Atkins, Lou (MRC)

ADDITIONAL INFO
REVISION

From: Howell, Beth (MRC)
Sent: Monday, June 27, 2016 1:13 PM
To: Atkins, Lou (MRC)
Subject: FW: JRWA - VWP 14-0343 - Minor Modification Request for Relocated Intake Structure
Attachments: JRWA - DEQ Minor Modification Request JUN16 w Exhibits.pdf

Importance: High

RECEIVED
JUN 27 2016
MARINE RESOURCES COMMISSION

From: Joe Hines [mailto:Joe.Hines@timmons.com]
Sent: Monday, June 27, 2016 10:35 AM
To: Kudlas, Scott (DEQ); McGurk, Brian (DEQ)
Cc: Vanderploeg, Steven A NAO (Steven.A.Vanderploeg@usace.army.mil); Owen, Randy (MRC); MRC - jpa Permits; Howell, Beth (MRC); Steve Nichols; Goodwin, Christian; Brendan Hefty (brendan@heftywiley.com); Pete Morris
Subject: JRWA - VWP 14-0343 - Minor Modification Request for Relocated Intake Structure

Scott & Brian,
Hope you both had a great weekend. On behalf of the James River Water Authority, please find attached a request for a minor modification to VWP Individual Permit Number 14-0343 for the relocated intake structure (approximately 250 LF upstream) on the James River.

If you have any questions, or need any additional information, please don't hesitate to reach out to us at your earliest convenience.

Best regards,
Joe

Joseph C. Hines, PE, MBA
Principal

TIMMONS GROUP | www.timmons.com
1001 Boulders Parkway, Suite 300 | Richmond, VA 23225
Office: 804.200.6380 | Fax: 804.560.1438
Mobile: 804.615.2162 | joe.hines@timmons.com
Your Vision Achieved Through Ours

TIMMONS GROUP
YOUR VISION ACHIEVED THROUGH OURS.

Additional Info/Revision

June 26, 2016

Mr. Scott Kudlas
Mr. Brian McGurk, PG
Office of Water Supply
Virginia Department of Environmental Quality
629 East Main Street
Richmond, VA 23219

RECEIVED
By Virginia Marine Resources Commission at 1:47 pm, Jun 27, 2016

Re: VWP Individual Permit Number 14-0343 - Minor Modification Request for Intake Relocation and Raw Water Transmission Line Extension
James River Water Supply Project, James River Water Authority

Dear Messrs. Kudlas and McGurk:

On behalf of the James River Water Authority (JRWA), we are requesting a minor modification to the above referenced permit, in accordance with VWP Regulation 9VAC25-210-180, for the relocation of the intake structure to approximately 250 linear feet upstream of the currently authorized location. We are also requesting VDEQ to allow the JRWA the option of open cut or directional drill the raw water line crossing at the Rivanna River.

In addition, as part of this minor modification, we are requesting that VDEQ authorize the construction of the raw water transmission pipe for the Louisa portion of the project, which will be constructed from the JRWA line at Rte 6 to the proposed Louisa Water Treatment Plant (Louisa WTP) located at Ferncliff, Virginia. Please note this was not authorized under the current permit.

Following is a summary of the impacts with changes noted with this request:

1. Intake Structure: Impacts to the James River associated with the construction of the intake structure are **0.90 acres (or 39,000 SF) and 485 linear feet of temporary impact (same as before)** and **0.080 acres (or 3,470 SF) and 64 linear feet of permanent impact.** Previous authorization allowed for impacts of 0.90 acres (485 linear feet) of temporary impact and 0.09 acres (64 linear feet) of permanent impact for the construction of the intake structure.

2. Raw Water Transmission: The total conversion impacts for construction of the raw water transmission pipe from the intake structure to the Louisa WTP are **0.082 acres (or 3,572 SF) for palustrine forested wetlands and 0.155 acres (or 6,744 SF) palustrine scrub-shrub wetlands for a total of 0.237 acres (or 10,316 SF)**. Previous authorization allowed for a permanent impact of 0.01 acres of palustrine forested wetlands associated with the construction of the raw water transmission pipe.

Impacts	Previously Authorized Impacts	Relocated Intake & Raw Water Transmission	Net Increase or (Decrease)
Intake Structure (JRWA)	0.09 acres	0.08 acres	(0.01) acres
Raw Water Transmission (JRWA & Louisa)	0.01 acres (JRWA only)	0.237 acres (JRWA and Louisa)	0.227 acres

Additional Info/Revision

We have included the following documents in support of this request with this letter:

1. Relocated intake and raw water line drawing for the JRWA portion of the project (to north of Rte 6)
2. Plan view showing pump station and intake
3. Relocated pump station and intake aerial drawing
4. Cross section for the raw water intake structure
5. Rivanna River crossing drawing

Due to file size, we will be providing the following additional information under separate cover via an FTP site:

1. Raw water line drawings for the Louisa portion of the project (from Rte 6 to the WTP at Ferncliff)
2. Wetlands delineation information submitted to the COE (COE has field verified these areas and should be issuing the Preliminary Jurisdictional Determination letter at any time)
3. Wetlands impacts summary with associated impact mapping for the entire project (JRWA and Louisa)

Thank you in advance for your consideration of this request. Should you have any questions or need any additional information, please don't hesitate to contact us at your earliest convenience.

Respectfully submitted,
Timmons Group

David J. Saunders, PE
Principal

Joseph C. Hines, PE, MBA
Principal

cc: Mr. Goodman B. Duke, Chairman of James River Water Authority
Mr. Steven M. Nichols, Fluvanna County Administrator
Mr. Christian Goodwin, Louisa County Administrator
Ms. Beth Howell, VMRC
Mr. Randy Owen, VMRC
Mr. Steven A. Vanderploeg, COE

Additional Info/Revision

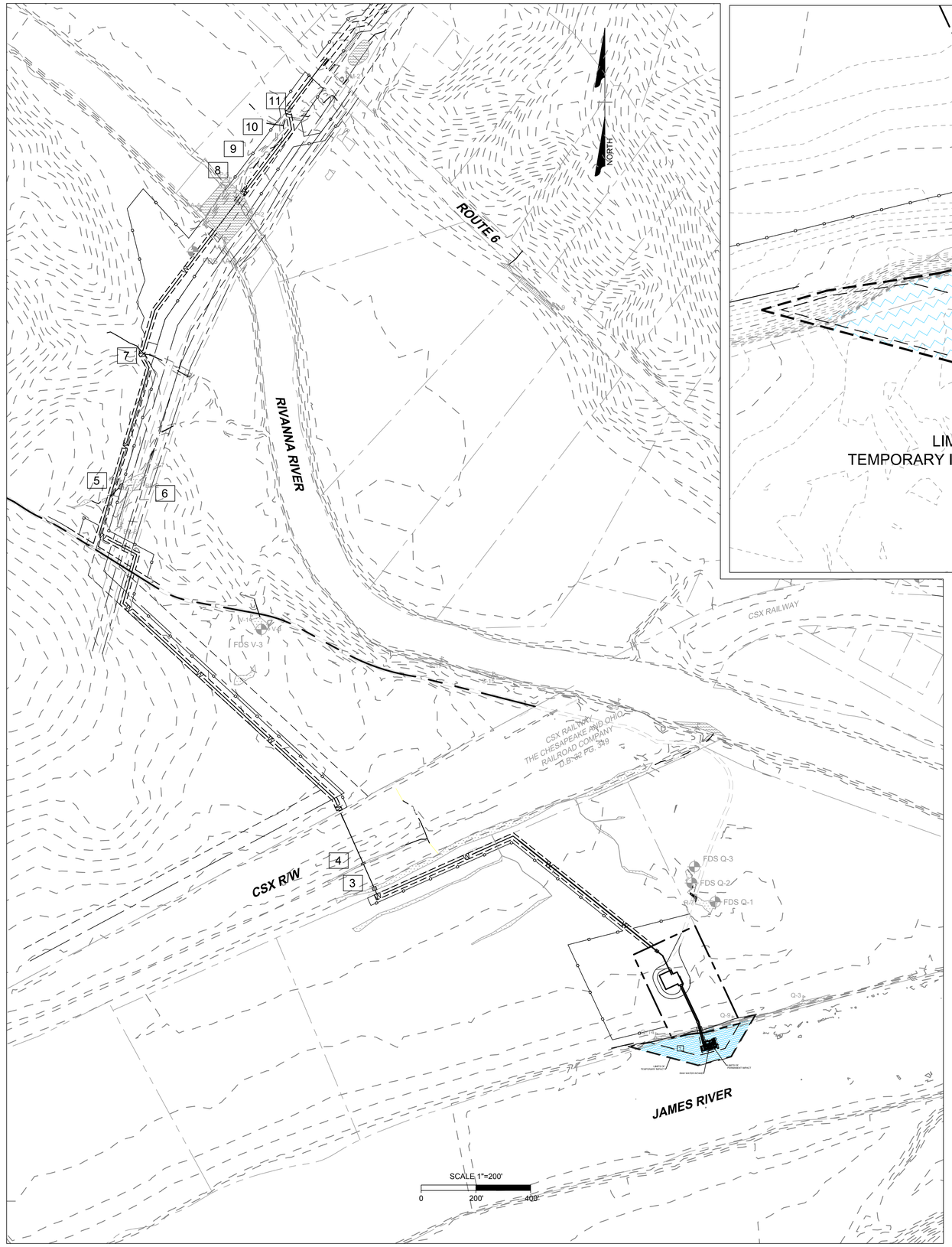

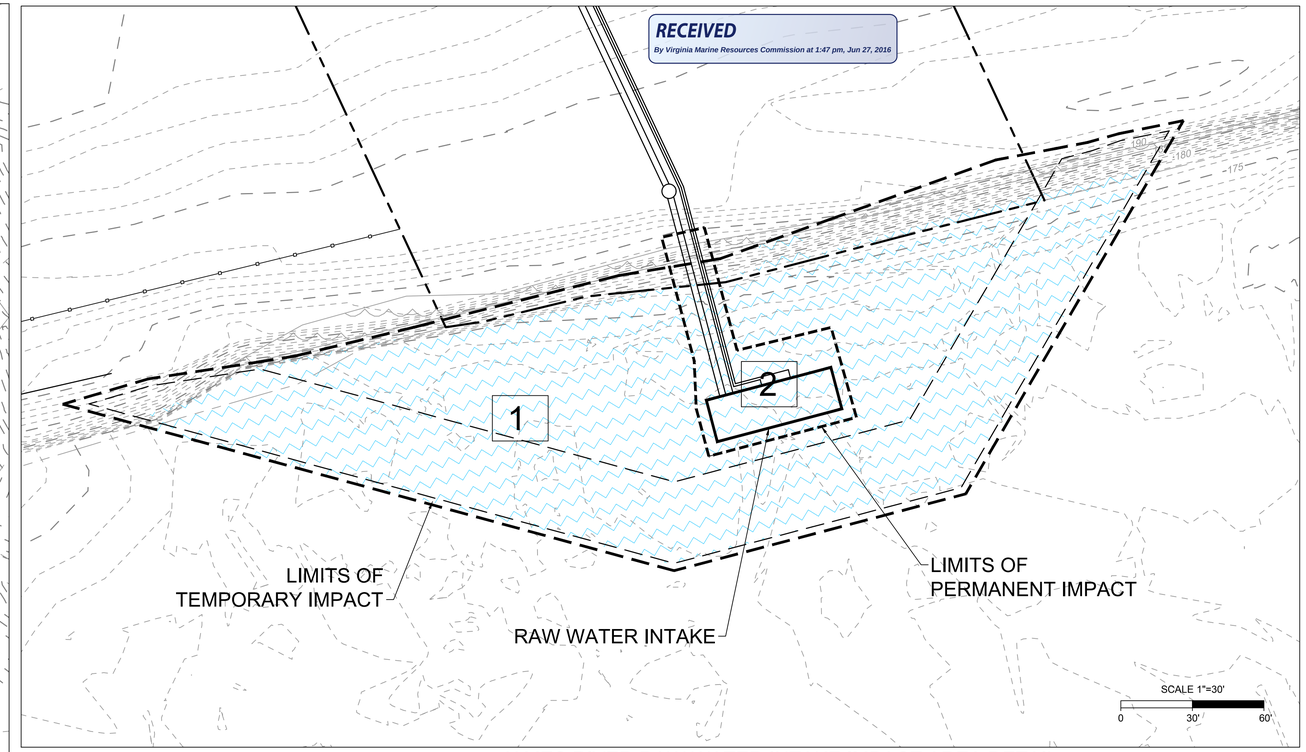

JAMES RIVER RAW WATER INTAKE IMPACT AREA DETAIL

WETLAND LEGEND

xx	WETLAND FLAG
XX	FIELD DATA STATION
xxX	SQUARE FEET
l.f.	LINEAR FEET
Ac.	ACRES
1	IMPACT LOCATION

Environmental Impacts Table - James River Water Authority

Project	Impact ID	Wetland (sq. ft) Impact: Construction Easement PEM	PSS	PFO	15' Maintained Easement PSS	PFO	Excavation/Fill PEM	PFO	Stream (lf and sq.ft.) Impact: Temporary L.F.	Sq.Ft.	Permanent L.F.	Sq. Ft.
JRWA	1								485	39,000		
	2										64	3,470
	3					161						
	4					94						
	5								43	172		
	6	195										
	7								24	120		
	8								190	28,218		
	9								320	1,280		
	10								70	210		
	11								80	400		
	Sub-Total	195	0	0	0	255	0	0	1,212	69,400	64	3,470
	Total	195 sq ft			255 sq ft		0 sq ft		1,212 lf	69,400 sq ft	64 lf	3,470 sq ft
		0.004 ac			0.006 ac		0.000 ac			1.593 ac		0.080 ac

* PFO=Palustrine Forested Wetland; PSS=Palustrine Scrub-Shrub Wetland; PEM=Palustrine Emergent Wetland

NOTE: REFER TO THE "PRELIMINARY JURISDICTIONAL WATERS OF THE U.S. MAP - DETAIL" SHEETS FOR ADDITIONAL INFORMATION OF EACH IMPACT AREA

RELOCATED INTAKE, PUMP STATION AND RAW WATER PIPELINE OWNED BY THE JRWA

NOTE: INTAKE STRUCTURE RELOCATED APPROX. 250 UPSTREAM

THIS DRAWING PREPARED AT THE CORPORATE OFFICE
1001 BOULDERS PARKWAY, SUITE 300, RICHMOND, VA 23225
TEL 804.200.6500 FAX 804.560.1016 www.timmons.com

YOUR VISION ACHIEVED THROUGH OURS.

TIMMONS GROUP

DATE	REVISION DESCRIPTION
5/18/2015	update for final VMRC/DEQ submission
6/26/2016	Update for Relocated Intake, PS & Pipeline

DATE: JUNE 2016
DRAWN BY: J. CARTER
DESIGNED BY: D. SAUNDERS
CHECKED BY: D. SAUNDERS
SCALE: AS SHOWN

JRWA RAW WATER INTAKE, PUMP STATION AND FORCE MAIN

FLUVANNA COUNTY, VIRGINIA

ENVIRONMENTAL IMPACT SUMMARY

JOB NO. 34967

SHEET NO. 1 OF 1

These plans and associated documents are the exclusive property of TIMMONS GROUP and may not be reproduced in whole or in part and shall not be used for any purpose whatsoever, inclusive, but not limited to construction, bidding, and/or construction staking without the express written consent of TIMMONS GROUP.

L:\201\34967 - JRWA Joint Permit Application\DWG\Sheet\Exhibit\34967C-RWPS-SITE.dwg | Plotted on 6/27/2016 9:41 AM | by Bruce Strickland

RECEIVED
By Virginia Marine Resources Commission at 1:47 pm, Jun 27, 2016

Additional Info/Revision

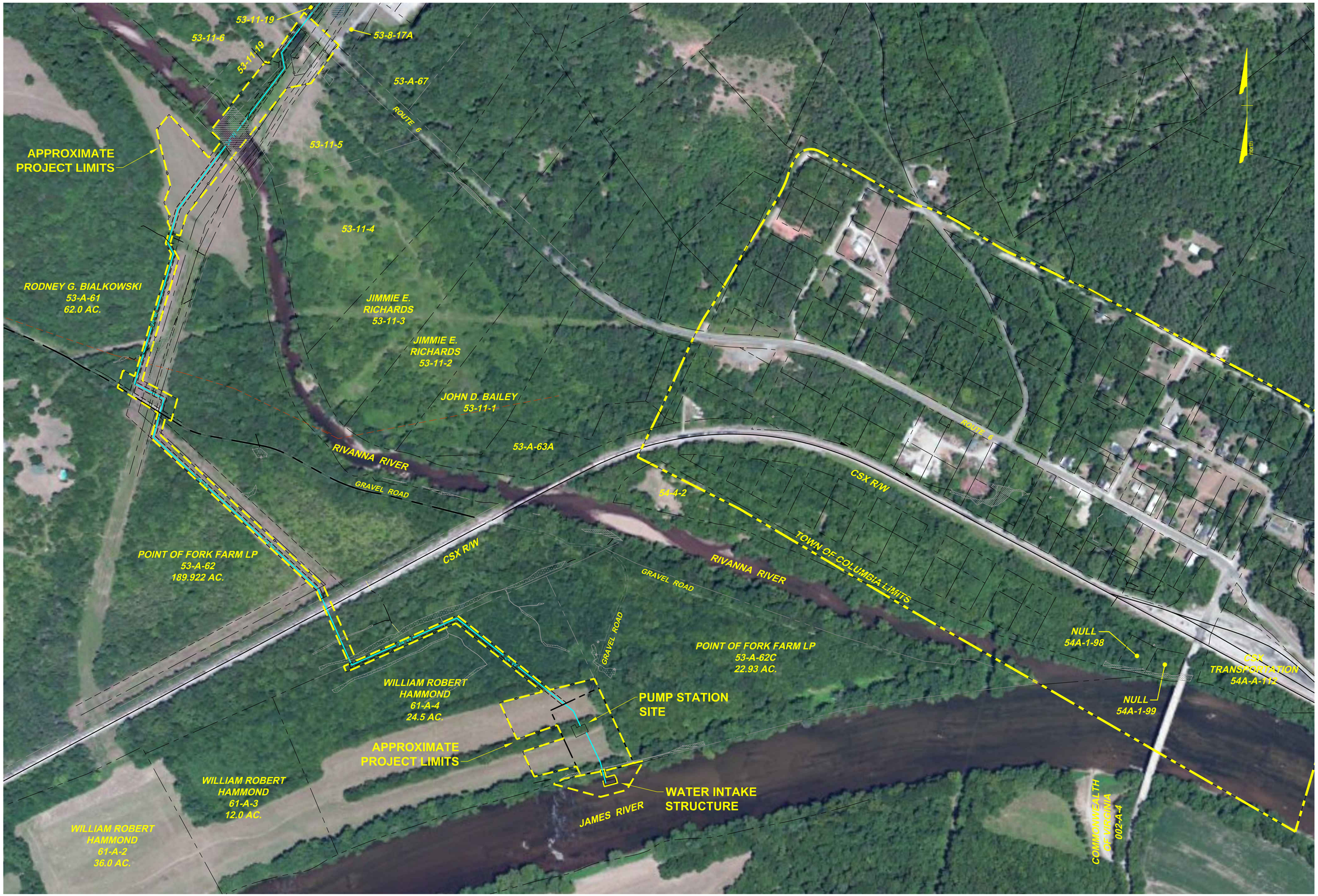

SCALE 1"=200'
0 200' 400'

APPROXIMATE PROJECT LIMITS

NOT FOR CONSTRUCTION

THIS DRAWING PREPARED AT THE CORPORATE OFFICE
1001 BOULDERS PARKWAY, SUITE 300, RICHMOND, VA 23225
TEL 804.200.6500 FAX 804.560.1016 www.timmons.com

YOUR VISION ACHIEVED THROUGH OURS.

TIMMONS GROUP

REVISION DESCRIPTION

DATE

DATE	6/23/2016
DRAWN BY	J. CARTER
DESIGNED BY	D. SAUNDERS
CHECKED BY	D. SAUNDERS
SCALE	AS SHOWN

JAMES RIVER WATER PROJECT
JAMES RIVER WATER AUTHORITY
RAW WATER INTAKE AND PUMP STATION

JOB NO. 34967
SHEET NO. SURV

These plans and associated documents are the exclusive property of TIMMONS GROUP and may not be reproduced in whole or in part and shall not be used for any purpose whatsoever, inclusive, but not limited to construction, bidding, and/or construction staking without the express written consent of TIMMONS GROUP.

L:\201\34967 - JRWA Joint Permit Application\DWG\Sheet\Exhibit\34967 - Adjacent Property Owner Exhibit (civil).dwg | Plotted on 6/23/2016 5:10 PM | by James Carter

Additional Info/Revision

RECEIVED
By Virginia Marine Resources Commission at 1:49 pm, Jun 27, 2016

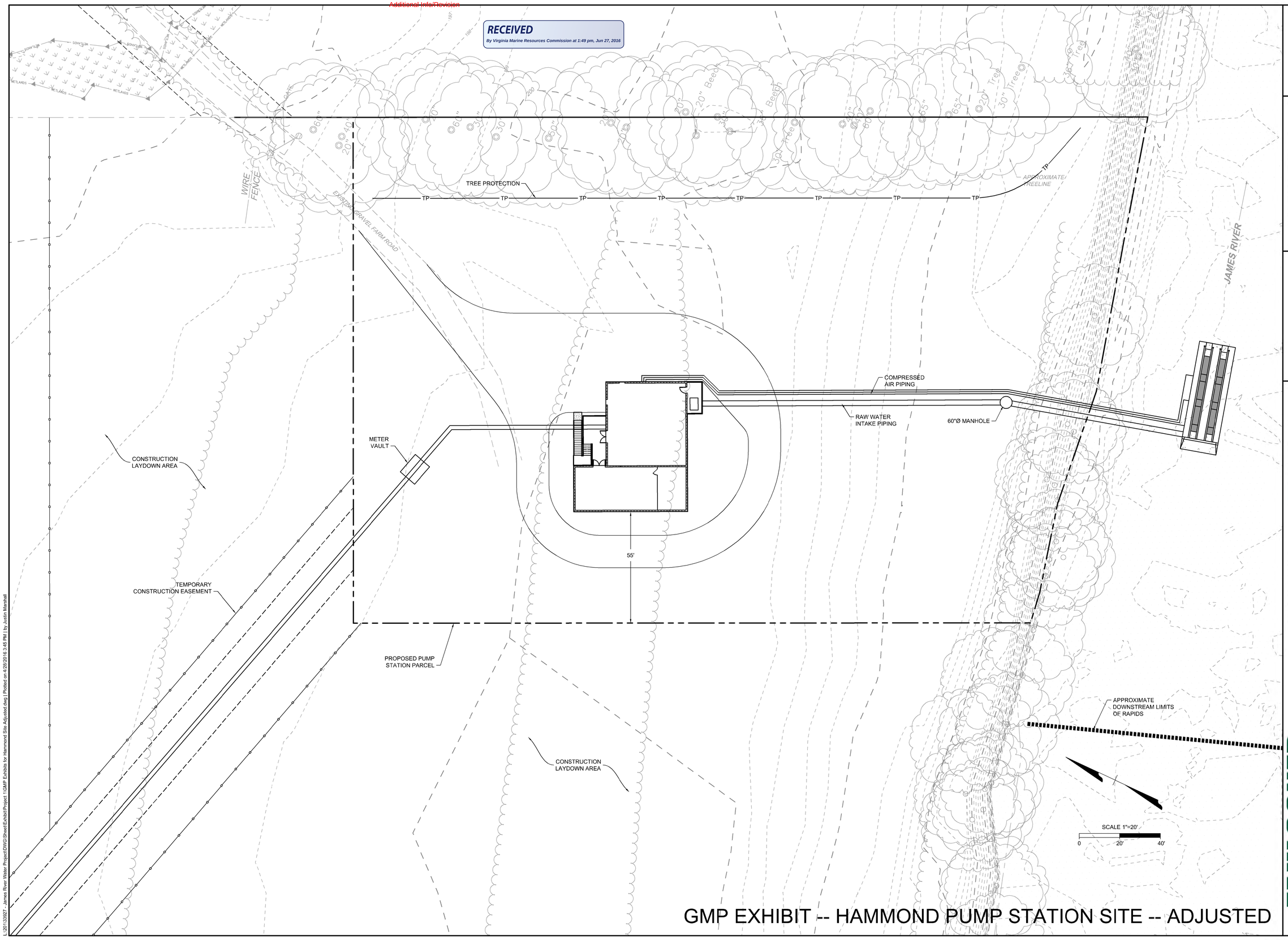

GMP EXHIBIT -- HAMMOND PUMP STATION SITE -- ADJUSTED

THIS DRAWING PREPARED AT THE
CORPORATE OFFICE
1001 Boulders Parkway, Suite 300 | Richmond, VA 23225
TEL 804.200.6500 FAX 804.560.1016 www.timmons.com

YOUR VISION ACHIEVED THROUGH OURS.

Site Development | Residential | Infrastructure | Technology

REVISION DESCRIPTION	DATE

DATE: 04-14-2016

DRAWN BY

DESIGNED BY

CHECKED BY

SCALE

MEB General Contractors

IN ASSOCIATION WITH **TIMMONS GROUP** AND

FAULCONER CONSTRUCTION COMPANY

JAMES RIVER WATER PROJECT - PROJECT 2 - PLAN SET A
24 INCH RAW WATER MAIN

JOB NO. 33927

SHEET NO.

These plans and associated documents are the exclusive property of TIMMONS GROUP and may not be reproduced in whole or in part and shall not be used for any purpose whatsoever, inclusive, but not limited to construction, bidding, and/or construction staking, without the express written consent of TIMMONS GROUP.

L:\201\33927 - James River Water Project\DWG\Sheet\Exhibit\Project 1\GMP Exhibits for Hammond Site Adjusted.dwg | Plotted on 4/26/2016 3:46 PM | by Justin Marshall

Additional Info/Revision

RECEIVED
By Virginia Marine Resources Commission at 1:49 pm, Jun 27, 2016

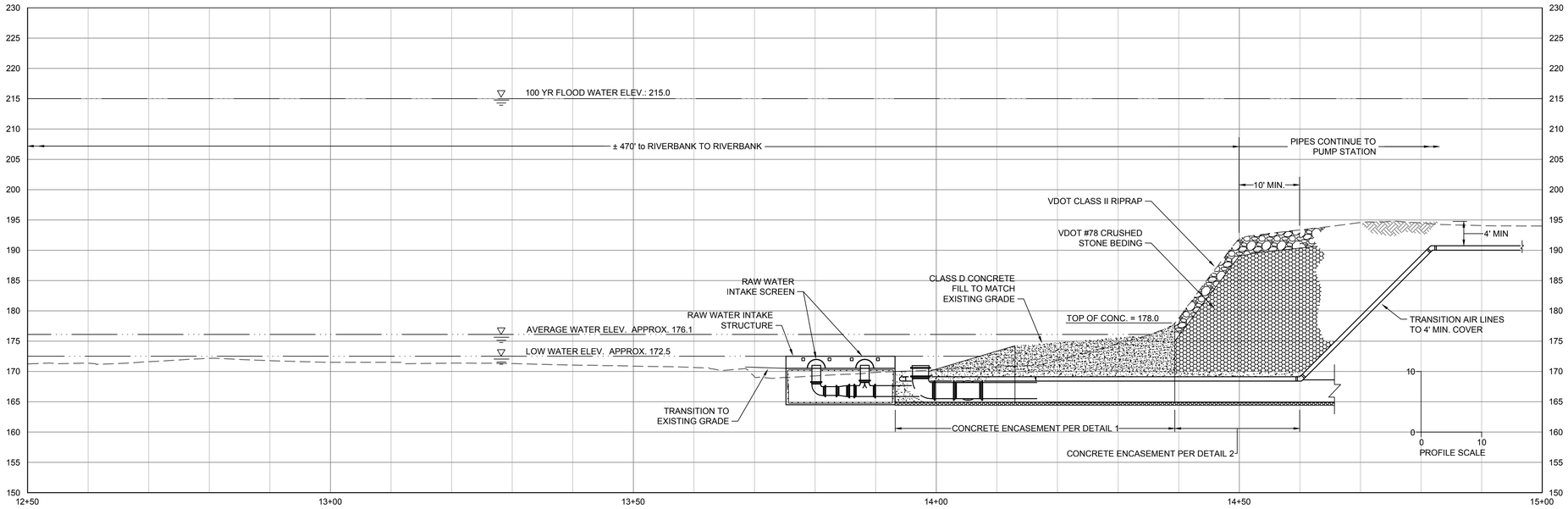

RAW WATER INTAKE PROFILE

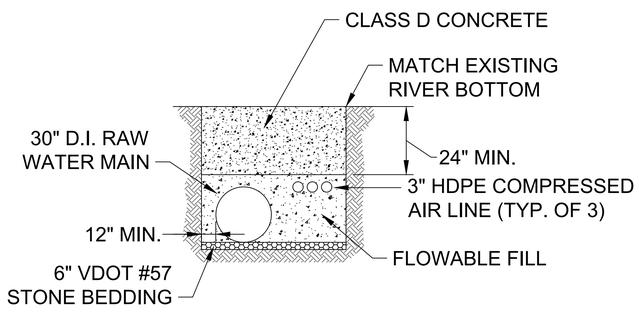

CONCRETE ENCASEMENT DETAIL 1

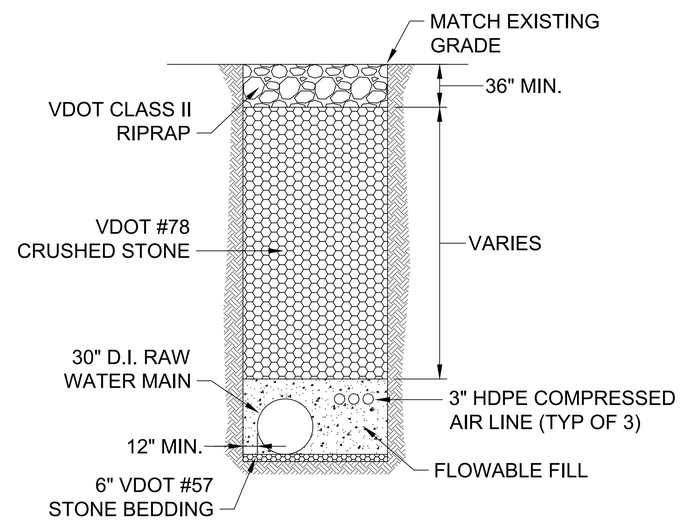

CONCRETE ENCASEMENT DETAIL 2

SCALE 1"=5'
0 5' 10'

THIS DRAWING PREPARED AT THE CORPORATE OFFICE
1001 Boulders Parkway, Suite 300 | Richmond, VA 23225
TEL 804.200.6500 FAX 804.560.1016 www.timmons.com

YOUR VISION ACHIEVED THROUGH OURS.

Site Development | Residential | Infrastructure | Technology

REVISION DESCRIPTION

DATE

DATE: MAY 2015
DRAWN BY: J. MARSHALL
DESIGNED BY: J. MARSHALL
CHECKED BY: D. SAUNDERS
SCALE

MEB General Contractors

TIMMONS GROUP AND IN ASSOCIATION WITH FAULCONER CONSTRUCTION COMPANY

JAMES RIVER WATER PROJECT

JAMES RIVER WATER AUTHORITY

INTAKE AND RIVER CROSS SECTION

JOB NO. 33927

SHEET NO. C-5

These plans and associated documents are the exclusive property of TIMMONS GROUP and may not be reproduced in whole or in part and shall not be used for any purpose whatsoever, inclusive, but not limited to construction, bidding, and/or construction staking without the express written consent of TIMMONS GROUP.

L:\2013\33927 - James River Water Project\DWG\Sheet\CD\W01.03 INTAKE AND RIVER CROSS SECTION.dwg | Plotted on 6/24/2016 4:31 PM | by James Carter

Additional Info/Revision

RECEIVED
By Virginia Marine Resources Commission at 1:50 pm, Jun 27, 2016

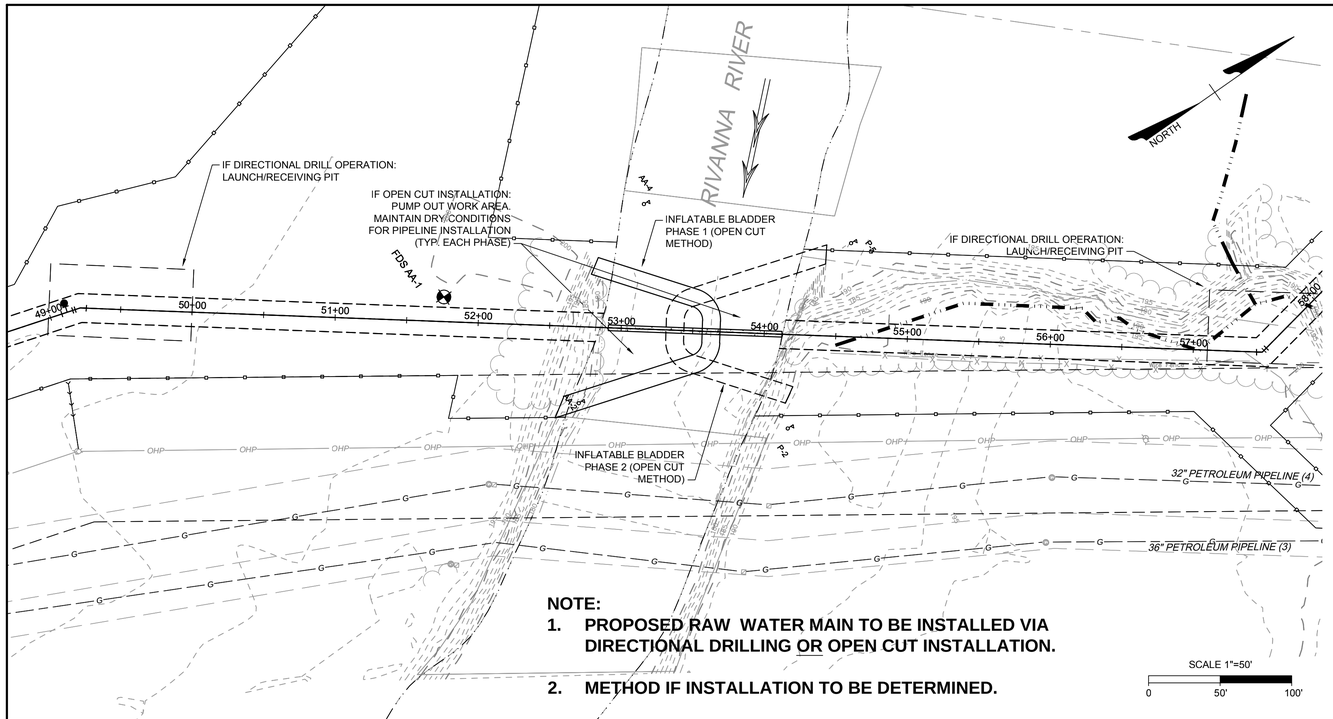

NOTE:

1. **PROPOSED RAW WATER MAIN TO BE INSTALLED VIA DIRECTIONAL DRILLING OR OPEN CUT INSTALLATION.**
2. **METHOD IF INSTALLATION TO BE DETERMINED.**

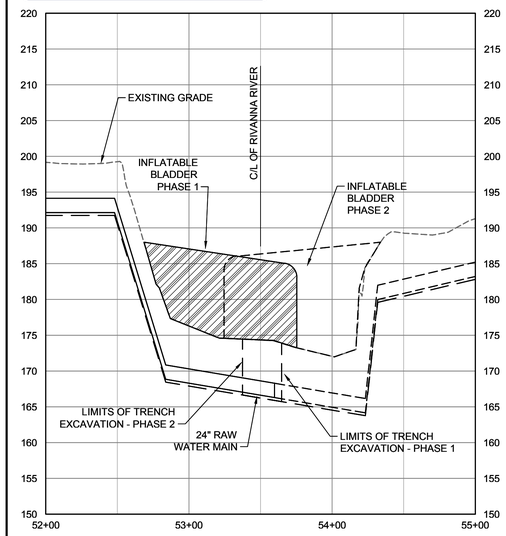

NOTES:

1. SUBMARINE (OPEN CUT) RIVER CROSSING OF THE PROPOSED RAW WATER MAIN SHALL CONFORM TO ALL VMRC SUBAQUEOUS GUIDELINES.
2. COMPLETE PIPE INSTALLATION IN ONE PHASE, INCLUDING ALL RESTORATION PRIOR TO THE BEGINNING THE NEXT PHASE PIPELINE INSTALLATION.

RIVER CROSSING COFFERDAM DETAIL

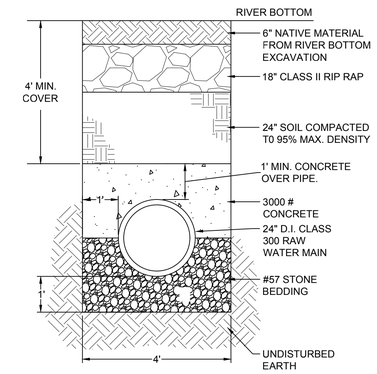

RIVER CROSSING PIPELINE CONCRETE CAP AND BACKFILL DETAIL

NOT TO SCALE

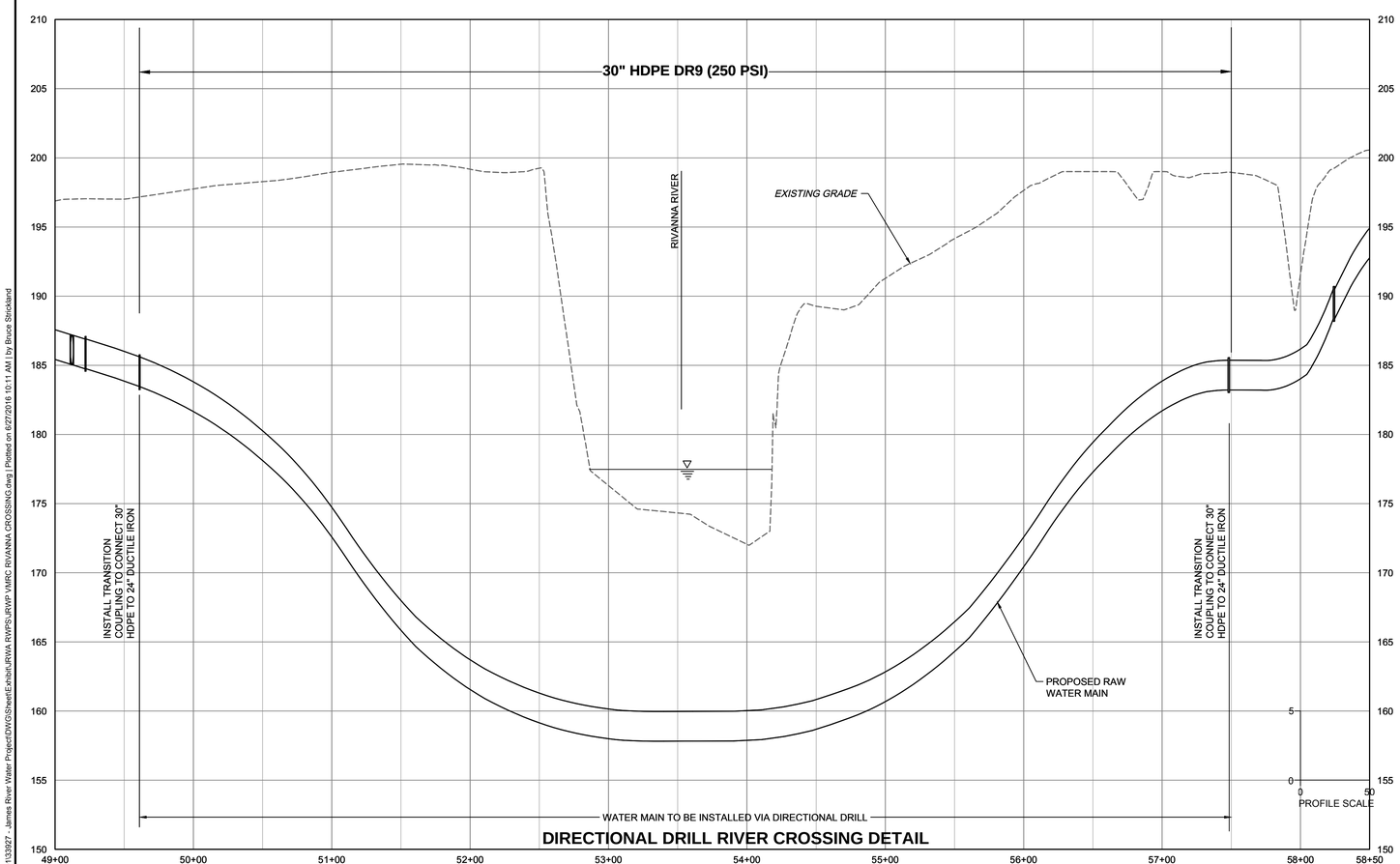

DIRECTIONAL DRILL RIVER CROSSING DETAIL

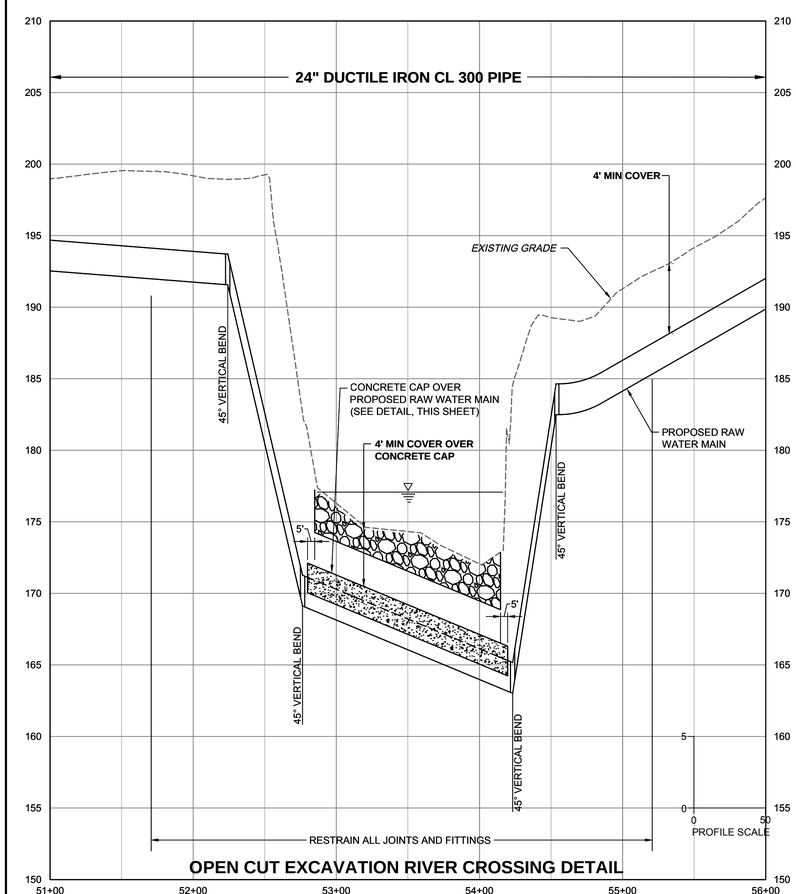

OPEN CUT EXCAVATION RIVER CROSSING DETAIL

THIS DRAWING PREPARED AT THE **CORPORATE OFFICE**
1001 Boulders Parkway, Suite 300 | Richmond, VA 23225
TEL 804.200.6500 FAX 804.560.1016 www.timmons.com

YOUR VISION ACHIEVED THROUGH OURS.

Site Development | Residential | Infrastructure | Technology

DATE	REVISION DESCRIPTION
6-23-2016	revised alignment

DATE	2-24-2016
DRAWN BY	J. CARTER
DESIGNED BY	D. SAUNDERS
CHECKED BY	D. SAUNDERS
SCALE	AS SHOWN

MEB General Contractors

TIMMONS GROUP AND **FAULCONER CONSTRUCTION COMPANY** IN ASSOCIATION WITH

JAMES RIVER WATER PROJECT

JAMES RIVER WATER AUTHORITY

RAW WATER MAIN RIVANNA RIVER CROSSING

JOB NO.	SHEET NO.
33927	VMRC 2

These plans and associated documents are the exclusive property of TIMMONS GROUP and may not be reproduced in whole or in part and shall not be used for any purpose whatsoever, inclusive, but not limited to construction, bidding, and/or construction staking without the express written consent of TIMMONS GROUP.

L:\2013\3927 - James River Water Project\DWG\SheetExhibit\JRWA RWPS\JRWP VMRC RIVANNA CROSSING.dwg | Plotted on 6/27/2016 10:11 AM | by Bruce Strickland