APPENDIX X

BRIDGE CROSSING DOCUMENTS

Received by VMRC September 1, 2020 /blh

General Sequence of Bridge Span Construction

The information located herein and in Appendix X, was received by TNT Environmental, Inc. via email on April 9, 2020 and May 7, 2020 from Mr. Joseph Fragale with Shirley Contracting Company, LLC.

1. Establish Perimeter E&S Controls
2. Cut Access Roads
3. Mobilize Bridge Crew
4. Install Stream Crossings - Temporary Bridges (2)
5. Drill, Set, Cast Pile
6. Form, Rebar, Pour, Strip Footing
7. Form, Rebar, Pour, Strip Columns / Walls
8. Backfill of Footings
9. Form, Rebar, Pour, Strip Cap / Beam Seats
10. Erect Bridge Beams
11. Form, Deck, Rebar, Pour, Cure, Strip Bridge Deck
12. Form, Rebar, Pour Strip Backwall
13. Backfill Abutments
14. Form, Rebar, Pour, Strip Approach Slab
15. Form, Rebar, Pour, Strip Median
16. Form, Rebar, Pour, Strip Parapets
17. Install CPSR
18. Strip Remaining Formwork
19. Point, Patch, and Rub
20. Demobilize Bridge Crews
21. Apply Stain
22. Final Stabilization
23. Remove Perimeter E&S Controls

Further, based on email correspondence with Mr. Fragale, the northern bridge crossing has been designed as a two span structure to minimize impacts to the 100 and 150 year floodplain, which the normal stream elevation passes through. The pier proposed on the southern bank of the North Fork of Broad Run, cannot be shifted as there is an existing Dominion Energy gas transmission easement located immediately adjacent to the area.

The use of cofferdams is not proposed for this project, as drilling operations for the piers will mainly be performed from existing grade, following the installation of silt fence in accordance with the approved CPAP. Once the piles have been drilled and casted, each footer will be excavated and reinforced. After concrete strength is achieved, and soils and slopes have been stabilized, the piers will be backfilled accordingly. It should also be noted that this project will not utilize scour protection measures as the foundations for both bridge crossings will be deep enough into non-scourable rock.

Received by VMRC September 1, 2020 /blh

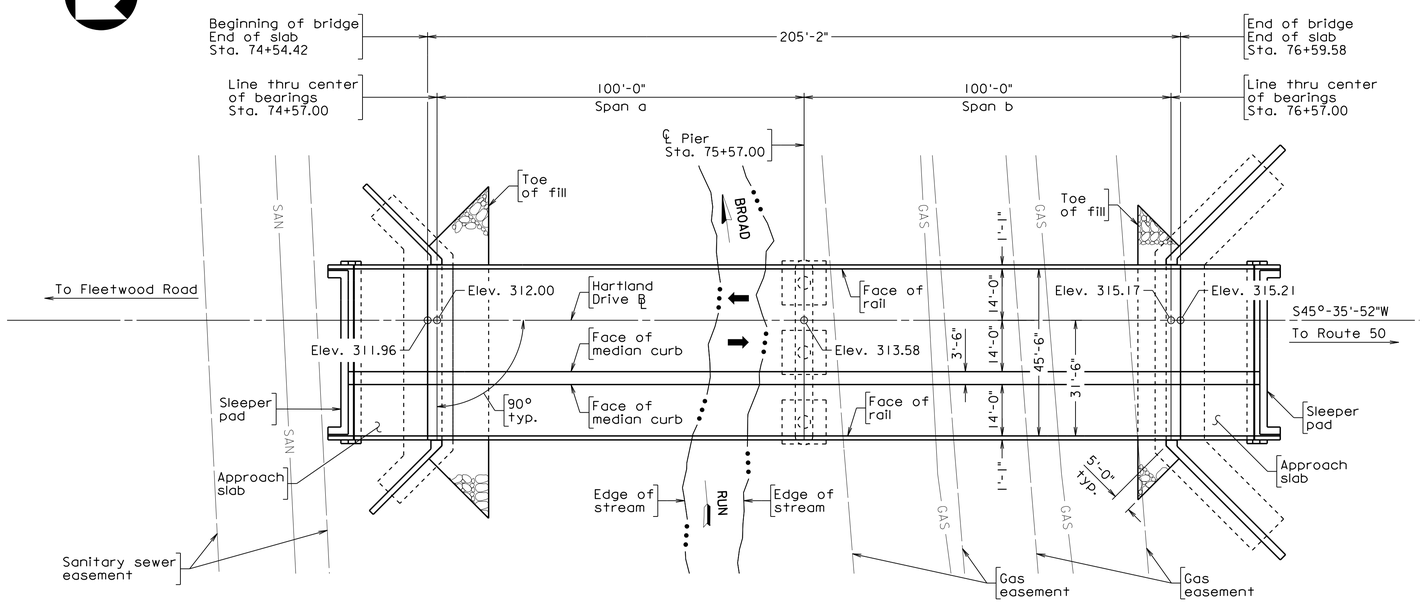

PLAN

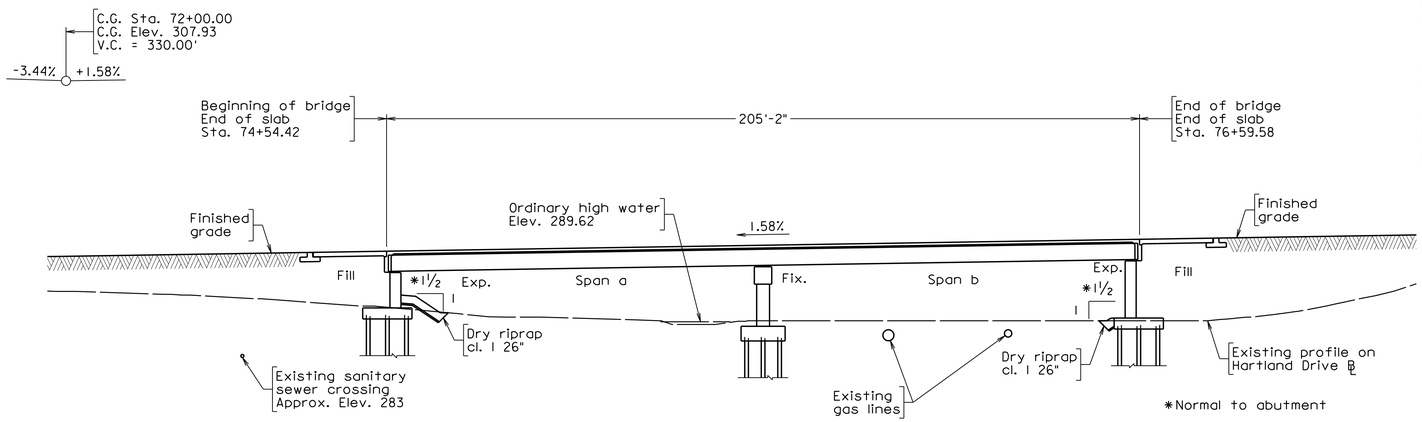

DEVELOPED SECTION ALONG ℄

Scale: 1" = 20'

DESIGN EXCEPTION(S):

None.

GENERAL NOTES:

Width: 45'-6" face-to-face of rails.

Span layout: 100'-0" - 100'-0" prestressed concrete 53" deep bulb-T beam spans continuous for live load.

Capacity: HL-93 loading.

Drainage area: 1.53 sq. mi.

Specifications:

Construction: Virginia Department of Transportation Road and Bridge Specifications, 2016.

Design: AASHTO LRFD Bridge Design Specifications, 8th Edition, 2017; and VDOT Modifications.

Standards: Virginia Department of Transportation Road and Bridge Standards, 2016; including all current revisions.

These plans are incomplete unless accompanied by the Supplemental Specifications and Special Provisions included in the contract documents.

Design loading includes 20 psf allowance for construction tolerances and construction methods.

Design loading includes 15 psf allowance for future wearing surface.

Concrete in deck, medians, rails, terminal walls and integral backwalls shall be Low Shrinkage Class A4 Modified in accordance with Section 217.12(a). Concrete in abutment and pier neats and footings shall be Class A3.

Prestressed concrete in bulb-T beams shall be Class A5 having a minimum compressive cylinder strength at 28 days equal to 8,000 psi and a minimum compressive cylinder strength at time of release of strands equal to 6,400 psi.

All reinforcing steel shall be deformed and shall conform to ASTM A615, Grade 60 except for steels noted as Corrosion Resistant Reinforcing (CRR) which shall conform to Section 223 of the Specifications. All reinforcing bar dimensions on the detailed drawings are to centers of bars except where otherwise noted and are subject to fabrication and construction tolerances.

CRR steels shall conform to one or more of the three Classes listed in Section 223 of the Specifications. The Class of CRR steel required on this project is noted on plan sheets. CRR Steel, Class II or Class III may be substituted for Class I.

Prestressing strands shall be uncoated, seven-wire, low-relaxation steel strands conforming to ASTM A416 Grade 270.

All H-piles shall be ASTM A709 Grade 50 steel and shall be installed in pre-bored holes. For minimum rock socket lengths and estimated tip elevations, see Pile Data Tables on sheets 8, 16 and 21.

The Bridge Data Plate shall be installed in accordance with VDOT's Road and Bridge Standards and obtained from the District Structure and Bridge Office.

BM: Benchmark #1 N 7036762.96448 E 11747045.73416. See sheet 7 of 35 in Roadway Plans.

PRELIMINARY PLANS

THESE PLANS NOT TO BE USED FOR CONSTRUCTION

Dewberry

Dewberry Engineers Inc.
8401 ARLINGTON BLVD.
FAIRFAX, VA 22031
PHONE: 703.849.0100
FAX: 703.849.0518

HARTLAND DRIVE OVER BROAD RUN
LOUDOUN COUNTY
CPAP-2020-0009

SEAL

DEWBERRY ENGINEERS INC.
FAIRFAX, VA
STRUCTURAL ENGINEER

No.	DATE	BY	Description

REVISIONS

DESIGNED BY	TPV
DRAWN BY	KLM
CHECKED BY	JRB
DATE	APRIL 2020

TITLE

TITLE SHEET: PLAN, PROFILE AND GENERAL NOTES

PROJECT NO. 50113885

XXX-XX

Received by VMRC September 1, 2020 /blh

ESTIMATED QUANTITIES - SUBSTRUCTURE ONLY

		Concrete Class A3 CY	Architectural Treatment SY	Reinforcing Steel LB	Steel Piles 12" LF	Steel Piles 14" LF	Pre-bore 24" LF	Rock Socket 24" LF	Struct. Excav. CY ⊗	Select Backfill (Abutment Zone) TON	Dry Riprap Class I 26" TON	Coffer dam EA	Geocomposite Wall Drain SY
Abutment A	Neat	XX	XX	XX	—	—	—	—	—	—	—	—	—
	Footing	XX	—	XX	XX	—	XX	XX	XX	XX	XX	XX	XX
Pier	Neat	XX	—	XX	—	—	—	—	—	—	—	—	—
	Footing	XX	—	XX	—	XX	XX	XX	XX	—	—	—	—
Abutment B	Neat	XX	XX	XX	—	—	—	—	—	—	—	—	—
	Footing	XX	—	XX	XX	—	XX	XX	XX	XX	XX	XX	XX
Total		XX	XX	XX	XX	XX	XX	XX	XX	XX	XX	XX	XX

⊗ Denotes items to be paid for on the basis of plan quantities in accordance with current Road and Bridge Specifications.

The cost of the T3 concrete shall be included in the price bid for Pre-bore 24" and Rock Socket 24".

The cost of pile base plates shall be included in the price for Steel Piles 12" and 14".

ESTIMATED QUANTITIES - SUPERSTRUCTURE ONLY

Item	Units	Quantities
Concrete Low Shrinkage Class A4 Mod.	CY	XX
Corrosion Resistant Reinf. Steel, Class I ⊗	LB	XX
Railing, CPSR 2 Rails ⊗	LF	XX
Architectural Treatment ⊗	SY	XX
Prestressed Concrete Beam, Bulb-T 53" Depth + 100' - 110'	EA	XX
Adhesive Based Joint Sealer (Class I) 2½"	LF	XX
Cover Depth Survey ⊗	SY	XX
Bridge Deck Grooving ⊗	SY	XX
Elastic Inclusion (12")	SY	XX
Concrete Class A4 Bridge Appr. Slab ⊗	CY	XX
Reinf. Steel Bridge Approach Slab ⊗	LB	XX

LUMP SUM BID ITEMS

Mobilization	LS
Construction Surveying	LS

INDEX OF SHEETS

Sheet No.	Description
1	Title Sheet, Plan, Profile, Design Exceptions and General Notes
2	Estimated Quantities and Index of Sheets
3	Substructure Layout and Slope Protection
4	Abutment A Plan and Elevation
5	Abutment A Semi-Integral Backwall Plan and Elevation
6	Abutment A Footing Plan
7	Abutment A Sections and Details - 1
8	Abutment A Sections and Details - 2
9	Abutment A Wingwall Elevations
10	Abutment A Wingwall Sections
11	Abutment A Semi-Integral Backwall Sections
12	Abutment B Plan and Elevation
13	Abutment B Semi-Integral Backwall Plan and Elevation
14	Abutment B Footing Plan
15	Abutment B Sections and Details - 1
16	Abutment B Sections and Details - 2
17	Abutment B Wingwall Elevations
18	Abutment B Wingwall Sections
19	Abutment B Semi-Integral Backwall Sections
20	Pier Plan and Elevation
21	Pier Footing Plan and Details
22	Prestressed Beam Bearing Details
23	Transverse Section and Details
24	Erection Diagram
25	Prestressed Concrete Bulb-T PCBT 53 - Span a
26	Prestressed Concrete Bulb-T PCBT 53 - Span b
27	Prestressed Concrete Bulb-T Miscellaneous Beam Details - 1
28	Prestressed Concrete Bulb-T Miscellaneous Beam Details - 2
29	Prestressed Concrete Bulb-T Intermediate Diaphragm Details
30	Prestressed Concrete Bulb-T Closure Diaphragm Details
31	Top of Slab Elevations
32	Deck Slab Plan
33	42" - CPSR Railing with Architectural Treatment
34	CPSR Rail Splice Details
35	42" - CPSR Terminal Wall with Architectural Treatment - 1
36	42" - CPSR Terminal Wall with Architectural Treatment - 2
37	Architectural Treatment for CPSR Railing
38	Abutment A Approach Slab
39	Abutment B Approach Slab
40	Sleeper Pad and Joint Details
41	Engineering Geology - 1
42	Engineering Geology - 2
43	Engineering Geology - 3
44	Engineering Geology - 4
45	Engineering Geology - 5
46	Engineering Geology - 6
47	Engineering Geology - 7
48	Engineering Geology - 8
49	Engineering Geology - 9

Rev. No.	Sheets Revised	Date

TABLE OF REVISIONS

PRELIMINARY PLANS

THESE PLANS NOT TO BE USED FOR CONSTRUCTION

Dewberry

Dewberry Engineers Inc.
8401 ARLINGTON BLVD.
FAIRFAX, VA 22031
PHONE: 703.849.0100
FAX: 703.849.0518

HARTLAND DRIVE OVER BROAD RUN
LOUDOUN COUNTY
CPAP-2020-0009

SEAL

DEWBERRY ENGINEERS INC.
FAIRFAX, VA
STRUCTURAL ENGINEER

No.	DATE	BY	Description

REVISIONS

DESIGNED BY MM
DRAWN BY JPD
CHECKED BY JRB
DATE APRIL 2020

TITLE

ESTIMATED QUANTITIES AND INDEX OF SHEETS

PROJECT NO. 50113885

XXX-XX

SHEET NO. 2 of 49

Received by VMRC September 1, 2020 /blh

Notes:

This layout is to be used only for the purpose of locating fill slopes and footings. For details not shown, see abutment and pier details.

The Contractor and his Engineer shall determine the methods and means of support required for the loads imposed by the roadway, traffic, structure and any loads imposed by the construction equipment during construction of the project. Working drawings and calculations shall be submitted to the Engineer for review and approval.

Material in the abutment select backfill zone shall be VDOT #2 or #3 stone and shall be compacted in accordance with Sections 303 and 304 of the VDOT Road and Bridge Specifications.

= Boring locations, for details see sheets 41 thru 49.

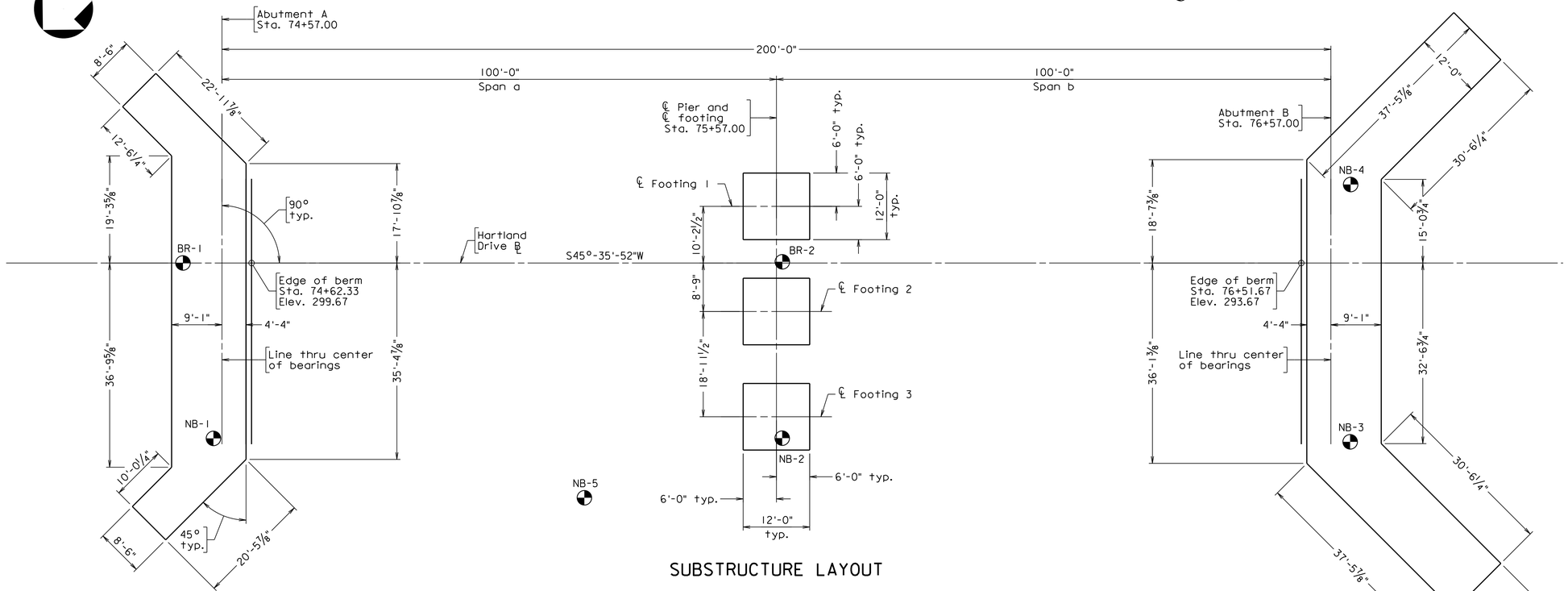

SUBSTRUCTURE LAYOUT

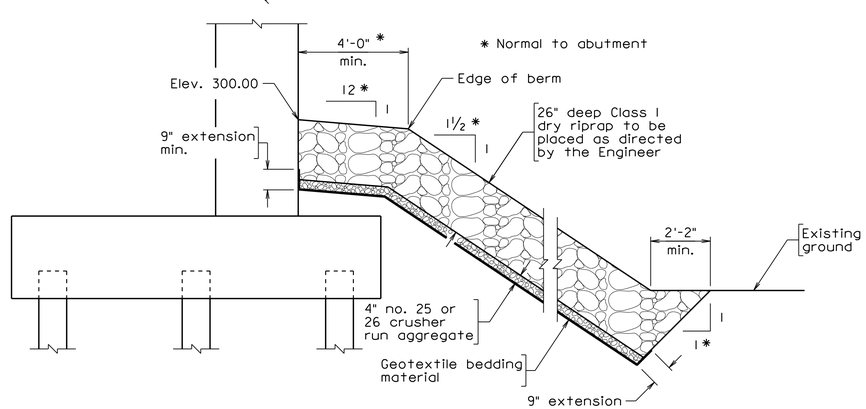

RIPRAP SLOPE PROTECTION AT ABUTMENT A

Not to scale

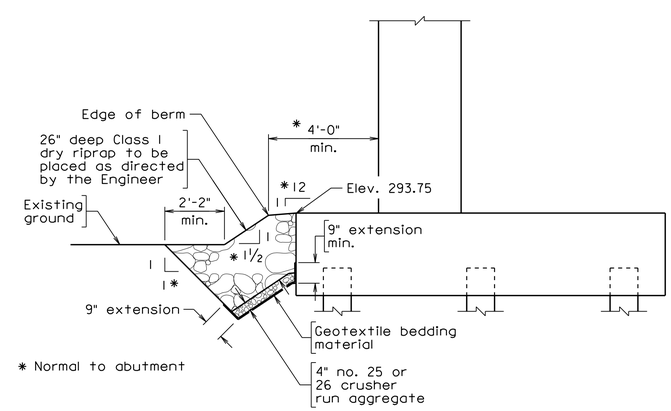

RIPRAP SLOPE PROTECTION AT ABUTMENT B

Not to scale

Scale: 3/32" = 1'-0" unless otherwise noted

PRELIMINARY PLANS

THESE PLANS NOT TO BE USED FOR CONSTRUCTION

Dewberry

Dewberry Engineers Inc.
8401 ARLINGTON BLVD.
FAIRFAX, VA 22031
PHONE: 703.849.0100
FAX: 703.849.0518

HARTLAND DRIVE OVER BROAD RUN

LOUDOUN COUNTY

CPAP-2020-0009

SEAL

DEWBERRY ENGINEERS INC.
FAIRFAX, VA
STRUCTURAL ENGINEER

No.	DATE	BY	Description

REVISIONS

DESIGNED BY KLM

DRAWN BY JPD

CHECKED BY PCA

DATE APRIL 2020

TITLE

SUBSTRUCTURE LAYOUT AND SLOPE PROTECTION

PROJECT NO. 50113885

XXX-XX

SHEET NO. 3 of 49

Received by VMRC September 1, 2020 /blh

Notes:

For details of semi-integral backwall, see sheets 5 and 11.

For wingwall details, see sheets 9 and 10.

E.F. denotes each face

N.F. denotes near face

F.F. denotes far face

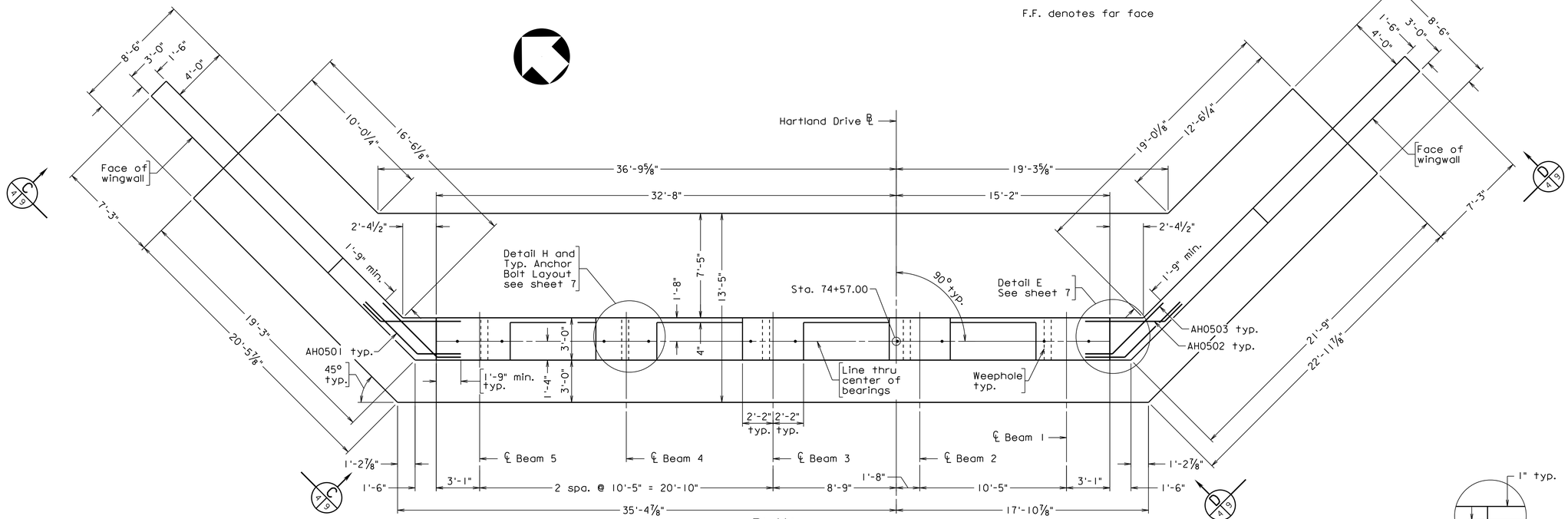

PLAN

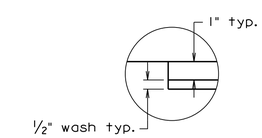

DETAIL 1

Scale: 3" = 1'-0"

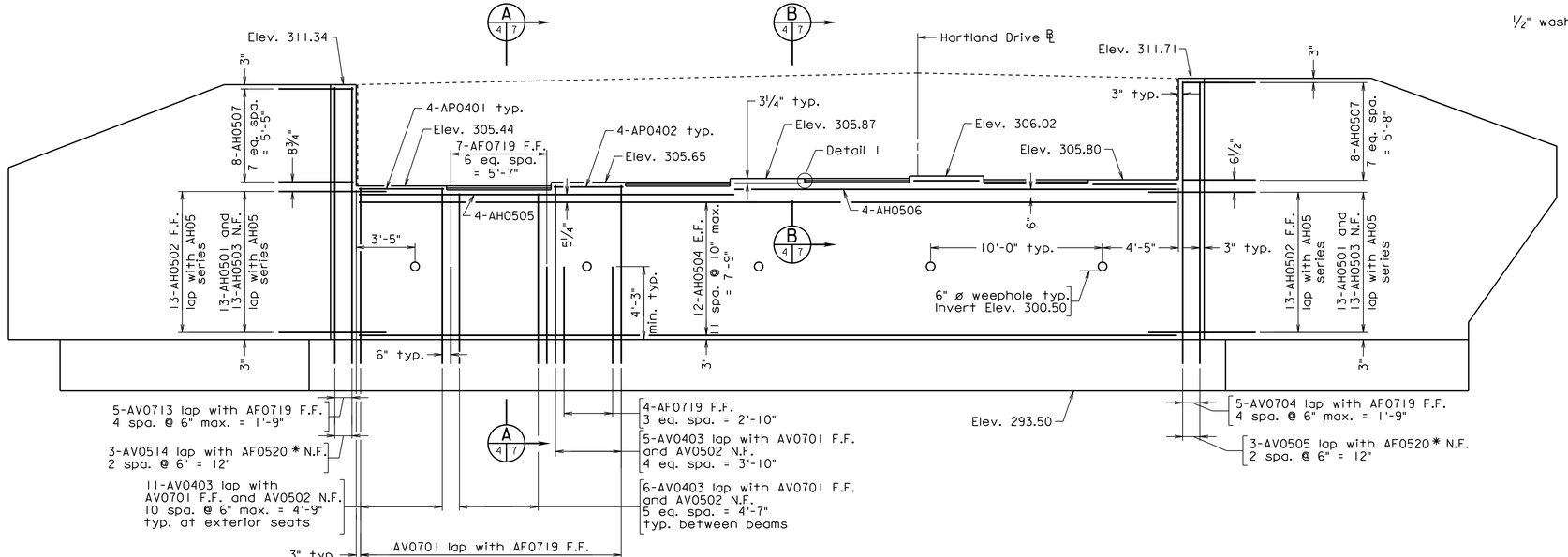

ELEVATION

Piles not shown

*Minimum Lap = 1'-9"

Scale: ¼" = 1'-0" unless otherwise noted

PRELIMINARY PLANS

THESE PLANS NOT TO BE USED FOR CONSTRUCTION

Dewberry

Dewberry Engineers Inc.
8401 ARLINGTON BLVD.
FAIRFAX, VA 22031
PHONE: 703.849.0100
FAX: 703.849.0518

HARTLAND DRIVE OVER BROAD RUN

LOUDOUN COUNTY

CPAP-2020-0009

SEAL

DEWBERRY ENGINEERS INC.
FAIRFAX, VA
STRUCTURAL ENGINEER

No.	DATE	BY	Description

REVISIONS

DESIGNED BY TPV

DRAWN BY TPV

CHECKED BY PCA

DATE APRIL 2020

TITLE

ABUTMENT A PLAN AND ELEVATION

PROJECT NO. 50113885

XXX-XX

SHEET NO. 4 of 49

Received by VMRC September 1, 2020 /blh

Notes:

Integral backwall concrete shall be placed and cured to a minimum compressive strength of 3000 psi prior to placement of deck concrete.

Backfill operations above seat level shall not be started until deck has been placed and cured to a minimum compressive strength of 3000 psi. Backfill shall be placed such that the differential in fill height between both abutments does not exceed 6" after compaction.

For details of holes through the web and location and number of BC series bars, see sheet 28.

The integral backwalls shall be cast when the least thermal movement of the superstructure can be expected during the period of initial set of the concrete in the backwall, e.g. at dusk or during an expected uniformly cloudy day.

Forms for the backwall shall be attached to the beams only; the forms shall not be attached to or blocked against the abutment stem. The backwall and forms must be free to move in relation to the abutment.

All reinforcement in the abutment backwall shall be Corrosion Resistant Reinforcing Steel, Class I.

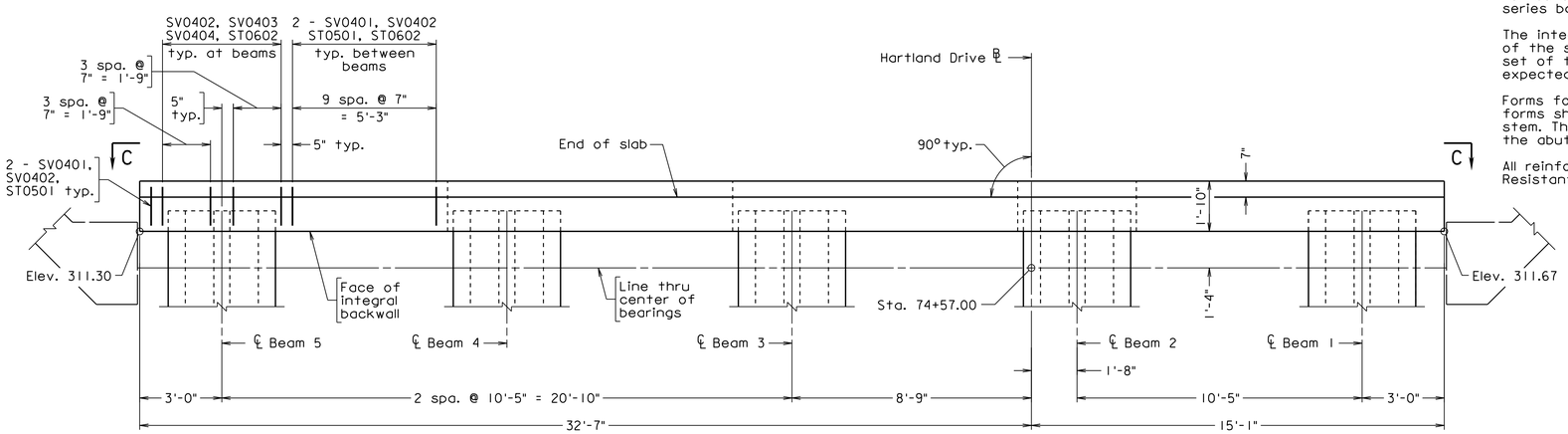

PLAN

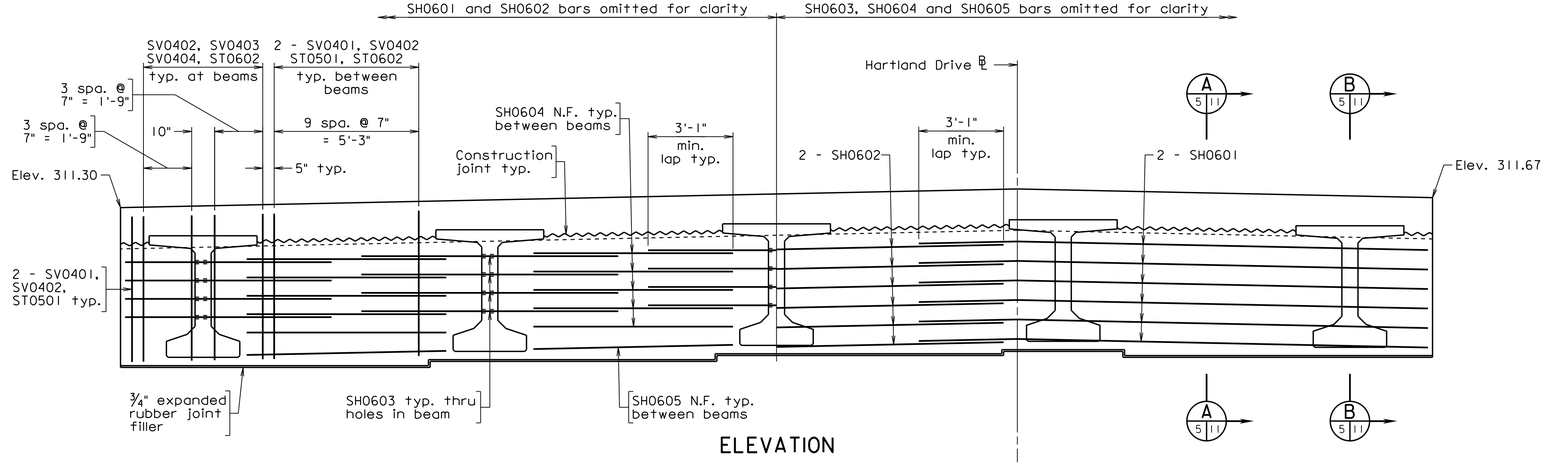

ELEVATION

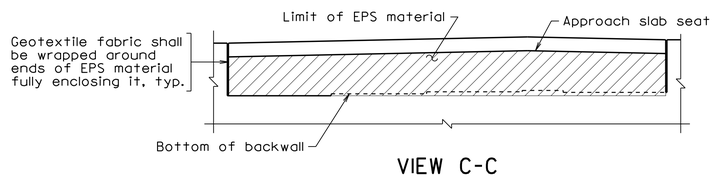

VIEW C-C
Not to scale

PRELIMINARY PLANS
THESE PLANS NOT TO BE USED FOR CONSTRUCTION

Scale: ⅜" = 1'-0" unless otherwise noted

Dewberry

Dewberry Engineers Inc.
8401 ARLINGTON BLVD.
FAIRFAX, VA 22031
PHONE: 703.849.0100
FAX: 703.849.0518

HARTLAND DRIVE OVER BROAD RUN
LOUDOUN COUNTY
CPAP-2020-0009

SEAL

DEWBERRY ENGINEERS INC.
FAIRFAX, VA
STRUCTURAL ENGINEER

No.	DATE	BY	Description

REVISIONS

DESIGNED BY	KLM
DRAWN BY	KLM
CHECKED BY	EJA
DATE	APRIL 2020

TITLE
ABUTMENT A SEMI-INTEGRAL BACKWALL PLAN AND ELEVATION

PROJECT NO. 50113885

XXX-XX

SHEET NO. 5 of 49

Received by VMRC September 1, 2020 /blh

Notes:

All reinforcing bars in abutment footings shall be black steel.

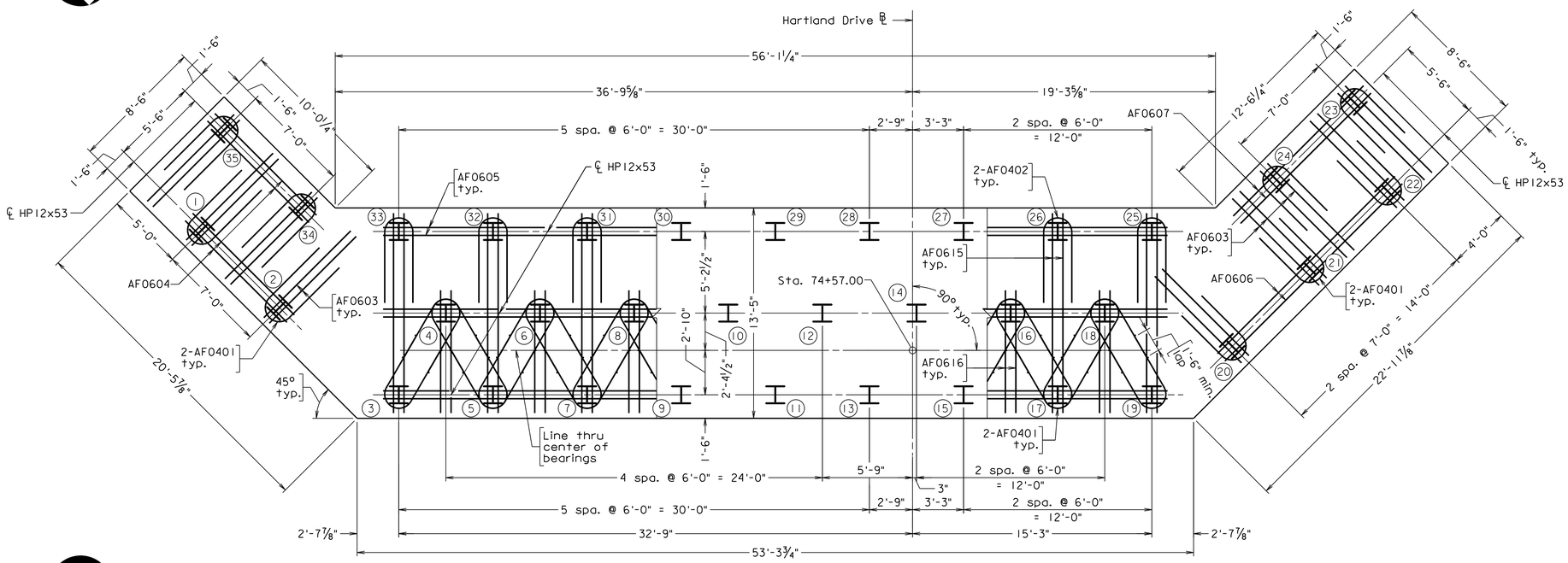

PILE LAYOUT AND PILE REINFORCEMENT PLAN

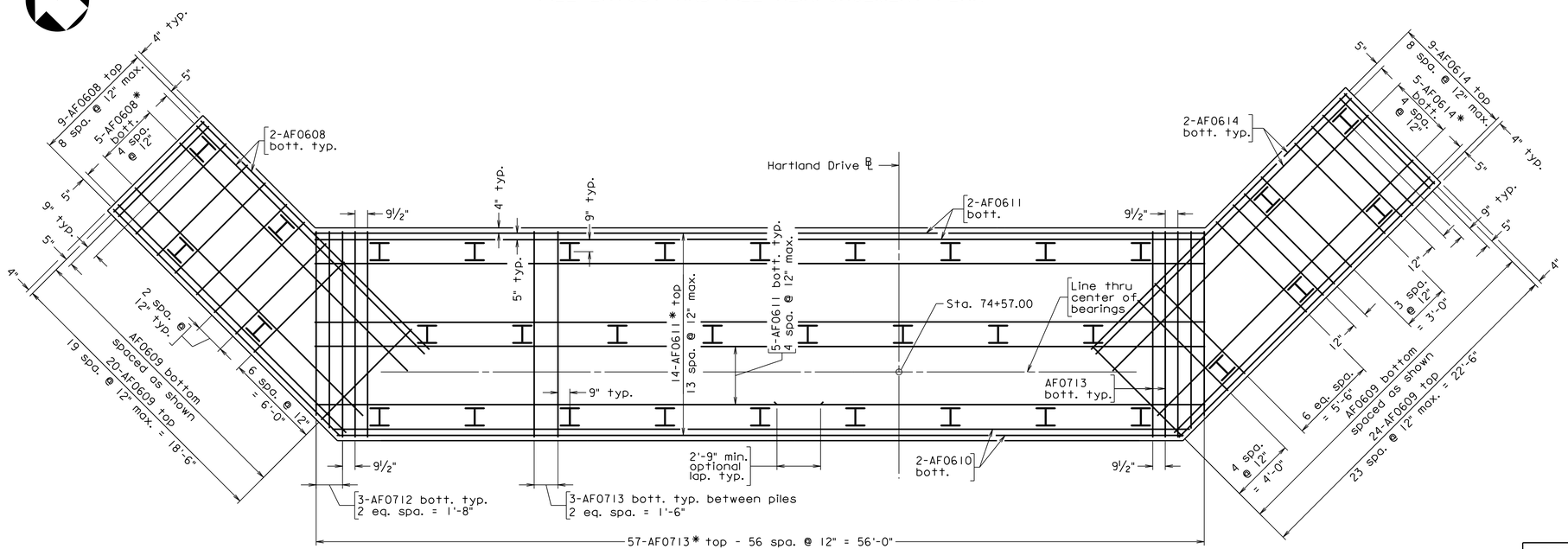

FOOTING REINFORCEMENT PLAN

* Cut in field as necessary.

Scale: ¼" = 1'-0"

PRELIMINARY PLANS

THESE PLANS NOT TO BE USED FOR CONSTRUCTION

Dewberry

Dewberry Engineers Inc.
8401 ARLINGTON BLVD.
FAIRFAX, VA 22031
PHONE: 703.849.0100
FAX: 703.849.0518

HARTLAND DRIVE OVER BROAD RUN

LOUDOUN COUNTY

CPAP-2020-0009

SEAL

DEWBERRY ENGINEERS INC.
FAIRFAX, VA
STRUCTURAL ENGINEER

No.	DATE	BY	Description

REVISIONS

DESIGNED BY	TPV
DRAWN BY	TPV
CHECKED BY	PCA
DATE	APRIL 2020

TITLE

ABUTMENT A FOOTING PLAN

PROJECT NO. 50113885

XXX-XX

SHEET NO. 6 of 49

Received by VMRC September 1, 2020 /blh

Notes:

For details of semi-integral backwall, see sheets 5 and 11.

All reinforcing bars in the abutment footing and neatwork shall be black steel.

For anchor bolt sleeve details, see bearing details on sheet 22.

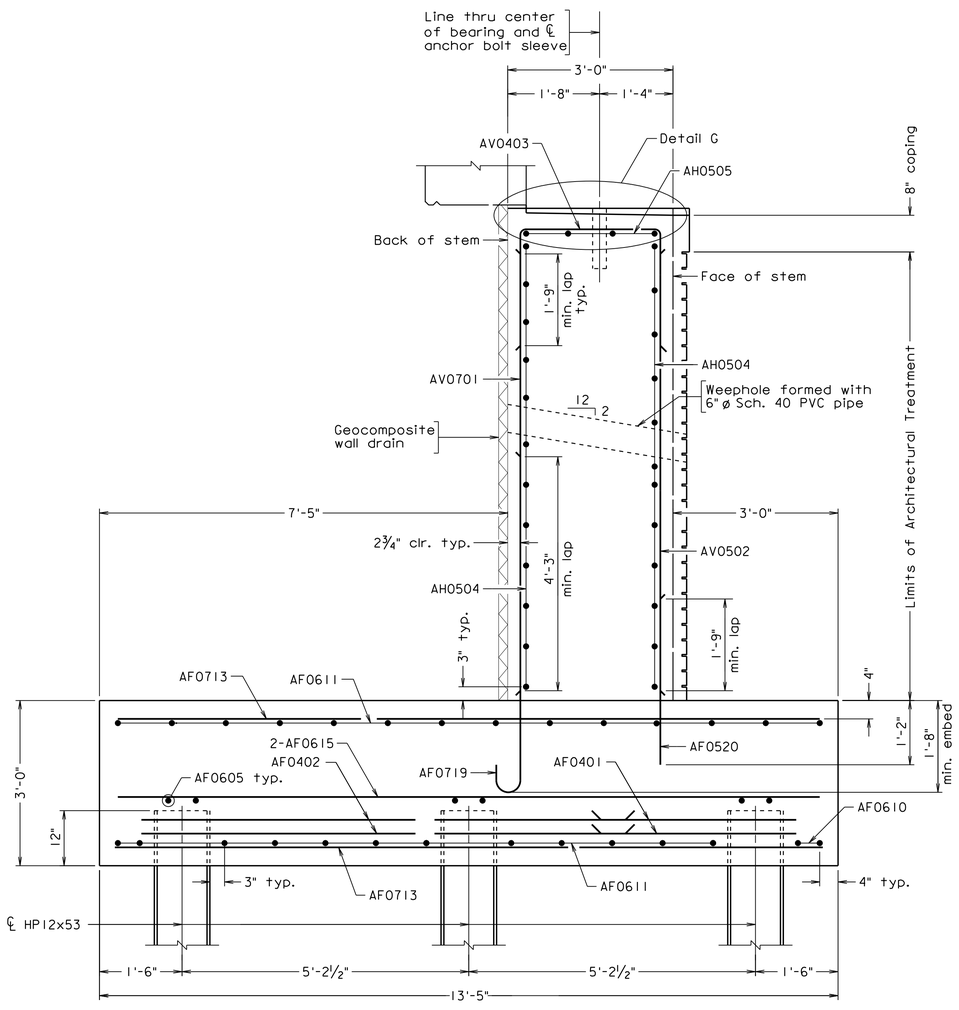

SECTION A (4 | 7)

Pre-bored holes for piles not shown.
See sheet 8 for details

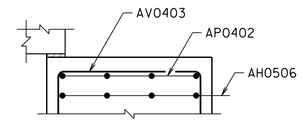

SECTION B (4 | 7)

Scale: 1½" = 1'-0"

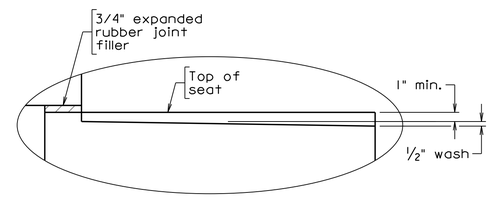

DETAIL G

Scale: 1½" = 1'-0"

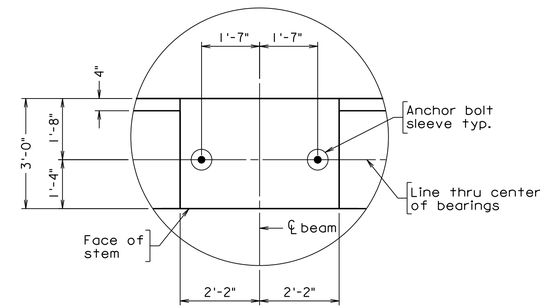

DETAIL H AND TYP. ANCHOR BOLT LAYOUT

Scale: ½" = 1'-0"

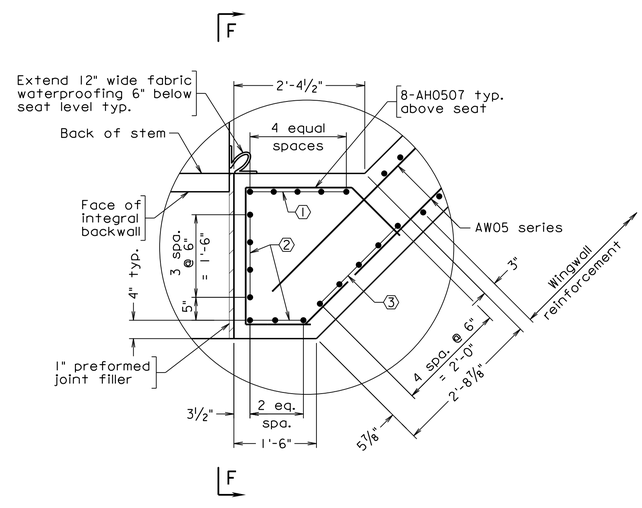

DETAIL E

① AV0704 @ East Wingwall
AV0713 @ West Wingwall

② AV0505 @ East Wingwall
AV0514 @ West Wingwall

③ AV0506 @ West Wingwall
AV0515 @ East Wingwall

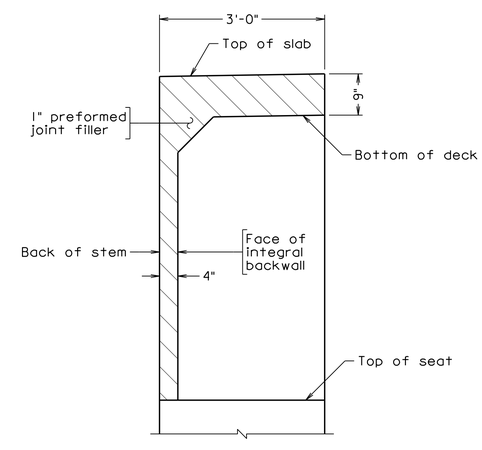

SECTION F-F

PRELIMINARY PLANS

THESE PLANS NOT TO BE USED FOR CONSTRUCTION

Scale: ¾" = 1'-0" unless otherwise noted

Dewberry

Dewberry Engineers Inc.
8401 ARLINGTON BLVD.
FAIRFAX, VA 22031
PHONE: 703.849.0100
FAX: 703.849.0518

HARTLAND DRIVE OVER BROAD RUN

LOUDOUN COUNTY

CPAP-2020-0009

SEAL

DEWBERRY ENGINEERS INC.
FAIRFAX, VA
STRUCTURAL ENGINEER

No.	DATE	BY	Description

REVISIONS

DESIGNED BY TPV
DRAWN BY TPV
CHECKED BY PCA
DATE APRIL 2020

TITLE

ABUTMENT A SECTIONS AND DETAILS - 1

PROJECT NO. 50113885

XXX-XX

SHEET NO. 7 of 49

Received by VMRC September 1, 2020 /blh

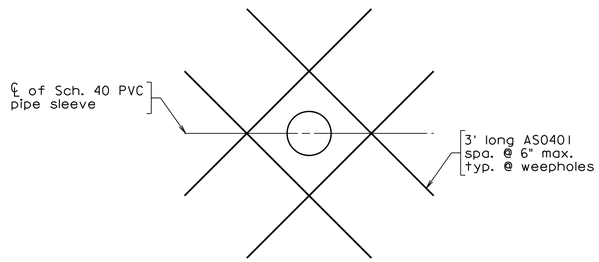

TYPICAL REINFORCEMENT AT WEEPHOLE

Not to scale

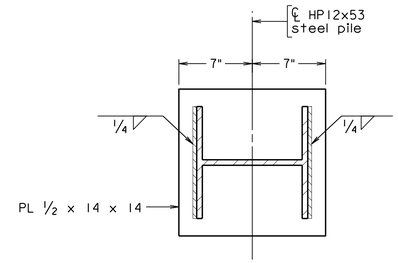

BASE PLATE DETAIL

Notes:

All reinforcing bars in the abutment footing and neatwork shall be black steel.

Material in the abutment select backfill zone shall be VDOT #2 or #3 stone and shall be compacted in accordance with Sections 303 and 305 of the VDOT Road and Bridge Specifications.

The final 1'-3" depth of the embankment side slopes shall be regular embankment material placed and finished as required.

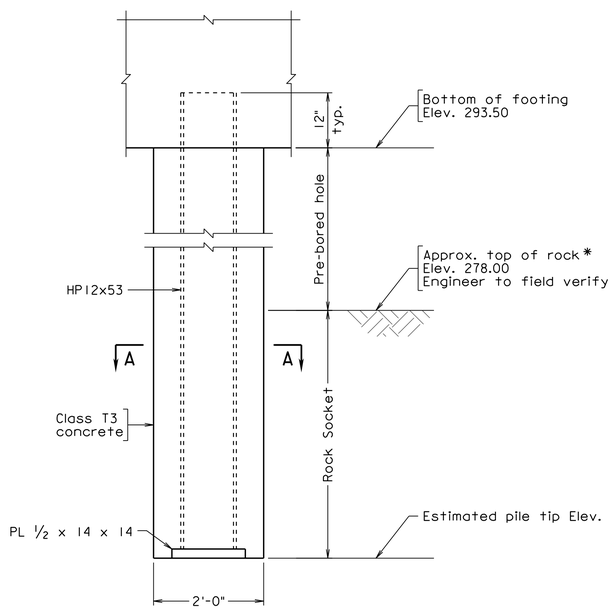

PRE-BORED PILE DETAIL

Not to scale

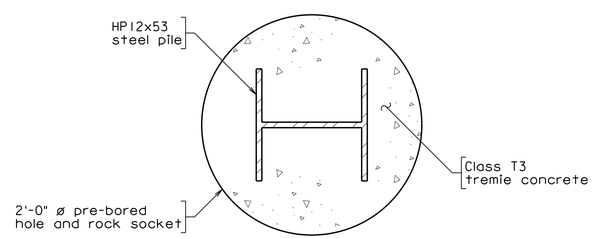

SECTION A-A

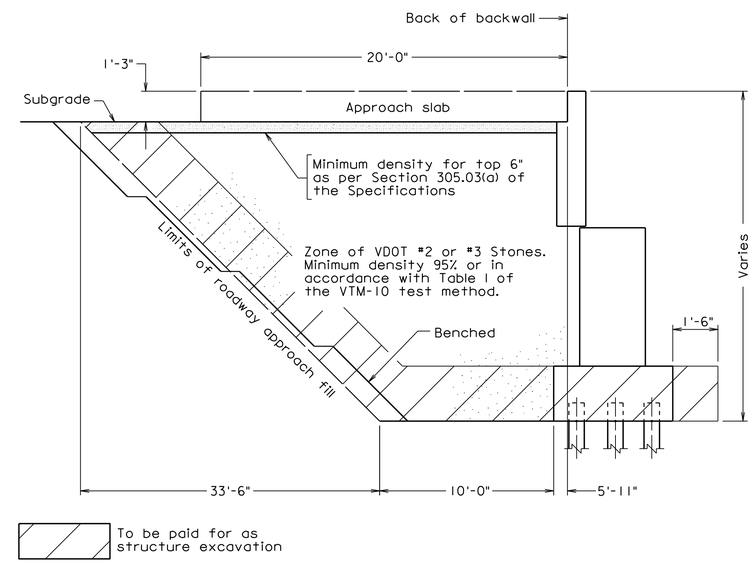

SECTION THROUGH ABUTMENT - FILL SECTION

Abutment drainage not shown

Not to scale

PILE DATA TABLE

Substructure Unit	Nominal Axial Resistance	Factored Axial Resistance	Estimated Rock Socket	Minimum Rock Socket	Estimated Tip Elevation	Minimum Tip Elevation
	Tons/pile	Tons/pile	ft-in	ft-in	ft	ft
Abutment A	238	125	3'-0"	2'-0"	275.00	275.00

The Strength Limit State controls the pile design.

*If top rock is encountered above the elevation specified in the Pre-Bored Pile Detail above contractor shall coordinate with EOR to ensure the pile design is still adequate.

PRELIMINARY PLANS

THESE PLANS NOT TO BE USED FOR CONSTRUCTION

Scale: 1 1/2" = 1'-0" unless otherwise noted

Dewberry

Dewberry Engineers Inc.
8401 ARLINGTON BLVD.
FAIRFAX, VA 22031
PHONE: 703.849.0100
FAX: 703.849.0518

HARTLAND DRIVE OVER BROAD RUN

LOUDOUN COUNTY

CPAP-2020-0009

SEAL

DEWBERRY ENGINEERS INC.
FAIRFAX, VA
STRUCTURAL ENGINEER

No.	DATE	BY	Description

REVISIONS

DESIGNED BY TPV

DRAWN BY TPV

CHECKED BY PCA

DATE APRIL 2020

TITLE

ABUTMENT A SECTIONS AND DETAILS - 2

PROJECT NO. 50113885

XXX-XX

SHEET NO. 8 of 49

Received by VMRC September 1, 2020 /blh

Notes:

For abutment details, see sheets 4 thru 8.

For footing reinforcement details, see sheet 6.

For weephole reinforcement detail, see sheet 8.

HR-1 rail shall be colored black.

All reinforcing bars in wingwall neatwork and footing shall be black steel.

E.F. denotes each face

N.F. denotes near face

F.F. denotes far face

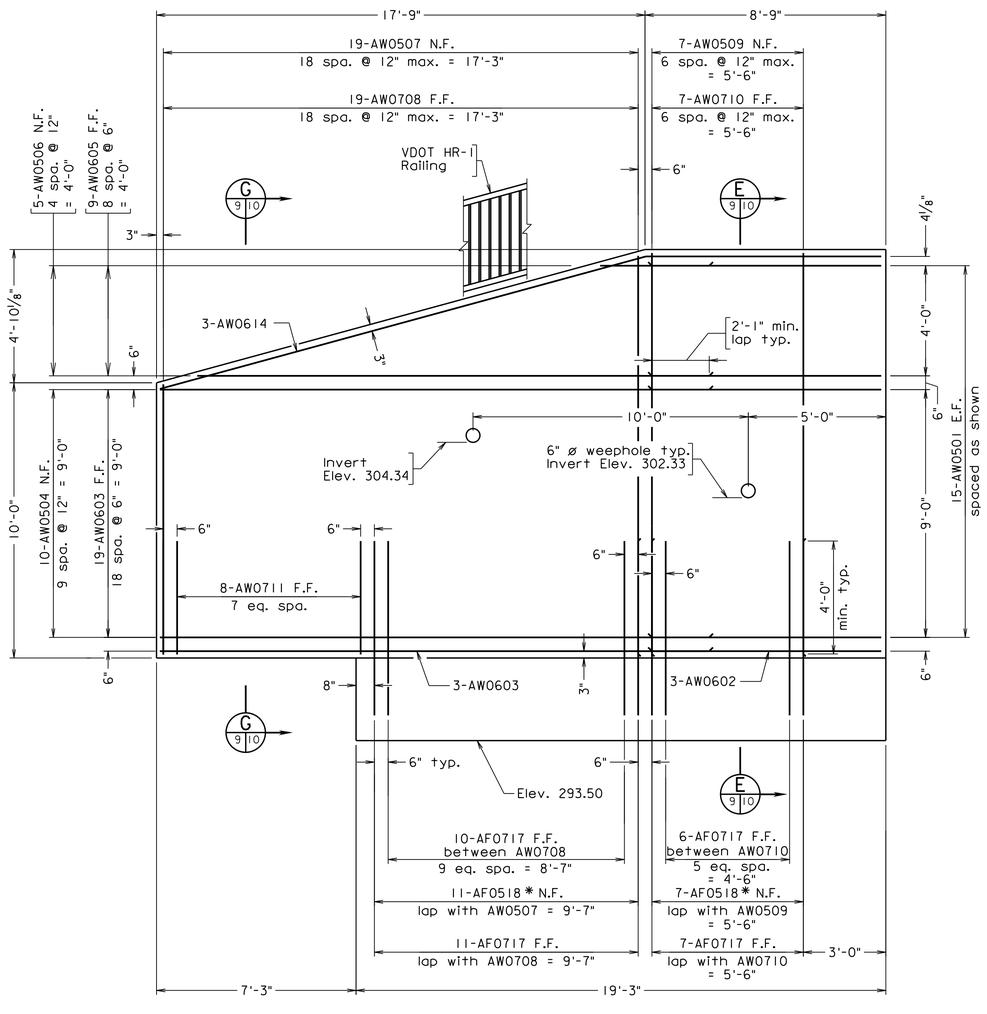

VIEW C (4|9)

Piles not shown

*Minimum Lap = 1'-9"

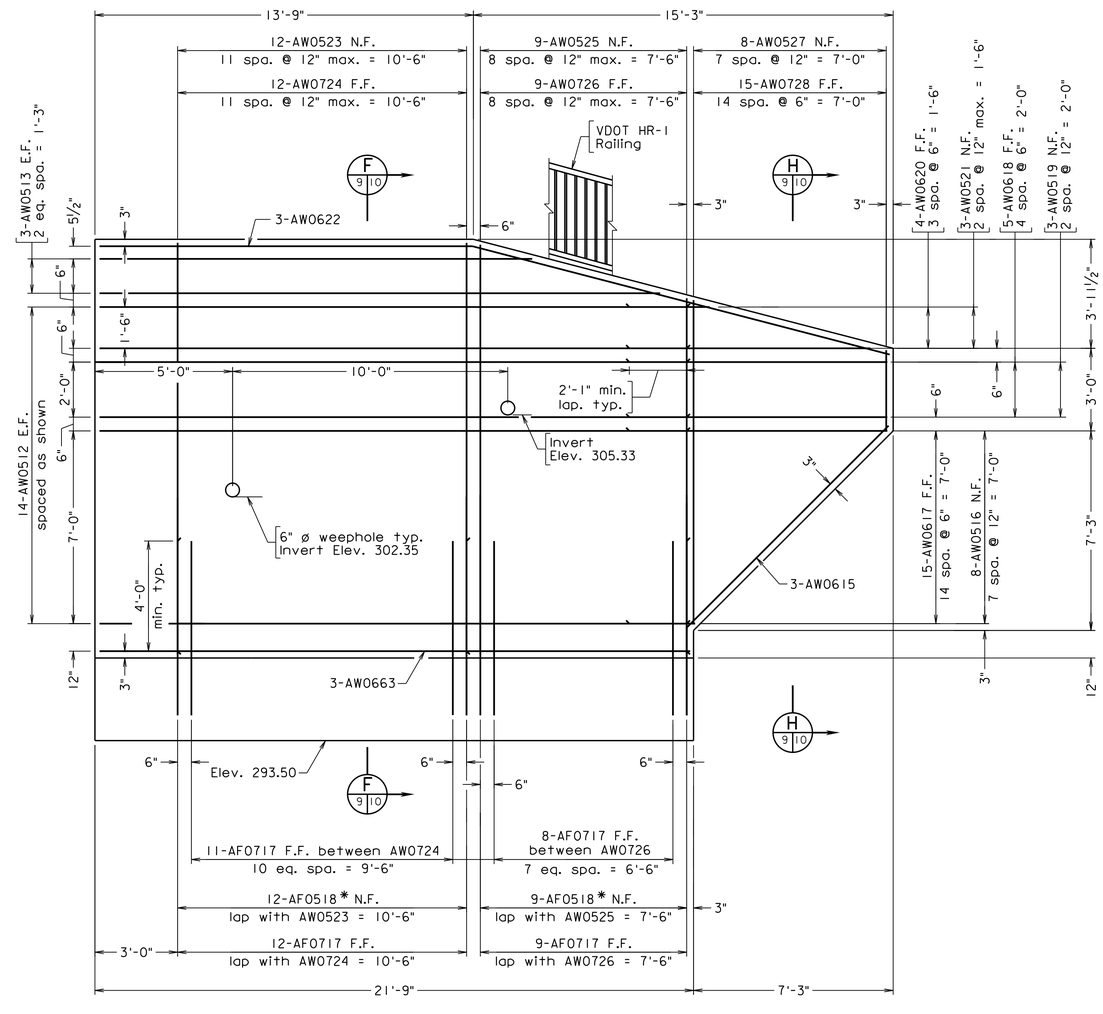

VIEW D (4|9)

Piles not shown

*Minimum Lap = 1'-9"

PRELIMINARY PLANS

THESE PLANS NOT TO BE USED FOR CONSTRUCTION

Scale: 3/8" = 1'-0"

Dewberry

Dewberry Engineers Inc.
8401 ARLINGTON BLVD.
FAIRFAX, VA 22031
PHONE: 703.849.0100
FAX: 703.849.0518

HARTLAND DRIVE OVER BROAD RUN

LOUDOUN COUNTY

CPAP-2020-0009

SEAL

DEWBERRY ENGINEERS INC.
FAIRFAX, VA
STRUCTURAL ENGINEER

No.	DATE	BY	Description

REVISIONS

DESIGNED BY	TPV
DRAWN BY	TPV
CHECKED BY	PCA
DATE	APRIL 2020

TITLE

ABUTMENT A WINGWALL ELEVATIONS

PROJECT NO. 50113885

XXX-XX

SHEET NO. 9 of 49

Received by VMRC September 1, 2020 /blh

Notes:

For abutment details, see sheets 4 thru 8.

For footing reinforcement details, see sheet 6.

All reinforcing bars in wingwall neatwork and footing shall be black steel.

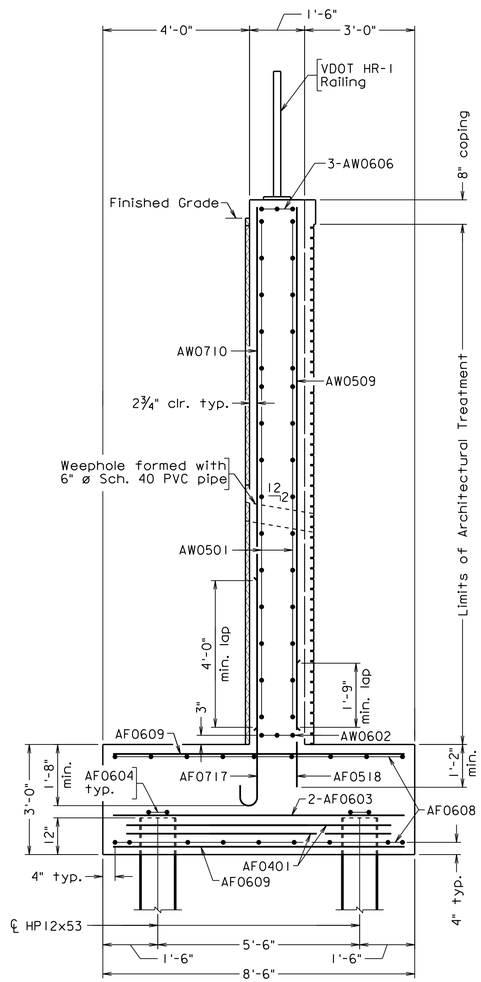

SECTION E 9|10

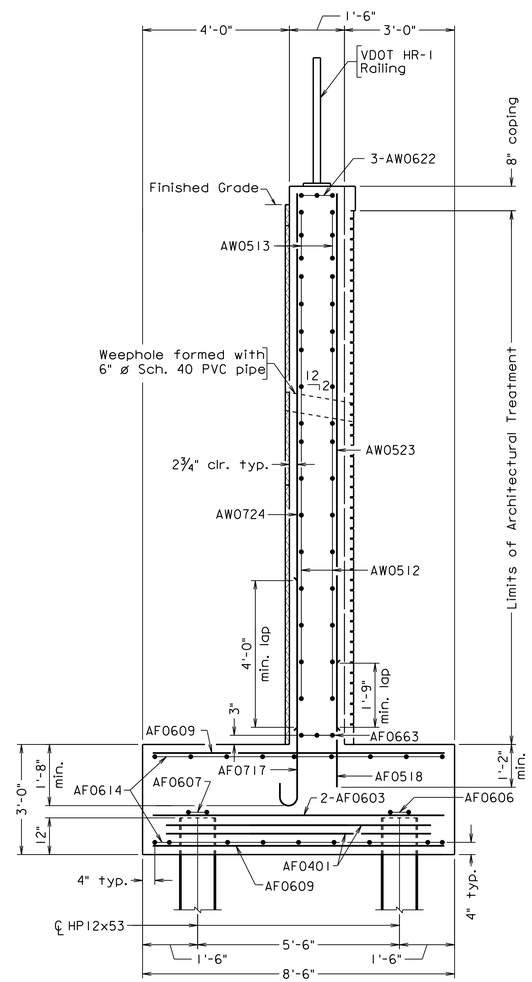

SECTION F 9|10

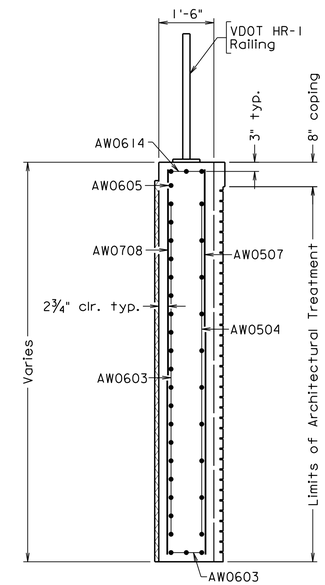

SECTION G 9|10

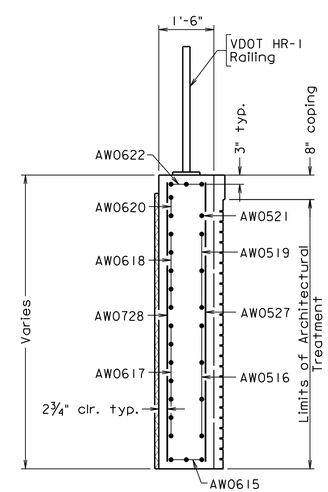

SECTION H 9|10

PRELIMINARY PLANS

THESE PLANS NOT TO BE USED FOR CONSTRUCTION

Scale: ½" = 1'-0"

Dewberry

Dewberry Engineers Inc.
8401 ARLINGTON BLVD.
FAIRFAX, VA 22031
PHONE: 703.849.0100
FAX: 703.849.0518

HARTLAND DRIVE OVER BROAD RUN

LOUDOUN COUNTY

CPAP-2020-0009

SEAL

DEWBERRY ENGINEERS INC.
FAIRFAX, VA
STRUCTURAL ENGINEER

No.	DATE	BY	Description

REVISIONS

DESIGNED BY	TPV
DRAWN BY	TPV
CHECKED BY	PCA
DATE	APRIL 2020

TITLE

ABUTMENT A WINGWALL SECTIONS

PROJECT NO. 50113885

XXX-XX

SHEET NO. 10 of 49

Received by VMRC September 1, 2020 /blh

Notes:

For integral backwall notes, see sheet 5.

For location of holes through end of beam and spacing of SH0603 bars, see sheet 28.

Geotextile fabric shall conform to the requirements of Section 245.03(c) of the Specifications. Cost shall be included in the price for elastic inclusion pay item.

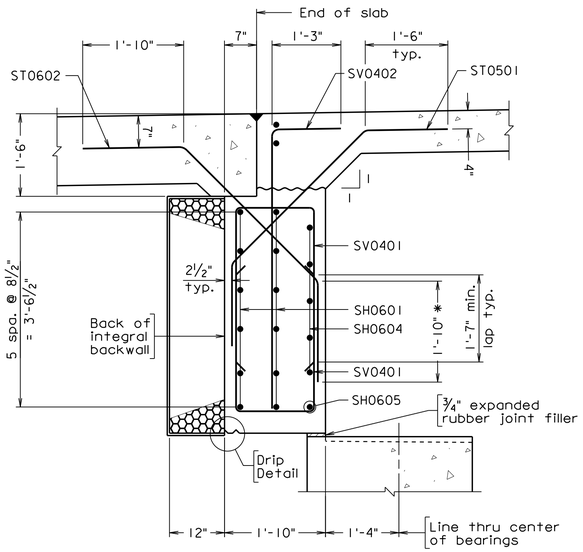

SECTION A (5/11)
Between beams

* Cut in the field as needed to clear bottom flange of prestressed concrete beam

For details not shown, see Section B

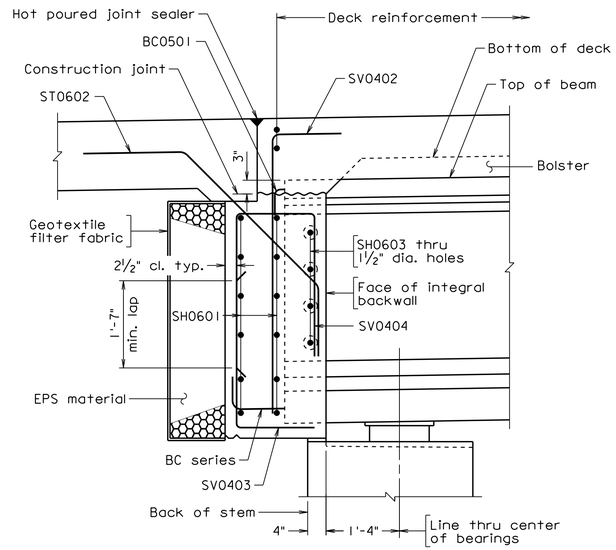

SECTION B (5/11)
At beams

For details not shown, see Section A

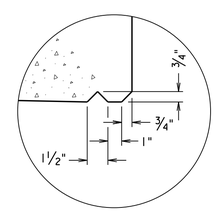

DRIP DETAIL
Not to scale

PRELIMINARY PLANS
THESE PLANS NOT TO BE USED FOR CONSTRUCTION

Scale: ¾" = 1'-0" unless otherwise noted

Dewberry

Dewberry Engineers Inc.
8401 ARLINGTON BLVD.
FAIRFAX, VA 22031
PHONE: 703.849.0100
FAX: 703.849.0518

HARTLAND DRIVE OVER BROAD RUN
LOUDOUN COUNTY
CPAP-2020-0009

SEAL

DEWBERRY ENGINEERS INC.
FAIRFAX, VA
STRUCTURAL ENGINEER

No.	DATE	BY	Description

REVISIONS

DESIGNED BY KLM
DRAWN BY KLM
CHECKED BY EJA
DATE APRIL 2020

TITLE
ABUTMENT A SEMI-INTEGRAL BACKWALL SECTIONS

PROJECT NO. 50113885

XXX-XX

SHEET NO. 11 of 49

Received by VMRC September 1, 2020 /blh

Notes:

For details of semi-integral backwall, see sheets 13 and 19.

For wingwall details, see sheets 17 and 18.

E.F. denotes each face

N.F. denotes near face

F.F. denotes far face

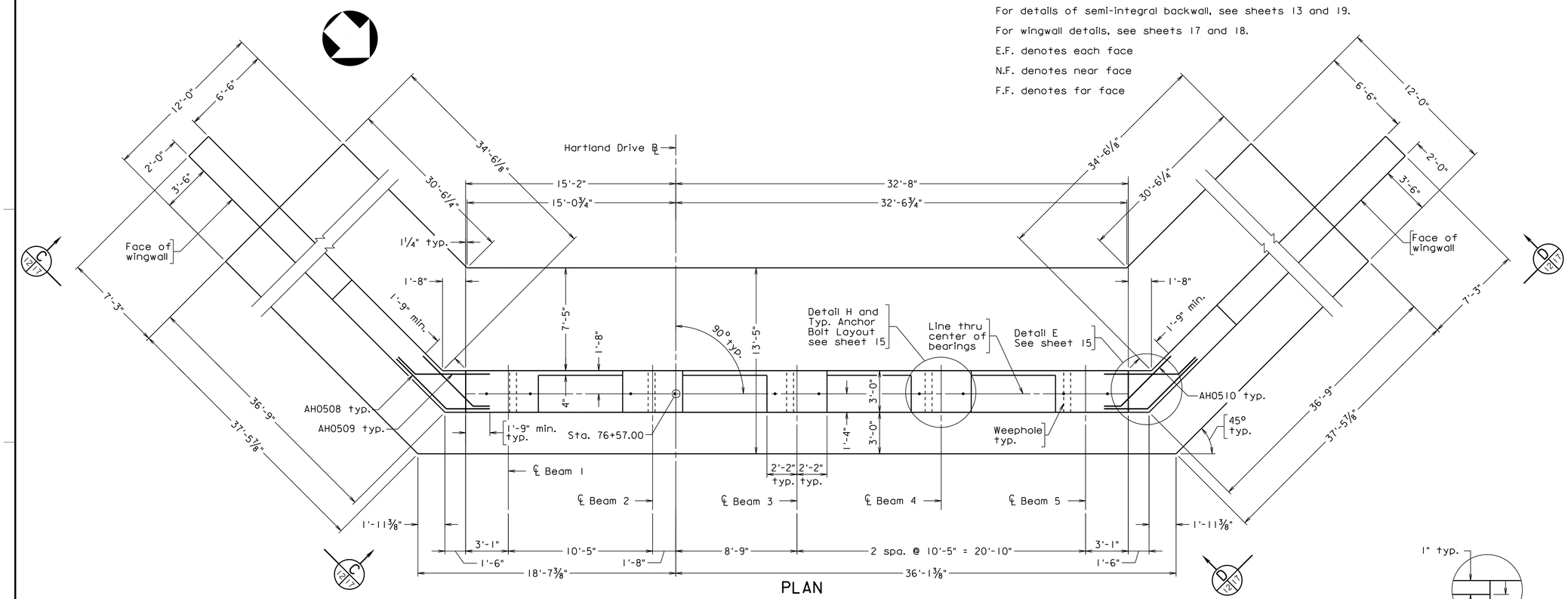

PLAN

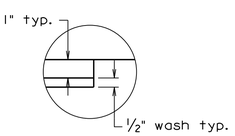

DETAIL I

Scale: 3" = 1'-0"

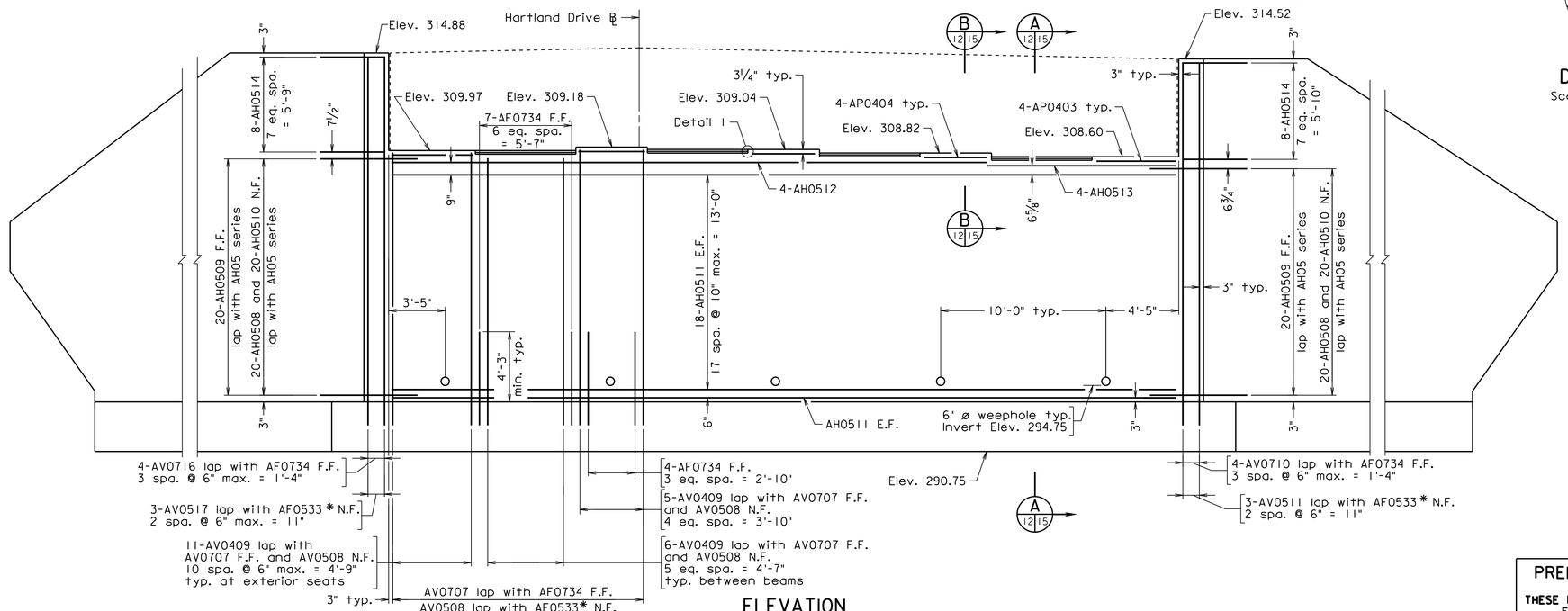

ELEVATION

Piles not shown

*Minimum Lap = 1'-9"

Scale: ¼" = 1'-0" unless otherwise noted

PRELIMINARY PLANS

THESE PLANS NOT TO BE USED FOR CONSTRUCTION

Dewberry

Dewberry Engineers Inc.
8401 ARLINGTON BLVD.
FAIRFAX, VA 22031
PHONE: 703.849.0100
FAX: 703.849.0518

HARTLAND DRIVE OVER BROAD RUN

LOUDOUN COUNTY

CPAP-2020-0009

SEAL

DEWBERRY ENGINEERS INC.
FAIRFAX, VA
STRUCTURAL ENGINEER

No.	DATE	BY	Description

REVISIONS

DESIGNED BY	TPV
DRAWN BY	TPV
CHECKED BY	PCA
DATE	APRIL 2020

TITLE

ABUTMENT B PLAN AND ELEVATION

PROJECT NO. 50113885

XXX-XX

SHEET NO. 12 of 49

Received by VMRC September 1, 2020 /blh

Notes:

Integral backwall concrete shall be placed and cured to a minimum compressive strength of 3000 psi prior to placement of deck concrete.

Backfill operations above seat level shall not be started until deck has been placed and cured to a minimum compressive strength of 3000 psi. Backfill shall be placed such that the differential in fill height between both abutments does not exceed 6" after compaction.

For details of holes through the web and location and number of BC series bars, see sheet 28.

The integral backwalls shall be cast when the least thermal movement of the superstructure can be expected during the period of initial set of the concrete in the backwall, e.g. at dusk or during an expected uniformly cloudy day.

Forms for the backwall shall be attached to the beams only; the forms shall not be attached to or blocked against the abutment stem. The backwall and forms must be free to move in relation to the abutment.

All reinforcement in the abutment backwall shall be Corrosion Resistant Reinforcing Steel, Class I.

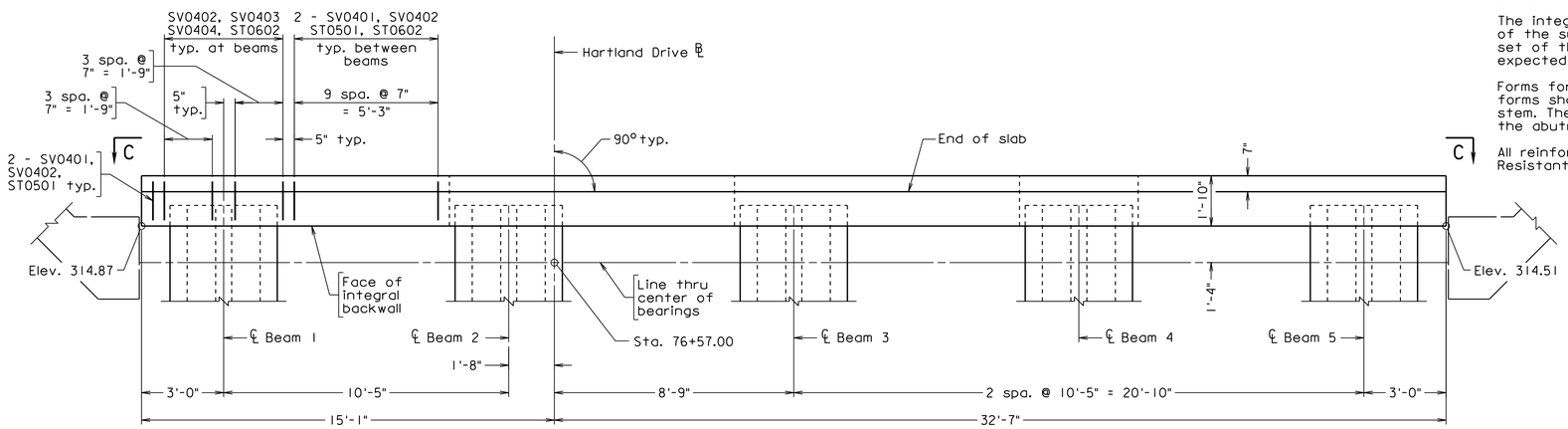

PLAN

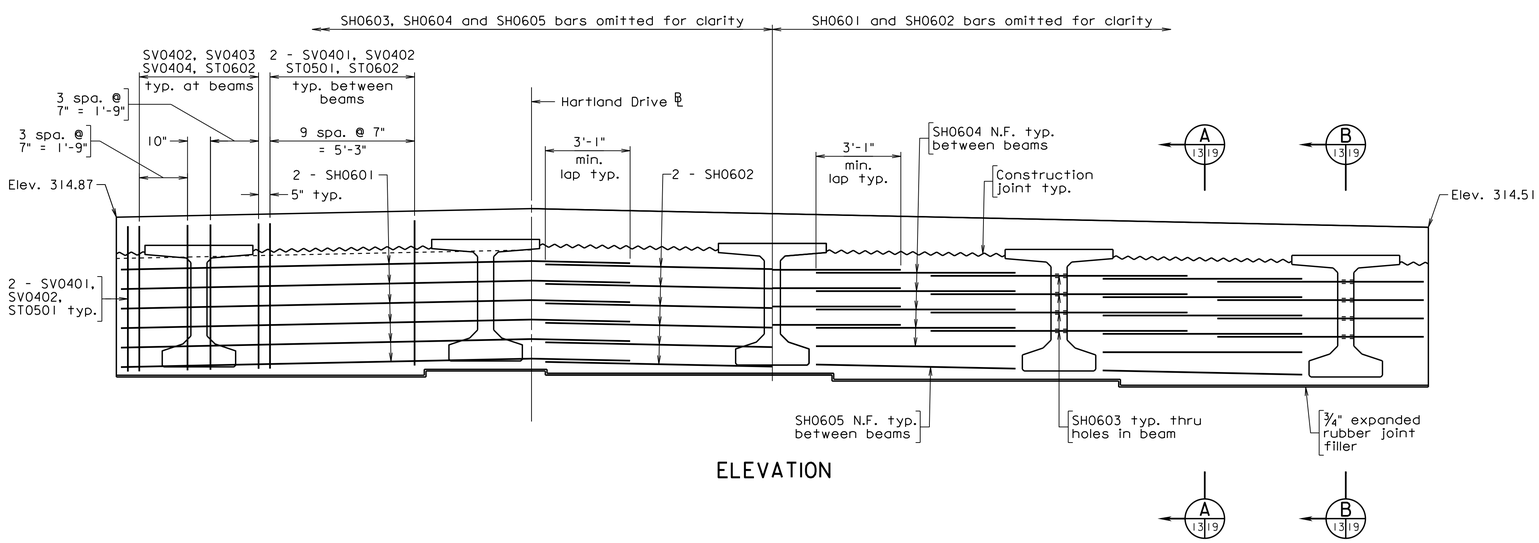

ELEVATION

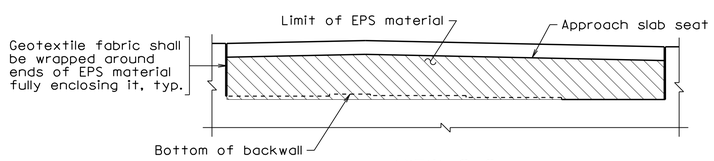

VIEW C-C
Not to scale

Scale: ⅜" = 1'-0"

PRELIMINARY PLANS

THESE PLANS NOT TO BE USED FOR CONSTRUCTION

Dewberry

Dewberry Engineers Inc.
8401 ARLINGTON BLVD.
FAIRFAX, VA 22031
PHONE: 703.849.0100
FAX: 703.849.0518

HARTLAND DRIVE OVER BROAD RUN
LOUDOUN COUNTY
CPAP-2020-0009

SEAL

DEWBERRY ENGINEERS INC.
FAIRFAX, VA
STRUCTURAL ENGINEER

No.	DATE	BY	Description

REVISIONS

DESIGNED BY KLM
DRAWN BY JPD
CHECKED BY EJA
DATE APRIL 2020

TITLE
ABUTMENT B SEMI-INTEGRAL BACKWALL PLAN AND ELEVATION

PROJECT NO. 50113885

XXX-XX

SHEET NO. 13 of 49

013

Received by VMRC September 1, 2020 /blh

Notes:

All reinforcing bars in abutment footings shall be black steel.

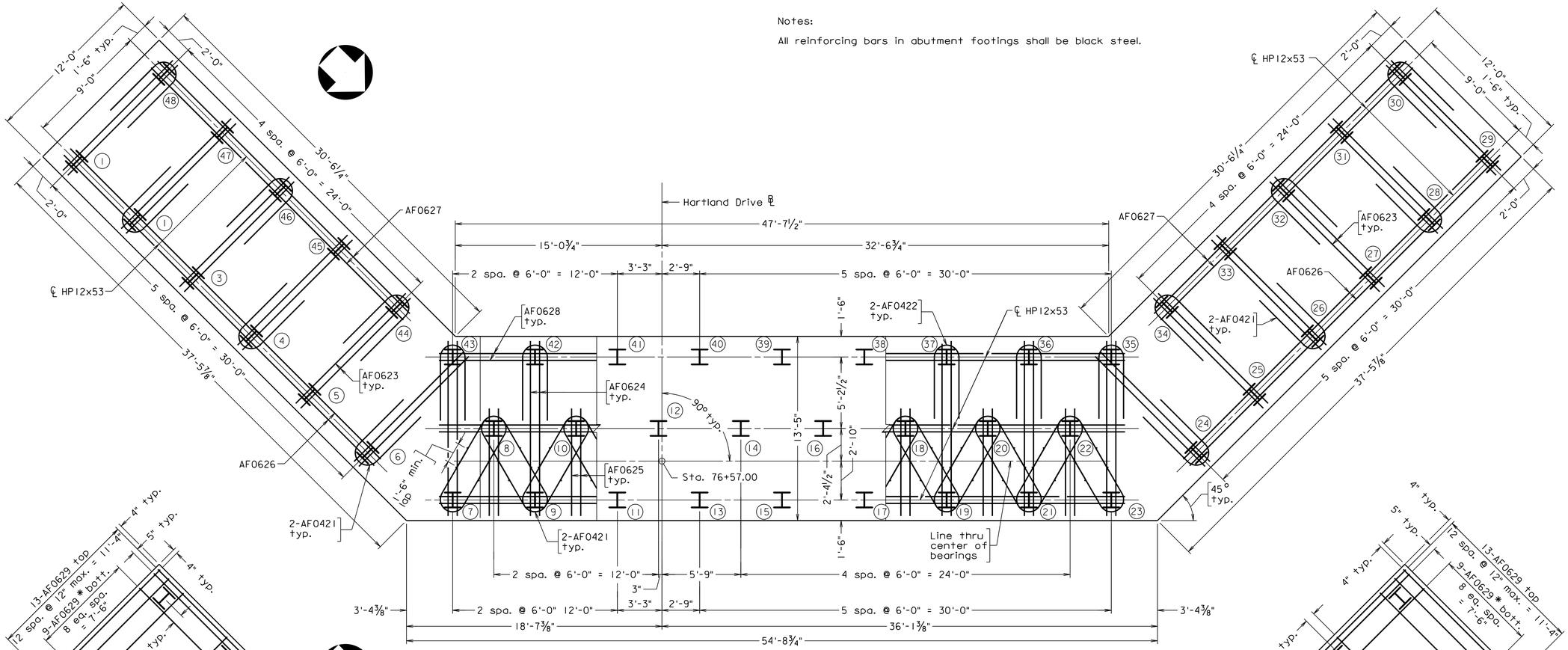

PILE LAYOUT AND PILE REINFORCEMENT PLAN

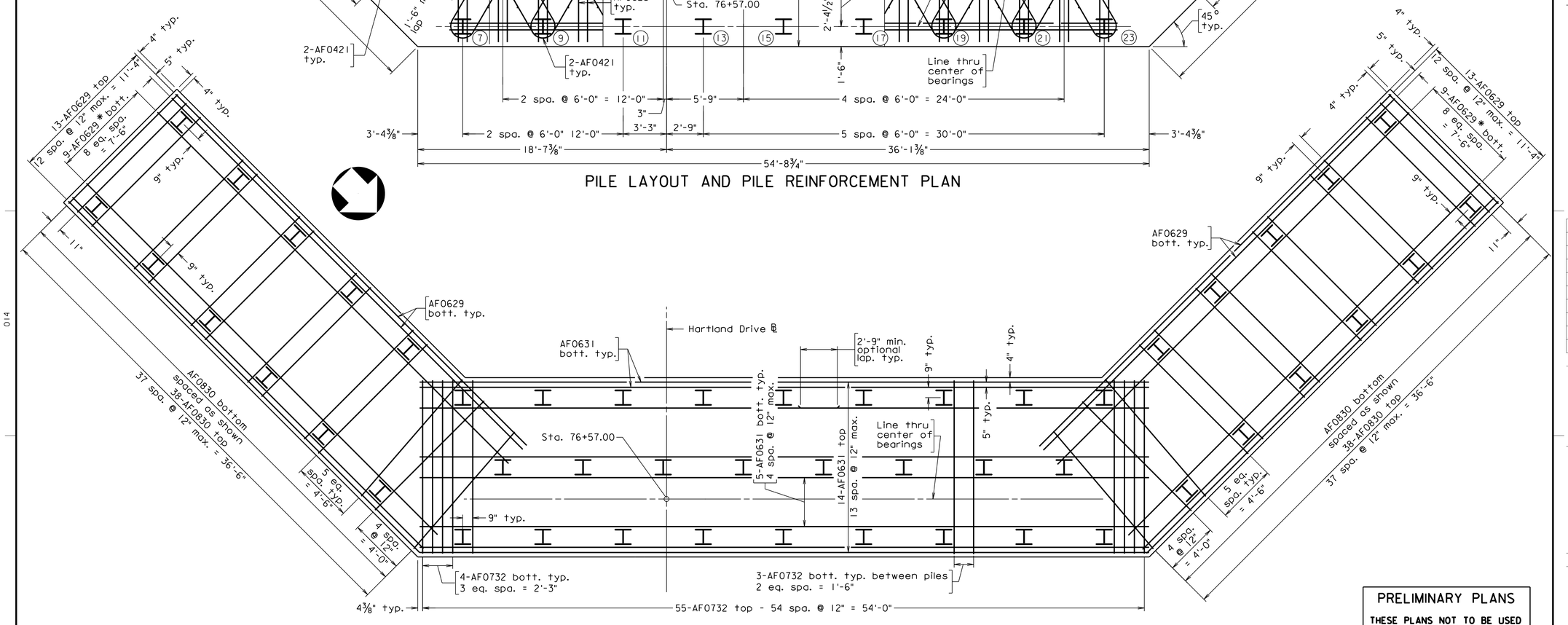

FOOTING REINFORCEMENT PLAN

* Cut in field as necessary.

Scale: ¼" = 1'-0"

PRELIMINARY PLANS

THESE PLANS NOT TO BE USED FOR CONSTRUCTION

Dewberry

Dewberry Engineers Inc.
8401 ARLINGTON BLVD.
FAIRFAX, VA 22031
PHONE: 703.849.0100
FAX: 703.849.0518

HARTLAND DRIVE OVER BROAD RUN

LOUDOUN COUNTY

CPAP-2020-0009

SEAL

DEWBERRY ENGINEERS INC.
FAIRFAX, VA
STRUCTURAL ENGINEER

No.	DATE	BY	Description

REVISIONS

DESIGNED BY	TPV
DRAWN BY	TPV
CHECKED BY	PCA
DATE	APRIL 2020

TITLE

ABUTMENT B FOOTING PLAN

PROJECT NO. 50113885

XXX-XX

SHEET NO. 14 of 49

Received by VMRC September 1, 2020 /blh

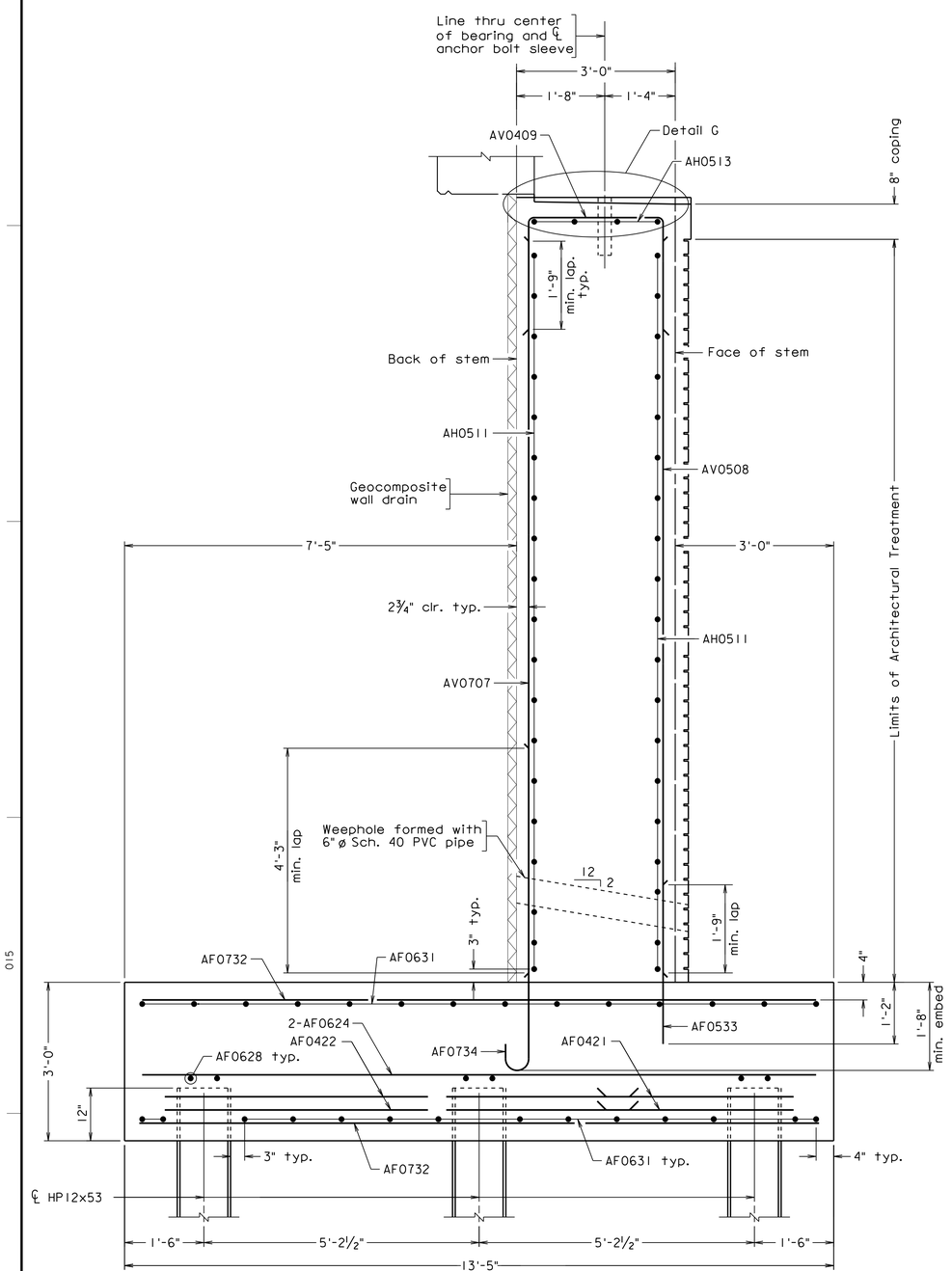

SECTION (A / 12 | 15)

Pre-bored holes for piles not shown.
See sheet 16 for details

Scale: ¾" = 1'-0" unless otherwise noted

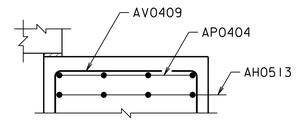

SECTION (B / 12 | 15)

Scale: 1½" = 1'-0"

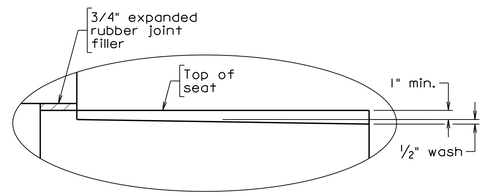

DETAIL G

Scale: 1½" = 1'-0"

Notes:

For details of semi-integral backwall, see sheets 13 and 19.

All reinforcing bars in the abutment footing and neatwork shall be black steel.

For anchor bolt sleeve details, see bearing details on sheet 22.

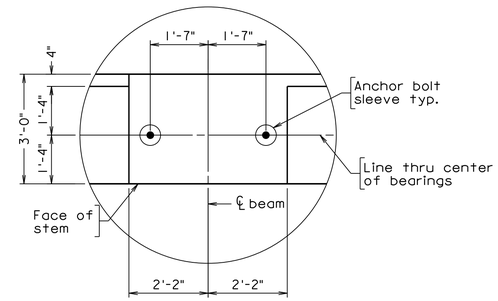

DETAIL H AND TYP. ANCHOR BOLT LAYOUT

Scale: ½" = 1'-0"

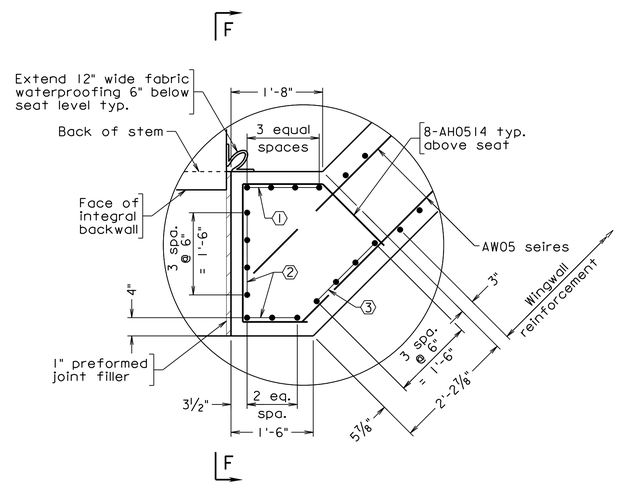

DETAIL E

① AV0710 @ West Wingwall
AV0716 @ East Wingwall

② AV0511 @ West Wingwall
AV0517 @ East Wingwall

③ AV0512 @ West Wingwall
AV0518 @ East Wingwall

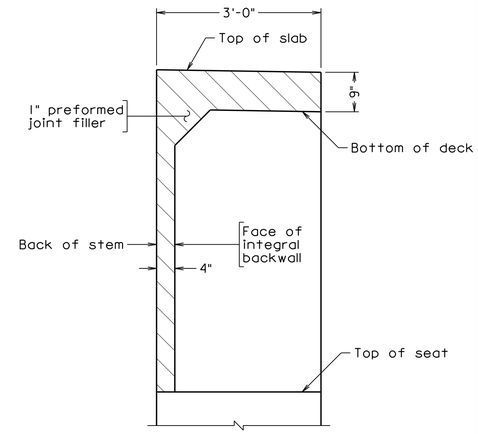

SECTION F-F

PRELIMINARY PLANS

THESE PLANS NOT TO BE USED FOR CONSTRUCTION

Dewberry

Dewberry Engineers Inc.
8401 ARLINGTON BLVD.
FAIRFAX, VA 22031
PHONE: 703.849.0100
FAX: 703.849.0518

HARTLAND DRIVE OVER BROAD RUN
LOUDOUN COUNTY
CPAP-2020-0009

SEAL

DEWBERRY ENGINEERS INC.
FAIRFAX, VA
STRUCTURAL ENGINEER

No.	DATE	BY	Description

REVISIONS

DESIGNED BY	TPV
DRAWN BY	TPV
CHECKED BY	PCA
DATE	APRIL 2020

TITLE

ABUTMENT B SECTIONS AND DETAILS - 1

PROJECT NO. 50113885

XXX-XX

SHEET NO. 15 of 49

Received by VMRC September 1, 2020 /blh

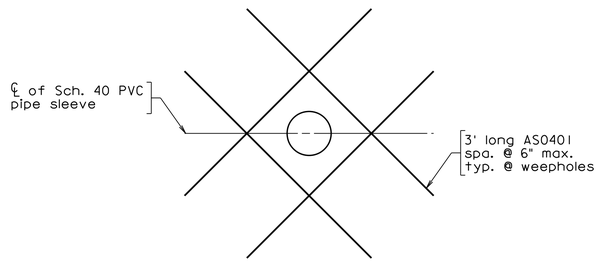

TYPICAL REINFORCEMENT AT WEEPHOLE

Not to scale

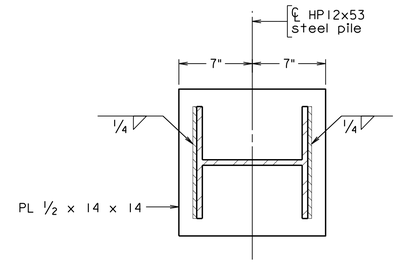

BASE PLATE DETAIL

Notes:

All reinforcing bars in the abutment footing and neatwork shall be black steel.

Material in the abutment select backfill zone shall be VDOT #2 or #3 stone and shall be compacted in accordance with Sections 303 and 305 of the VDOT Road and Bridge Specifications.

The final 1'-3" depth of the embankment side slopes shall be regular embankment material placed and finished as required.

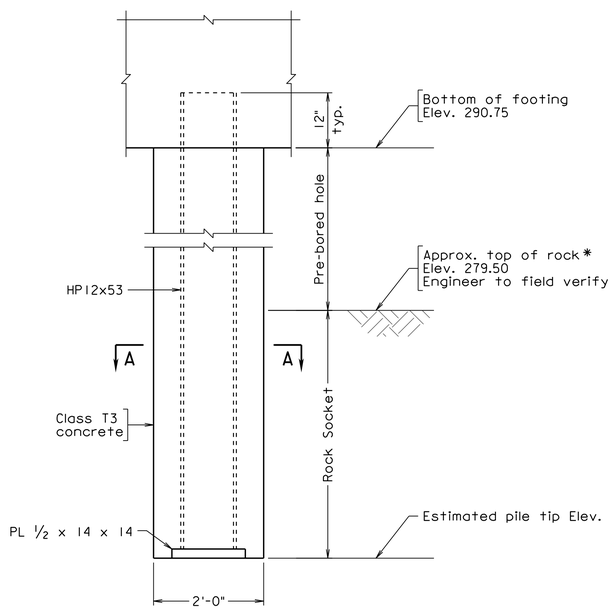

PRE-BORED PILE DETAIL

Not to scale

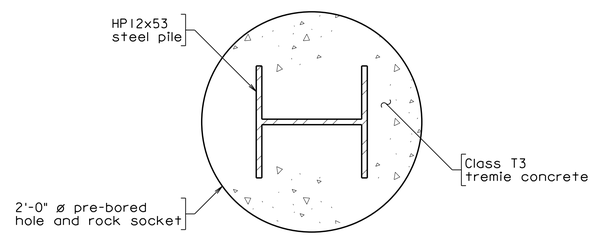

SECTION A-A

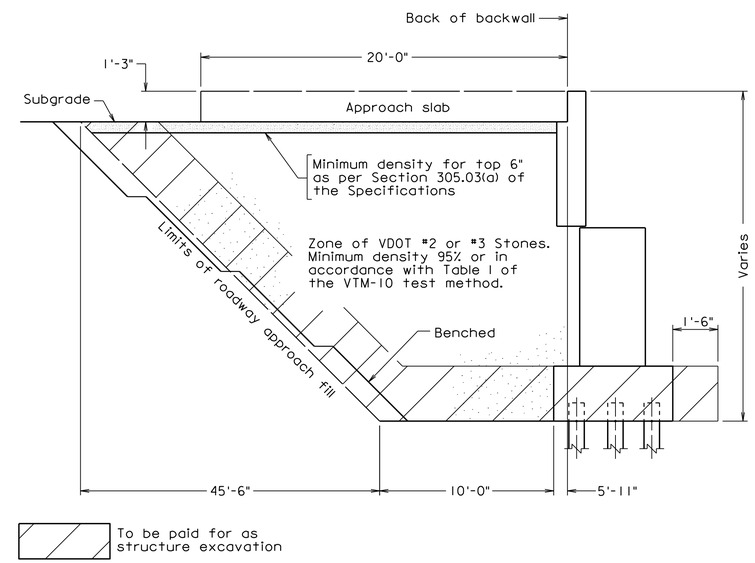

SECTION THROUGH ABUTMENT - FILL SECTION

Abutment drainage not shown

Not to scale

PILE DATA TABLE

Substructure Unit	Nominal Axial Resistance	Factored Axial Resistance	Estimated Rock Socket	Minimum Rock Socket	Estimated Tip Elevation	Minimum Tip Elevation
	Tons/pile	Tons/pile	ft-in	ft-in	ft	ft
Abutment B	254	133	3'-9"	2'-6"	275.75	275.75

The Strength Limit State controls the pile design.

*If top rock is encountered above the elevation specified in the Pre-Bored Pile Detail above contractor shall coordinate with EOR to ensure the pile design is still adequate.

PRELIMINARY PLANS

THESE PLANS NOT TO BE USED FOR CONSTRUCTION

Scale: 1½" = 1'-0" unless otherwise noted

Dewberry

Dewberry Engineers Inc.
8401 ARLINGTON BLVD.
FAIRFAX, VA 22031
PHONE: 703.849.0100
FAX: 703.849.0518

HARTLAND DRIVE OVER BROAD RUN

LOUDOUN COUNTY

CPAP-2020-0009

SEAL

DEWBERRY ENGINEERS INC.
FAIRFAX, VA
STRUCTURAL ENGINEER

No.	DATE	BY	Description

REVISIONS

DESIGNED BY TPV

DRAWN BY TPV

CHECKED BY PCA

DATE APRIL 2020

TITLE

ABUTMENT B SECTIONS AND DETAILS - 2

PROJECT NO. 50113885

XXX-XX

SHEET NO. 16 of 49

Received by VMRC September 1, 2020 /blh

Notes:

For abutment details, see sheets 12 thru 16.

For footing reinforcement details, see sheet 14.

For weephole reinforcement detail, see sheet 16.

HR-1 rail shall be colored black.

All reinforcing bars in wingwall neatwork and footing shall be black steel.

E.F. denotes each face

N.F. denotes near face

F.F. denotes far face

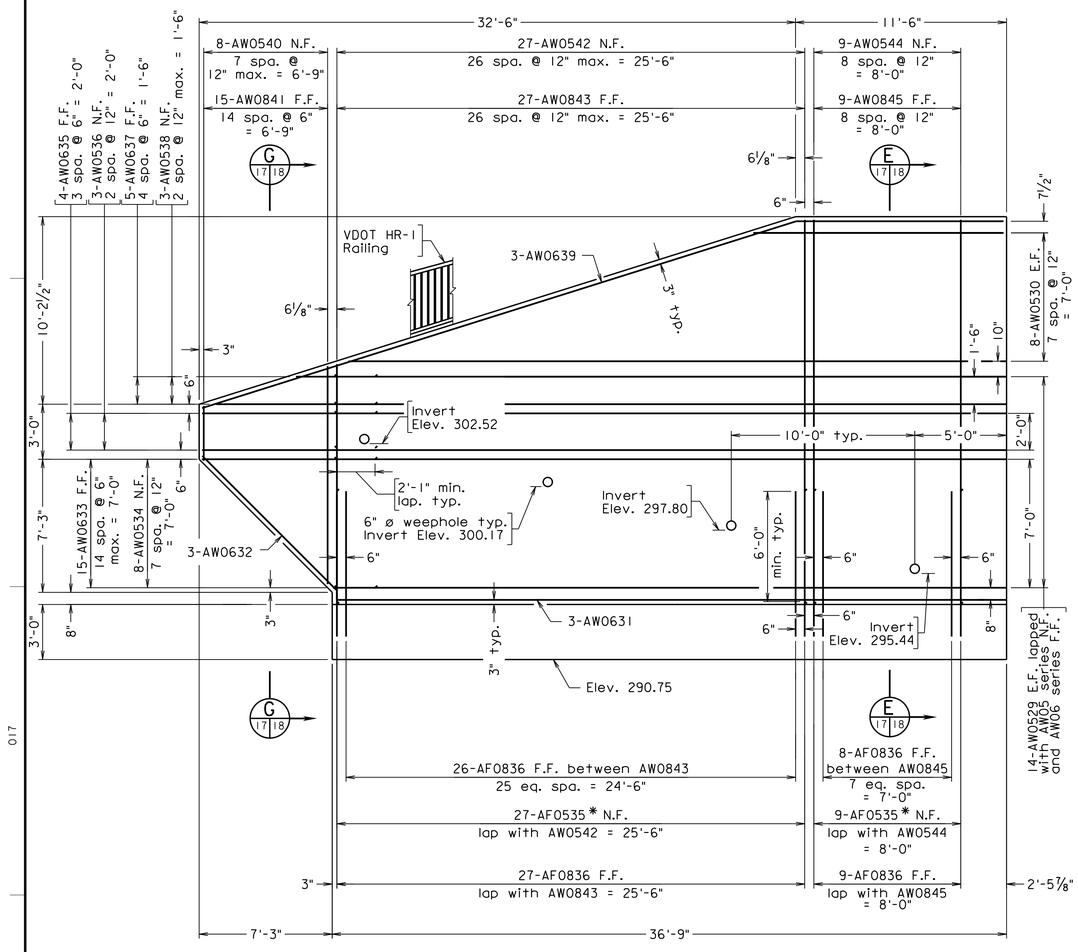

VIEW C (12|17)

Piles not shown

*Minimum Lap = 1'-9"

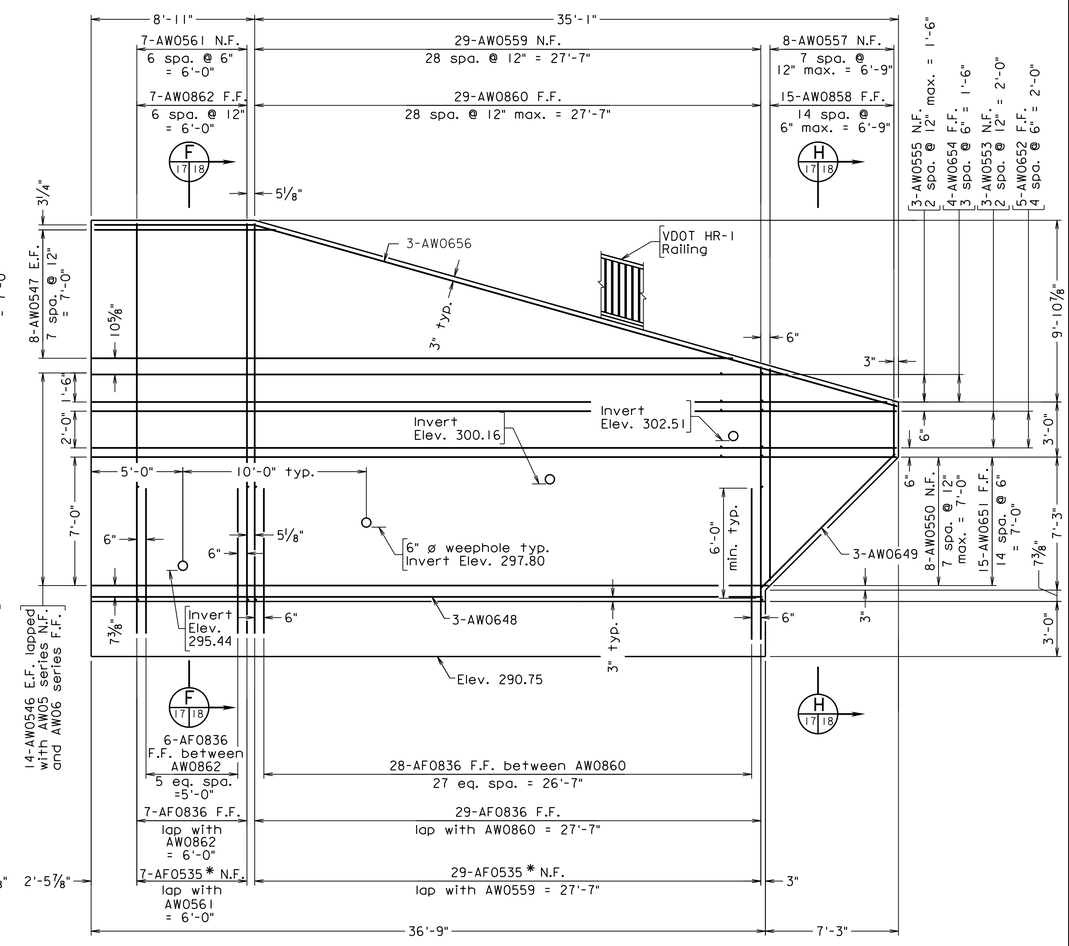

VIEW D (12|17)

Piles not shown

*Minimum Lap = 1'-9"

PRELIMINARY PLANS

THESE PLANS NOT TO BE USED FOR CONSTRUCTION

Scale: 1/4" = 1'-0"

Dewberry

Dewberry Engineers Inc.
8401 ARLINGTON BLVD.
FAIRFAX, VA 22031
PHONE: 703.849.0100
FAX: 703.849.0518

HARTLAND DRIVE OVER BROAD RUN

LOUDOUN COUNTY

CPAP-2020-0009

SEAL

DEWBERRY ENGINEERS INC.
FAIRFAX, VA
STRUCTURAL ENGINEER

No.	DATE	BY	Description

REVISIONS

DESIGNED BY	TPV
DRAWN BY	TPV
CHECKED BY	PCA
DATE	APRIL 2020

TITLE

ABUTMENT B WINGWALL ELEVATIONS

PROJECT NO. 50113885

XXX-XX

SHEET NO. 17 of 49

Received by VMRC September 1, 2020 /blh

Notes:

For abutment details, see sheets 12 thru 16.

For footing reinforcement details, see sheet 14.

All reinforcing bars in wingwall neatwork and footing shall be black steel.

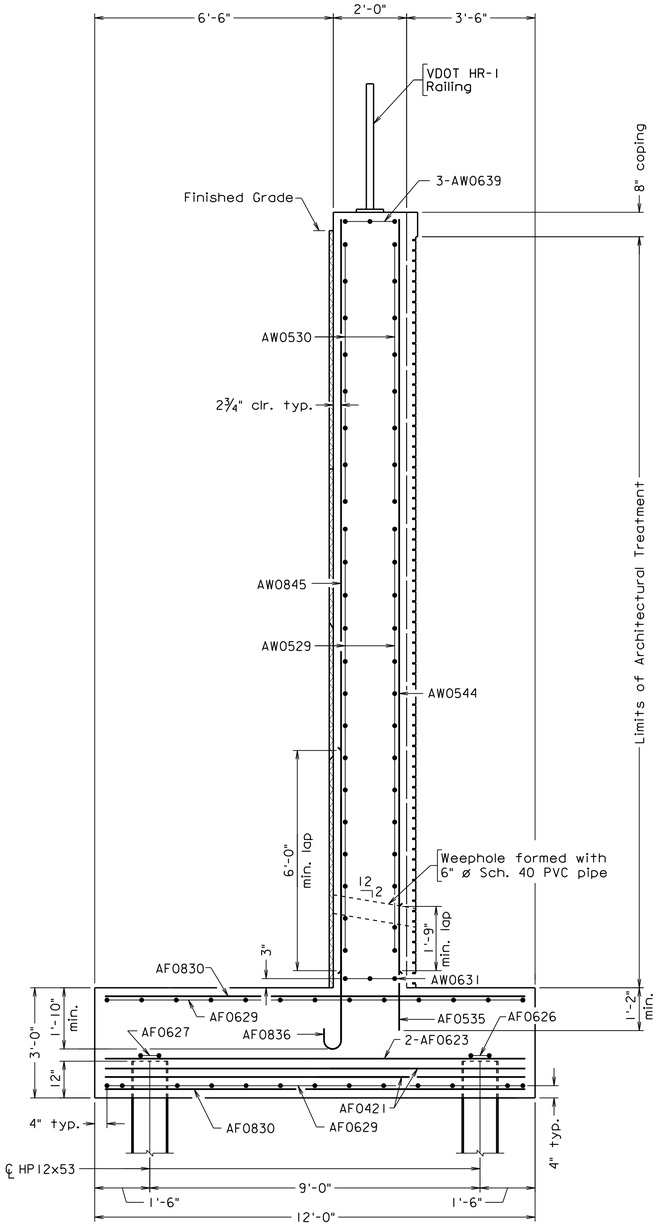

SECTION E 17 18

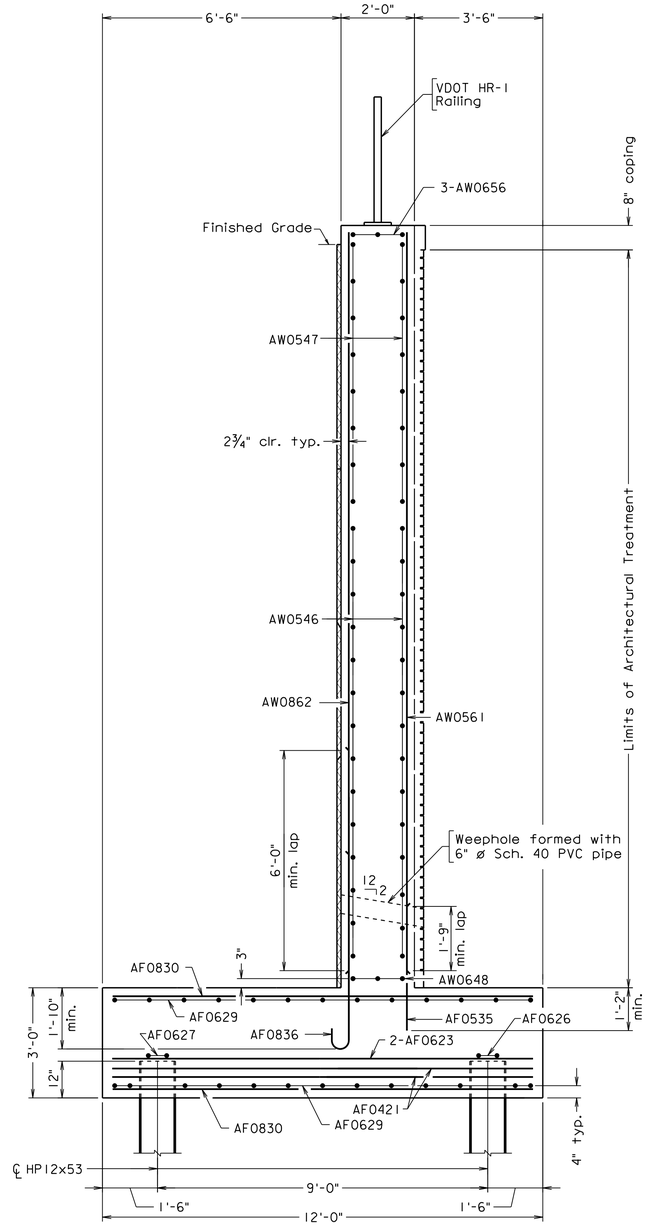

SECTION F 17 18

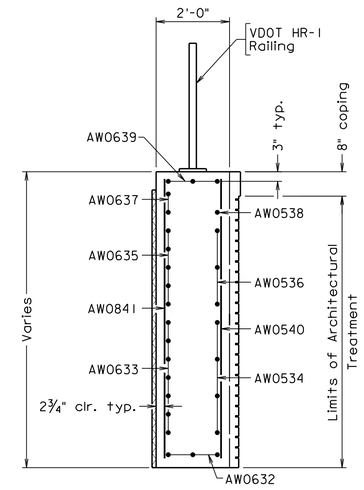

SECTION G 17 18

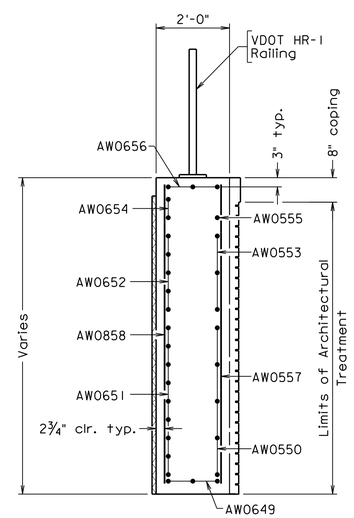

SECTION H 17 18

Scale: ½" = 1'-0"

PRELIMINARY PLANS

THESE PLANS NOT TO BE USED FOR CONSTRUCTION

Dewberry

Dewberry Engineers Inc.
8401 ARLINGTON BLVD.
FAIRFAX, VA 22031
PHONE: 703.849.0100
FAX: 703.849.0518

HARTLAND DRIVE OVER BROAD RUN

LOUDOUN COUNTY

CPAP-2020-0009

SEAL

DEWBERRY ENGINEERS INC.
FAIRFAX, VA
STRUCTURAL ENGINEER

No.	DATE	BY	Description

REVISIONS

DESIGNED BY TPV

DRAWN BY TPV

CHECKED BY PCA

DATE APRIL 2020

TITLE

ABUTMENT B WINGWALL SECTIONS

PROJECT NO. 50113885

XXX-XX

Received by VMRC September 1, 2020 /blh

Notes:

For integral backwall notes, see sheet 13.

For location of holes through end of beam and spacing of SH0603 bars, see sheet 28.

Geotextile fabric shall conform to the requirements of Section 245.03(c) of the Specifications. Cost shall be included in the price for elastic inclusion pay item.

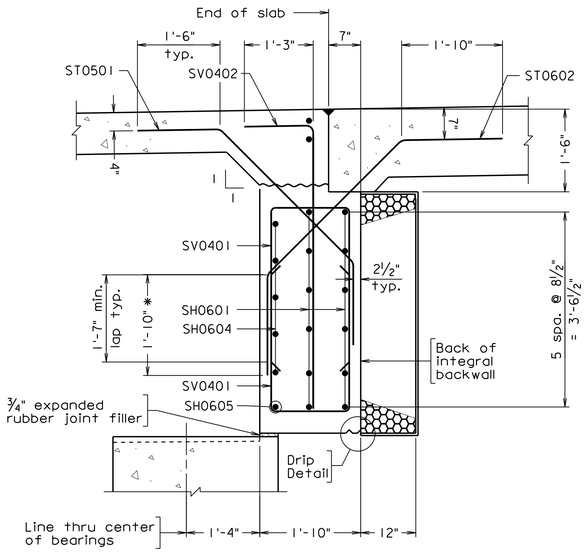

SECTION A (13|19)
Between beams

* Cut in the field as needed to clear bottom flange of prestressed concrete beam

For details not shown, see Section B

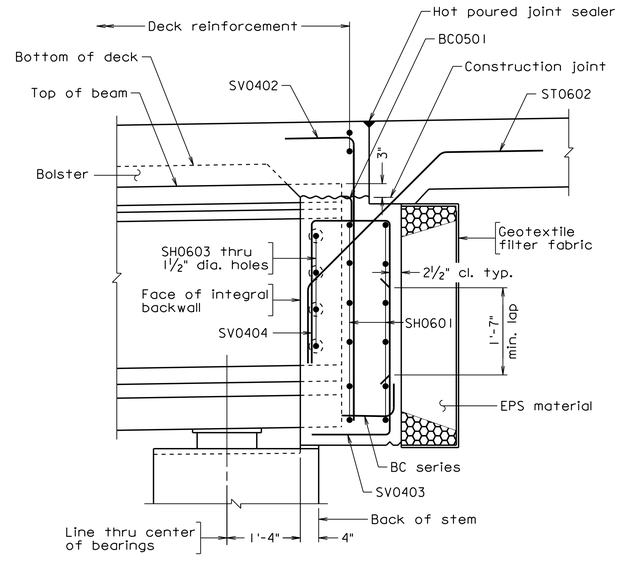

SECTION B (13|19)
At beams

For details not shown, see Section A

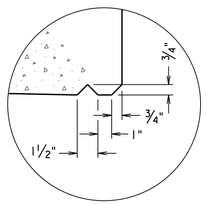

DRIP DETAIL
Not to scale

PRELIMINARY PLANS
THESE PLANS NOT TO BE USED FOR CONSTRUCTION

Scale: ¾" = 1'-0" unless otherwise noted

Dewberry

Dewberry Engineers Inc.
8401 ARLINGTON BLVD.
FAIRFAX, VA 22031
PHONE: 703.849.0100
FAX: 703.849.0518

HARTLAND DRIVE OVER BROAD RUN
LOUDOUN COUNTY
CPAP-2020-0009

SEAL

DEWBERRY ENGINEERS INC.
FAIRFAX, VA
STRUCTURAL ENGINEER

No.	DATE	BY	Description

REVISIONS

DESIGNED BY KLM
DRAWN BY JPD
CHECKED BY EJA
DATE APRIL 2020

TITLE
ABUTMENT B SEMI-INTEGRAL BACKWALL SECTIONS

PROJECT NO. 50113885

XXX-XX

SHEET NO. 19 of 49

Received by VMRC September 1, 2020 /blh

Notes:

When finishing concrete between and beyond pads, float surface to drain from ℄ pier to edges of cap.

Welded wire fabric may be substituted for spiral reinforcement in pier columns, maintaining an equivalent area of reinforcement, subject to approval by Bridge Engineer.

For closure diaphragm details, see sheet 30.

All reinforcement in the pier shall be black steel.

For column section, footing plan, dowel details and pile details, see sheet 21.

Provide 1.5 extra turns of spiral bar at each end of PB03 spiral unit. Extend spiral bar 2" above bottom of cap.

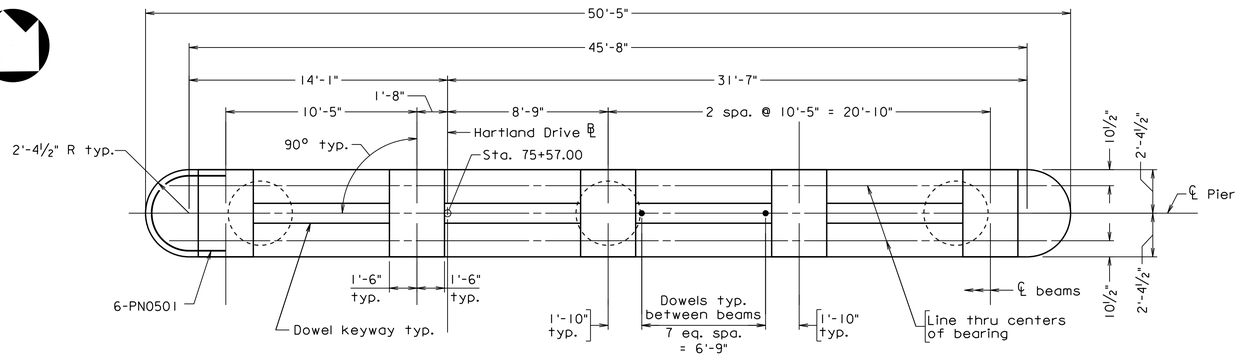

PLAN OF CAP

SEAT PAD ELEVATIONS					
	Elev. 1	Elev. 2	Elev. 3	Elev. 4	Elev. 5
Span a	307.36	307.58	307.43	307.21	307.00
Span b	307.41	307.62	307.48	307.26	307.04

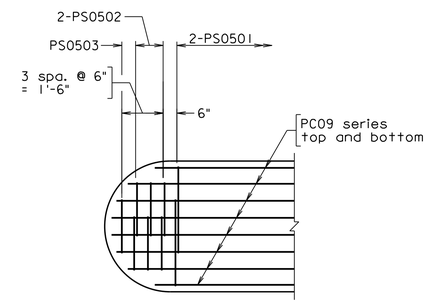

ROUNDED CAP END PLACEMENT DETAIL

Not to scale

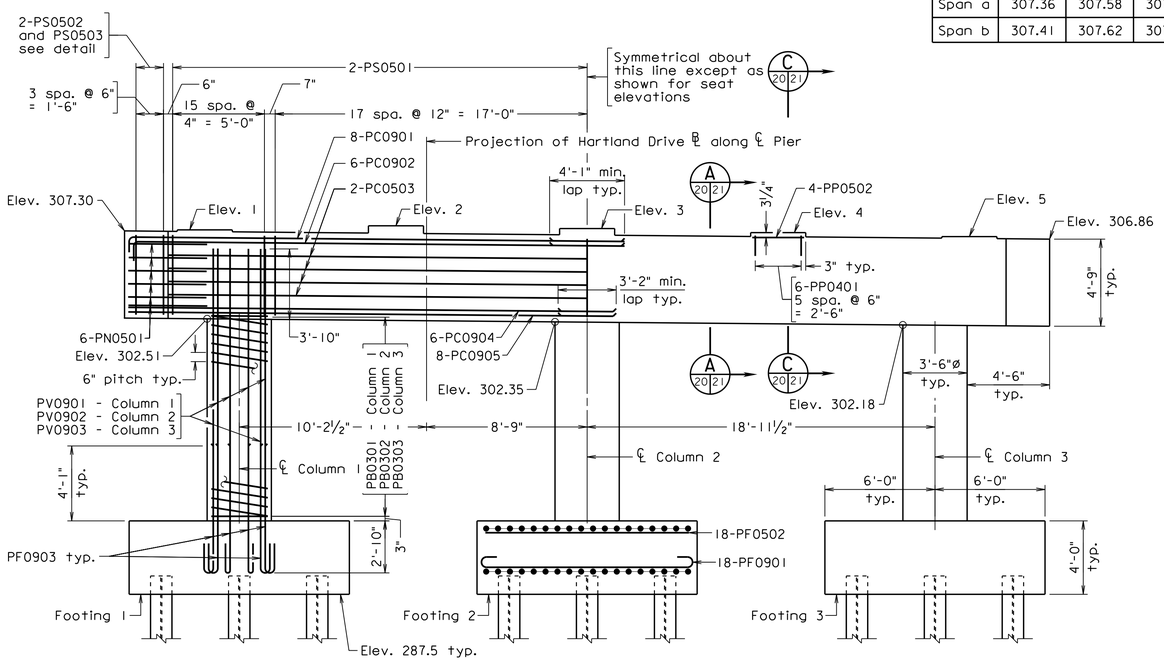

ELEVATION

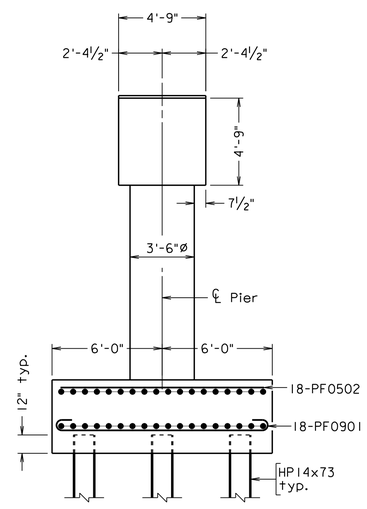

END VIEW

PRELIMINARY PLANS

THESE PLANS NOT TO BE USED FOR CONSTRUCTION

Scale: ¼" = 1'-0" unless otherwise noted

020

Dewberry

Dewberry Engineers Inc.
8401 ARLINGTON BLVD.
FAIRFAX, VA 22031
PHONE: 703.849.0100
FAX: 703.849.0518

HARTLAND DRIVE OVER BROAD RUN

LOUDOUN COUNTY

CPAP-2020-0009

SEAL

DEWBERRY ENGINEERS INC.
FAIRFAX, VA
STRUCTURAL ENGINEER

No.	DATE	BY	Description

REVISIONS

DESIGNED BY EJA

DRAWN BY JPD

CHECKED BY GJM

DATE APRIL 2020

TITLE

PIER PLAN AND ELEVATION

PROJECT NO. 50113885

XXX-XX

Received by VMRC September 1, 2020 /blh

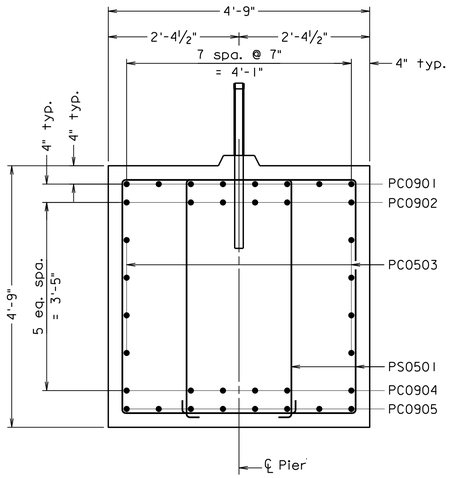

SECTION A (20|21)

Scale: ¾" = 1'-0"

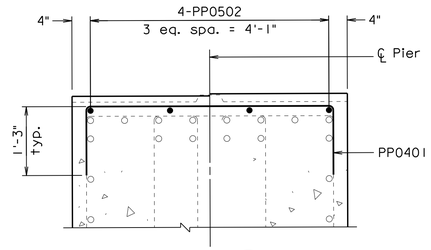

SECTION C (20|21)

Scale: ¾" = 1'-0"

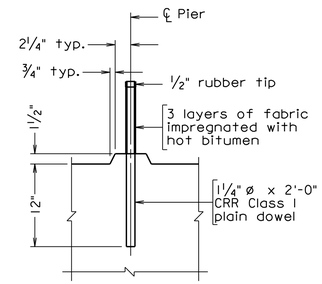

DOWEL DETAIL

Scale: ½" = 1'-0"

Notes:

For pier notes, see sheet 20.

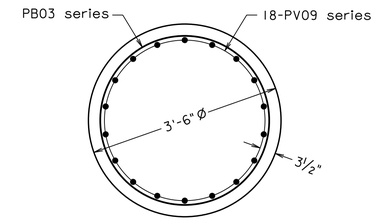

TYPICAL SECTION OF COLUMN

Scale: ¾" = 1'-0"

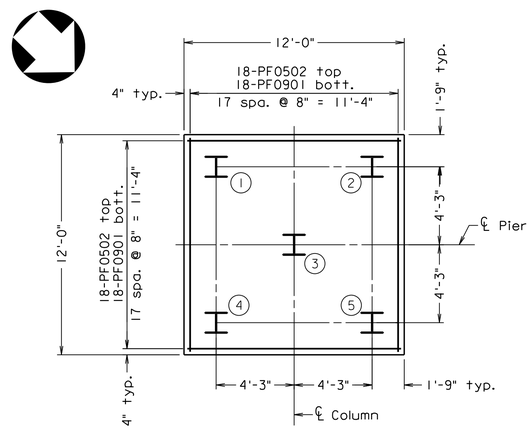

TYPICAL FOOTING PLAN

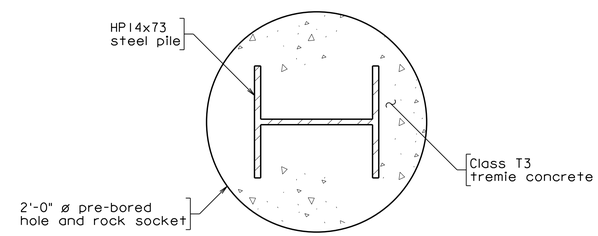

SECTION D-D

Not to scale

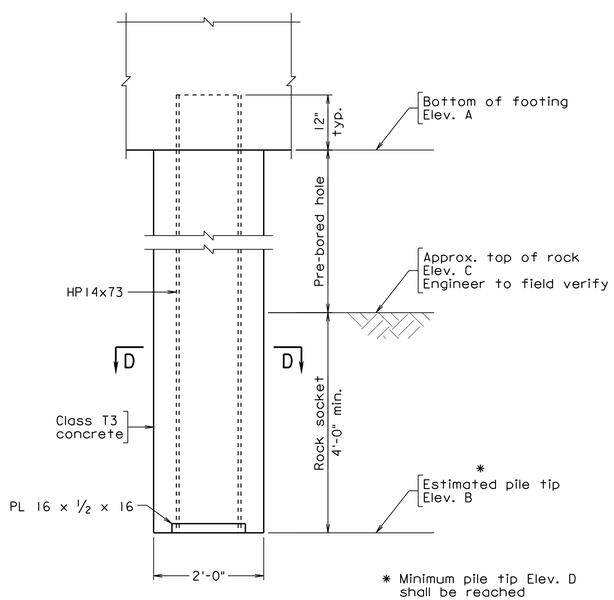

PRE-BORED PILE DETAIL

Not to scale

PILE DATA TABLE

Substructure Unit	Footing	Nominal Axial Resistance (Tons/pile)	Factored Axial Resistance (Tons/pile)	Bottom of Footing Elevation A	Estimated Tip Elevation B	Minimum Tip Elevation D	Approximate Top of Rock Elevation C
Pier	1	364	193	287.5	262.0	274.5	266.0
Pier	2	364	193	287.5	268.8	274.5	272.8
Pier	3	364	193	287.5	274.5	274.5	279.5

The Strength Limit State controls the pile design.

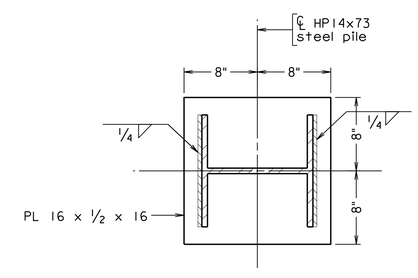

BASE PLATE DETAIL

Not to scale

PRELIMINARY PLANS

THESE PLANS NOT TO BE USED FOR CONSTRUCTION

Scale: ¼" = 1'-0" unless otherwise noted

Dewberry

Dewberry Engineers Inc.
8401 ARLINGTON BLVD.
FAIRFAX, VA 22031
PHONE: 703.849.0100
FAX: 703.849.0518

HARTLAND DRIVE
OVER
BROAD RUN
LOUDOUN COUNTY
CPAP-2020-0009

SEAL

DEWBERRY ENGINEERS INC.
FAIRFAX, VA
STRUCTURAL ENGINEER

No.	DATE	BY	Description

REVISIONS

DESIGNED BY EJA
DRAWN BY JPD
CHECKED BY GJM
DATE APRIL 2020

TITLE

PIER FOOTING PLAN AND DETAILS

PROJECT NO. 50113885

XXX-XX

SHEET NO. 21 of 49

Received by VMRC September 1, 2020 /blh

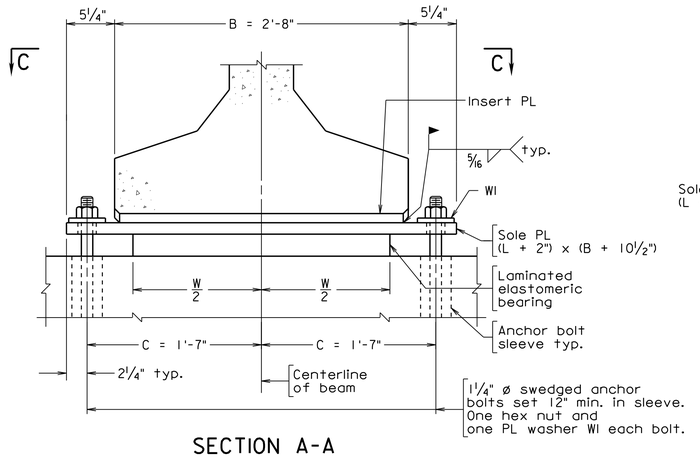

SECTION A-A

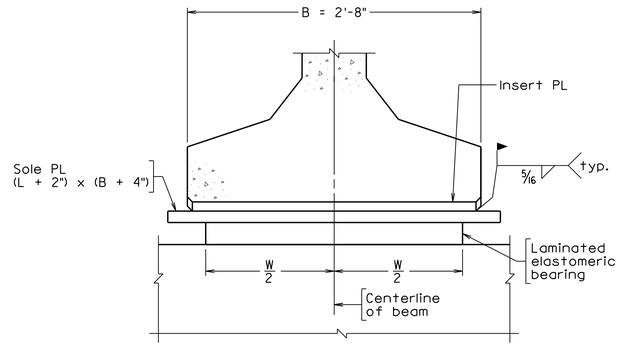

SECTION B-B

Notes:

Material: Elastomer - 50 durometer hardness
Shim - ASTM A36 or A1011 mild steel
Standard steel pipe - ASTM A53 Grade B
High strength anchor bolts - ASTM F1554, Grade 55

The Contractor may elect not to provide anchor bolt sleeves at any locations and cast the anchor bolts directly into concrete at their own risk and expense.

Elastomeric bearings shall be molded as a single unit.

Bevel sole plates to grade shown in table. Minimum ¾" thickness.

Insert plate shall provide uniform bearing over its entire contact area. For insert plate details, see sheet 27.

Sole plates, insert plates, anchor bolts, nuts and washers shall be galvanized.

* Centerline of beam (including center line and text) shall be marked on the top, bottom and side surfaces of the laminated elastomeric bearing prior to shipping. The markings shall be done with an indelible ink or flexible paint of contrasting color.

** For steel dowel and closure diaphragm details, see sheets 21 and 30.

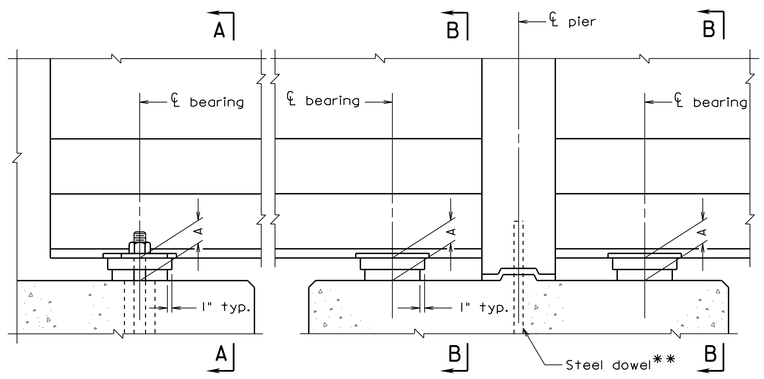

ABUTMENT ELEVATION

PIER ELEVATION
FIXED BEARING
CONTINUOUS SPANS

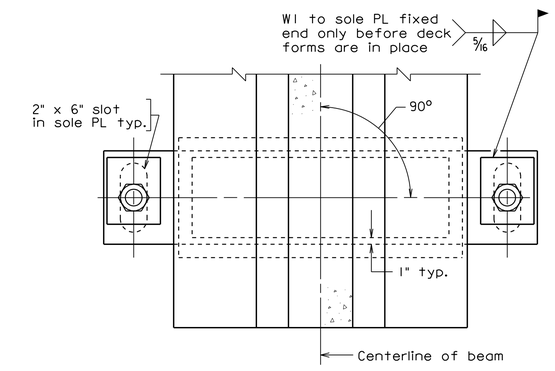

SECTION C-C

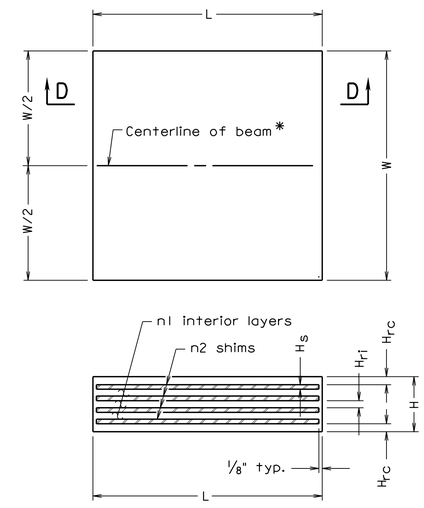

SECTION D-D

LAMINATED ELASTOMERIC BEARING

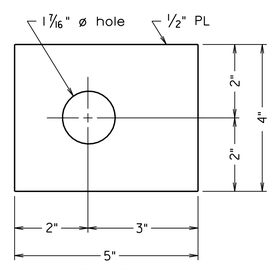

WASHER W1

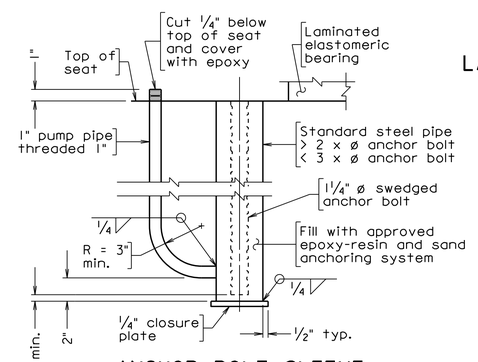

ANCHOR BOLT SLEEVE

Orient pump pipe away from bearing

Span	Abut.	Pier	Beam Type	Bearing Type	A	Laminated Elastomeric Bearing						Grade %	Total Load (kips)
						W	L	H	H_{rc}	n1 @ H_{ri}	n2 @ H_s		
All	All	-	PCBT	Exp.	4⅞"	24"	13"	4"	¼"	5 @ 0.5565"	6 @ 0.1196"	1.58%	217.5
All	-	All	PCBT	Fix.	4⅞"	24"	13"	4"	¼"	5 @ 0.5565"	6 @ 0.1196"	1.58%	243.4

Not to scale

PRELIMINARY PLANS

THESE PLANS NOT TO BE USED FOR CONSTRUCTION

Dewberry

Dewberry Engineers Inc.
8401 ARLINGTON BLVD.
FAIRFAX, VA 22031
PHONE: 703.849.0100
FAX: 703.849.0518

HARTLAND DRIVE
OVER
BROAD RUN
LOUDOUN COUNTY

CPAP-2020-0009

SEAL

DEWBERRY ENGINEERS INC.
FAIRFAX, VA
STRUCTURAL ENGINEER

No.	DATE	BY	Description

REVISIONS

DESIGNED BY MM
DRAWN BY MM
CHECKED BY KLM
DATE APRIL 2020

TITLE

PRESTRESSED
BEAM
BEARING DETAILS

PROJECT NO. 50113885

XXX-XX

Received by VMRC September 1, 2020 /blh

Notes:

For additional reinforcing steel details, see Deck Slab Plan on sheet 32.

All reinforcing bars in the deck slab, median, and railings shall be Corrosion Resistant Reinforcing Steel, Class I.

For details of rail, see sheets 33 and 34.

Legend:

- ● denotes #6 bars lapped with #4 bars over the piers.
- o denotes #6 bars placed between lapped #6 bars over the piers.

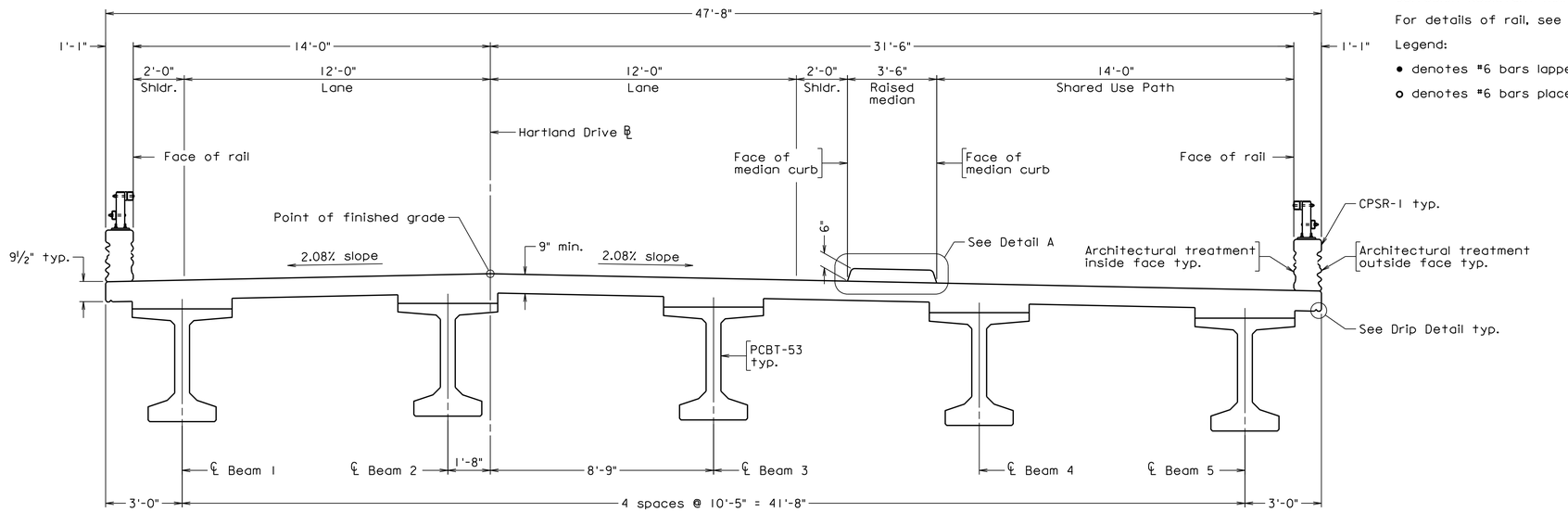

TRANSVERSE SECTION

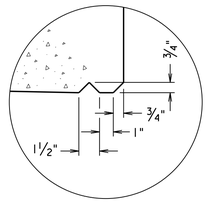

DRIP DETAIL
Not to scale

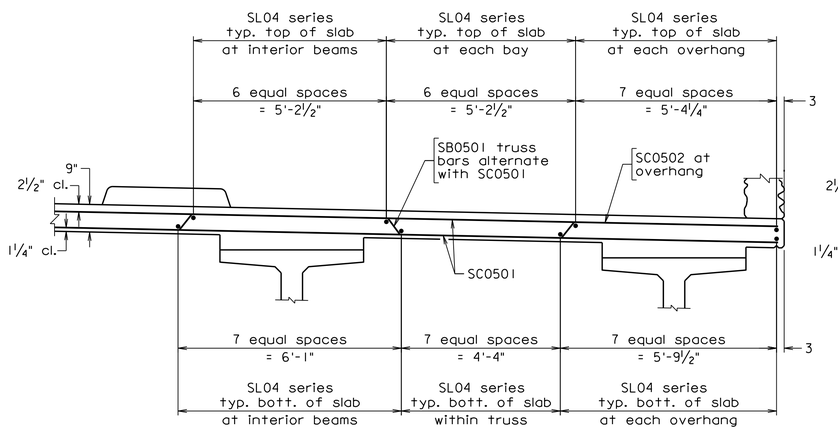

TYPICAL REINFORCEMENT DETAIL
Scale: ½" = 1'-0"

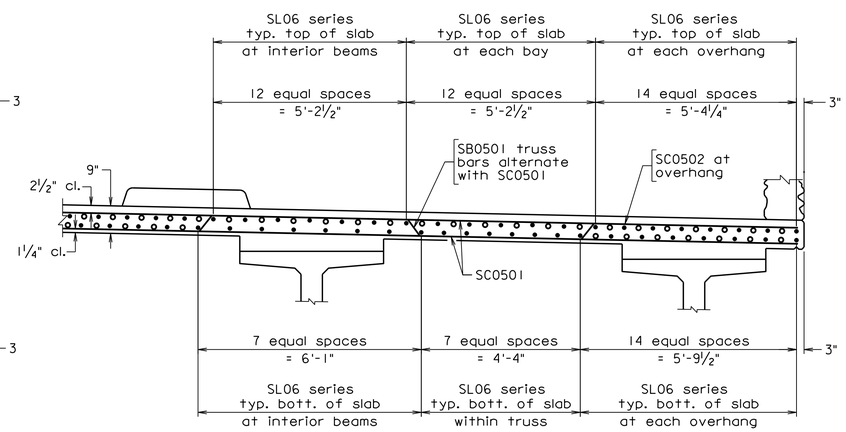

TYPICAL REINFORCEMENT DETAIL OVER PIER
Scale: ½" = 1'-0"

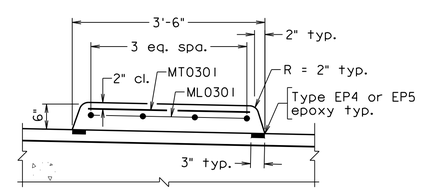

DETAIL A
Scale: ¾" = 1'-0"

PRELIMINARY PLANS

THESE PLANS NOT TO BE USED FOR CONSTRUCTION

Scale: ⅜" = 1'-0" unless otherwise noted

023

Dewberry

Dewberry Engineers Inc.
8401 ARLINGTON BLVD.
FAIRFAX, VA 22031
PHONE: 703.849.0100
FAX: 703.849.0518

HARTLAND DRIVE OVER BROAD RUN
LOUDOUN COUNTY
CPAP-2020-0009

SEAL

DEWBERRY ENGINEERS INC.
FAIRFAX, VA
STRUCTURAL ENGINEER

No.	DATE	BY	Description

REVISIONS

DESIGNED BY	TPV
DRAWN BY	JPD
CHECKED BY	KLM
DATE	APRIL 2020

TITLE

TRANSVERSE SECTION AND DETAILS

PROJECT NO. 50113885

XXX-XX

Received by VMRC September 1, 2020 /blh

Notes:

For prestressed concrete beam details, see sheets 25 thru 28.

For intermediate diaphragm details, see sheet 29.

For closure diaphragm details, see sheet 30.

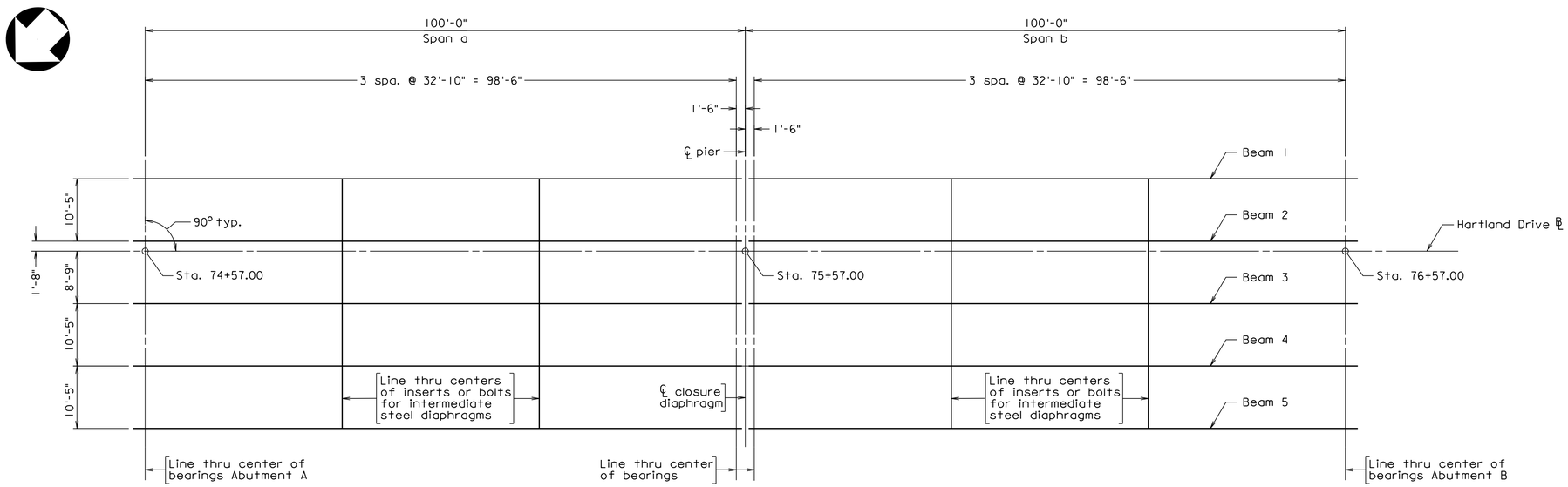

ERECTION DIAGRAM

PRELIMINARY PLANS

THESE PLANS NOT TO BE USED FOR CONSTRUCTION

Scale: 3/32" = 1'-0"

024

Dewberry

Dewberry Engineers Inc.
8401 ARLINGTON BLVD.
FAIRFAX, VA 22031
PHONE: 703.849.0100
FAX: 703.849.0518

HARTLAND DRIVE OVER BROAD RUN
LOUDOUN COUNTY
CPAP-2020-0009

SEAL

DEWBERRY ENGINEERS INC.
FAIRFAX, VA
STRUCTURAL ENGINEER

No.	DATE	BY	Description

REVISIONS

DESIGNED BY MM
DRAWN BY JPD
CHECKED BY KLM
DATE APRIL 2020

TITLE

ERECTION DIAGRAM

PROJECT NO. 50113885

XXX-XX

SHEET NO. 24 of 49

Received by VMRC September 1, 2020 /blh

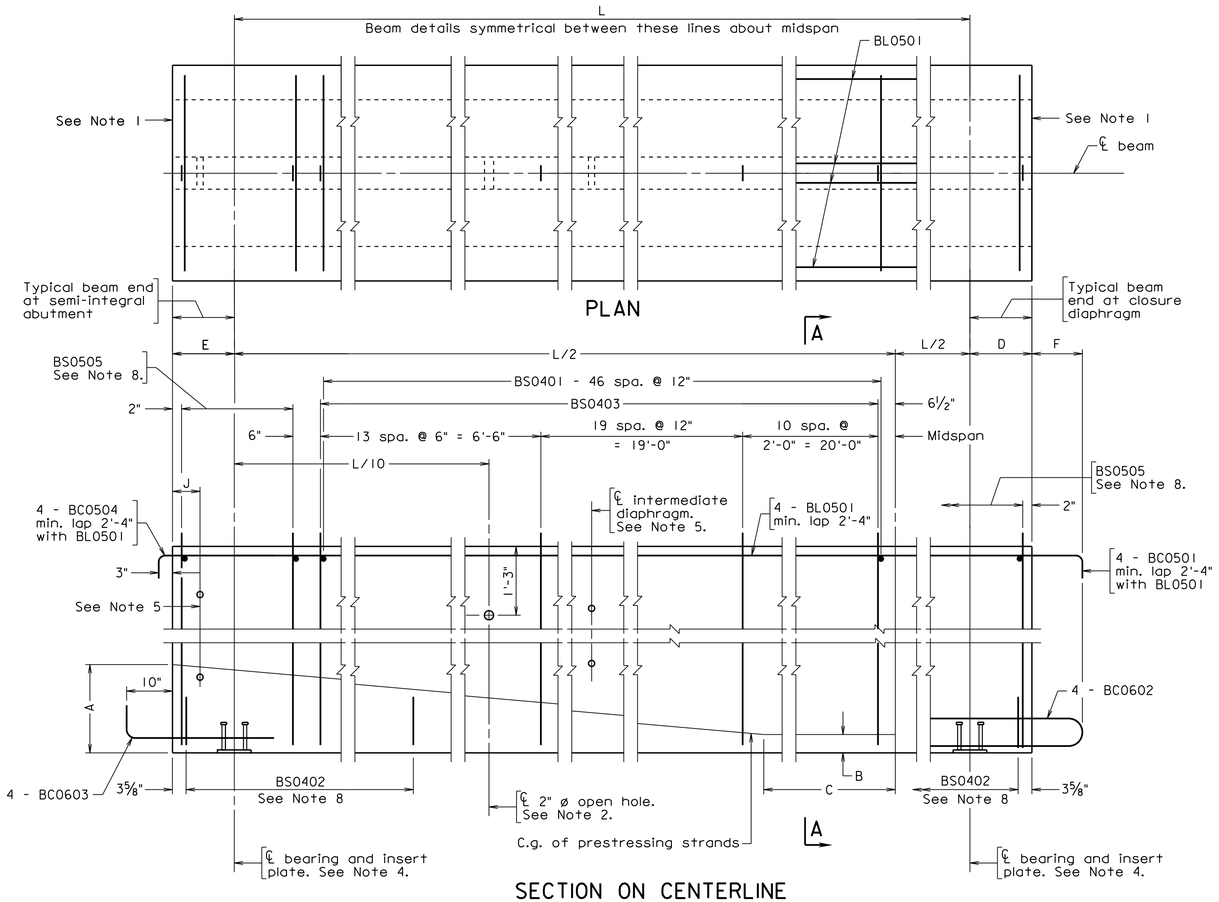

SECTION ON CENTERLINE

Notes:

1. At closure diaphragm and full or semi-integral abutment, end strands may project 1" + from beam after clipping. End of beam shall be roughened in accordance with Section 405.05 of the Road and Bridge Specifications. End of beams at these locations shall not have epoxy applied.
2. Beams shall have 2" ø open holes formed with nonrigid tubing only on stream crossings. Holes may be slightly shifted to clear reinforcing bars and strands.
3. Threaded inserts shall be provided at all exterior beams and at interior beams where line of diaphragms is discontinued at an interior beam. Threaded inserts shall be ⅞" - 9 NC threaded plain ferrule inserts suitable for thin precast concrete elements having a minimum ultimate mechanical tensile strength of 8,000 pounds.
4. For details of insert plate, see sheet 27.
5. 1½" ø open holes shall be formed with non-rigid tubing. For location of end and intermediate diaphagms, see Erection Diagram on sheet 24. For location and number of holes or inserts required for end diaphragms and intermediate diaphragms and at integral abutments, see sheets 28 and 29.
6. The Contractor, after written approval from the Engineer, may use different prestressing strand arrangement provided that the total prestressing force and c.g. are the same as shown on the plans.
7. 4 - 0.6" ø strands stressed to 8,000 lbs. may be substituted for 4 - BL05 series bars. Maximum distance from the outside strands to the flange edge may be increased from 3" to no more than 4".
8. For beam end reinforcing details, bottom flange edge details, camber diagram, dead load deflection diagram, reinforcing steel schedule and miscellaneous details, see sheets 27 and 28.
9. For beam ends that are exposed and will not be embedded into concrete, use 1" deep recesses around local strand groups with 2" minimum edge clearances and fill with pneumatically applied mortar immediately after clipping strands. An approved epoxy mortar covering the ends of strands with a minimum thickness of ⅛" may be used as an alternate. Allow strands to cool before mortar is applied. After mortar is allowed to cure, the entire end of beam shall be covered with epoxy type EP-3T.
10. For details of closure diaphragms, see sheet 30.
11. The design is based on a minimum of 90 days between release of strands and casting of closure diaphragm.
12. Design and detailing of these plans are based on the design cambers at erection (see Data and Dimension Table) and the maximum tolerance for camber differential from design camber at erection indicated in the Specifications. Design camber at erection is computed using Precast/Prestressed Concrete Institute (PCI) multipliers.
13. Lifting points assumed not to exceed ⅔ height from the end of beam.

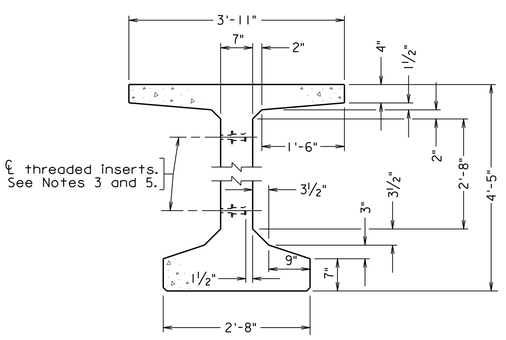

TYPICAL BEAM SECTION

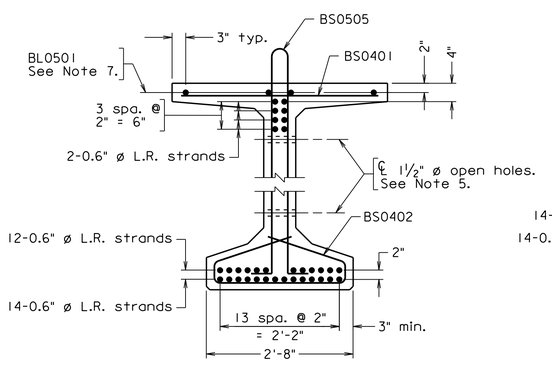

END VIEW
For dimensions not shown, see Typical Beam Section.

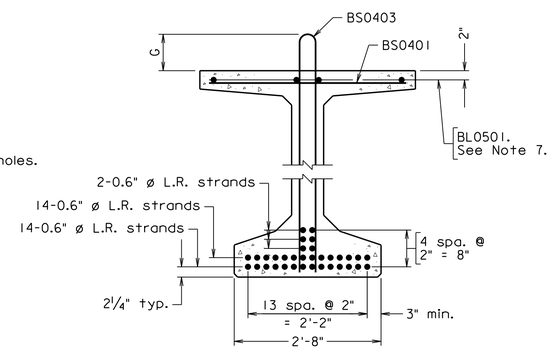

SECTION A-A
For dimensions not shown, see Typical Beam Section.

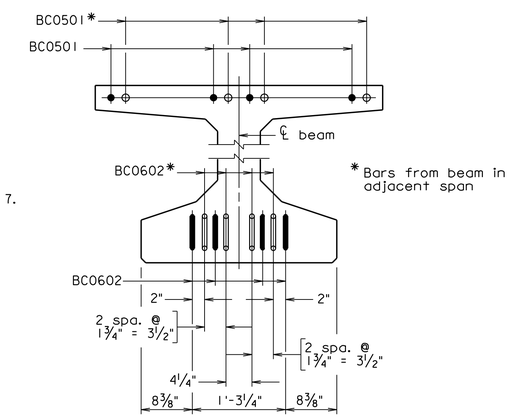

END VIEW AT CLOSURE DIAPHRAGM
Scale: 1" = 1'-0"

DATA AND DIMENSION TABLE

Span	Beam	Prestr. force at Release lb. per strand	No. and size of strands / beam	Design Camber, N At Release in.	Design Camber, N At Erection in.	A ft.-in.	B in	C ft.-in.	D ft.-in.	E ft.-in.	F in.	G in.	J in.	L ft.-in.	Assuming swivel hold-down device: Anticipated uplift force per strand, Fv - kips	Anticipated total uplift force all strands, ΣFv - kips	Anticipated number of hold-down devices per location
a	All	43,940	34 - 0.6" dia.	2⅛"	3¾"	1'-1¼"	4⅛"	10'-1⅞"	11½"	2'-1"	11"	7"	5⅝"	98'-6"	3.9	31.3	1

Scale: ¾" = 1'-0" unless otherwise noted

PRELIMINARY PLANS

THESE PLANS NOT TO BE USED FOR CONSTRUCTION

Dewberry

Dewberry Engineers Inc.
8401 ARLINGTON BLVD.
FAIRFAX, VA 22031
PHONE: 703.849.0100
FAX: 703.849.0518

HARTLAND DRIVE OVER BROAD RUN
LOUDOUN COUNTY
CPAP-2020-0009

SEAL

DEWBERRY ENGINEERS INC.
FAIRFAX, VA
STRUCTURAL ENGINEER

No.	DATE	BY	Description

REVISIONS

DESIGNED BY	MM
DRAWN BY	MM
CHECKED BY	GJM
DATE	APRIL 2020

TITLE

PRESTRESSED CONCRETE BULB-T PCBT-53 - SPAN a

PROJECT NO. 50113885

XXX-XX

Received by VMRC September 1, 2020 /blh

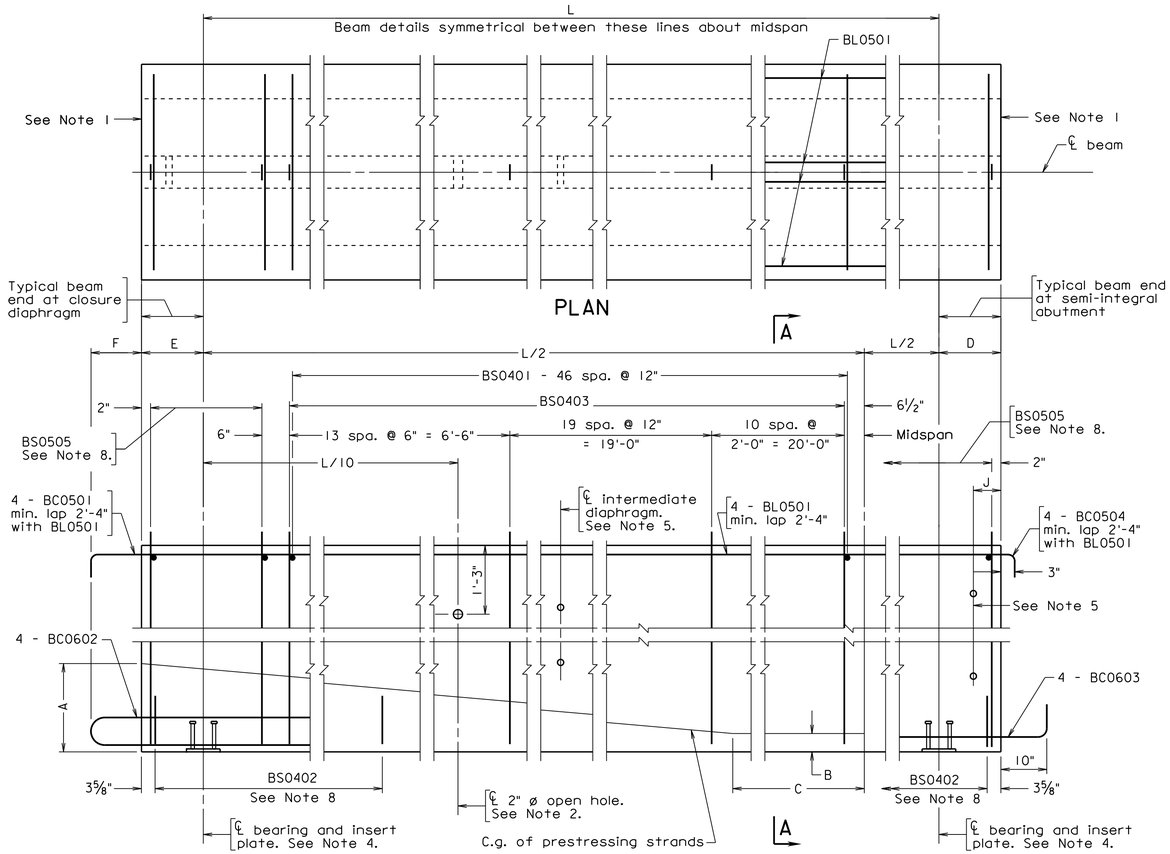

SECTION ON CENTERLINE

Notes:

1. At closure diaphragm and full or semi-integral abutment, end strands may project 1" + from beam after clipping. End of beam shall be roughened in accordance with Section 405.05 of the Road and Bridge Specifications. End of beams at these locations shall not have epoxy applied.
2. Beams shall have 2" ø open holes formed with nonrigid tubing only on stream crossings. Holes may be slightly shifted to clear reinforcing bars and strands.
3. Threaded inserts shall be provided at all exterior beams and at interior beams where line of diaphragms is discontinued at an interior beam. Threaded inserts shall be ⅞" - 9 NC threaded plain ferrule inserts suitable for thin precast concrete elements having a minimum ultimate mechanical tensile strength of 8,000 pounds.
4. For details of insert plate, see sheet 27.
5. 1½" ø open holes shall be formed with non-rigid tubing. For location of end and intermediate diaphagms, see Erection Diagram on sheet 24. For location and number of holes or inserts required for end diaphragms and intermediate diaphragms and at integral abutments, see sheets 28 and 29.
6. The Contractor, after written approval from the Engineer, may use different prestressing strand arrangement provided that the total prestressing force and c.g. are the same as shown on the plans.
7. 4 - 0.6" ø strands stressed to 8,000 lbs. may be substituted for 4 - BL05 series bars. Maximum distance from the outside strands to the flange edge may be increased from 3" to no more than 4".
8. For beam end reinforcing details, bottom flange edge details, camber diagram, dead load deflection diagram, reinforcing steel schedule and miscellaneous details, see sheets 27 and 28.
9. For beam ends that are exposed and will not be embedded into concrete, use 1" deep recesses around local strand groups with 2" minimum edge clearances and fill with pneumatically applied mortar immediately after clipping strands. An approved epoxy mortar covering the ends of strands with a minimum thickness of ⅛" may be used as an alternate. Allow strands to cool before mortar is applied. After mortar is allowed to cure, the entire end of beam shall be covered with epoxy type EP-3T.
10. For details of closure diaphragms, see sheet 30.
11. The design is based on a minimum of 90 days between release of strands and casting of closure diaphragm.
12. Design and detailing of these plans are based on the design cambers at erection (see Data and Dimension Table) and the maximum tolerance for camber differential from design camber at erection indicated in the Specifications. Design camber at erection is computed using Precast/Prestressed Concrete Institute (PCI) multipliers.

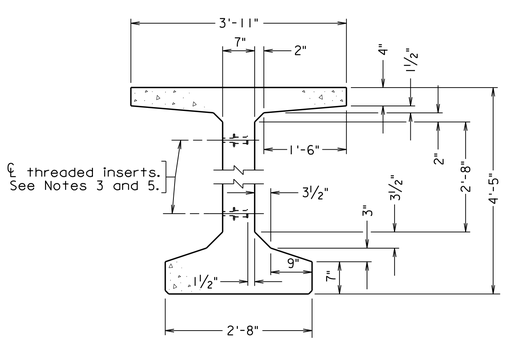

TYPICAL BEAM SECTION

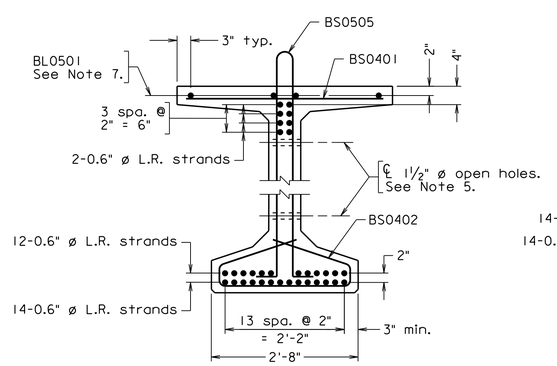

END VIEW
For dimensions not shown, see Typical Beam Section.

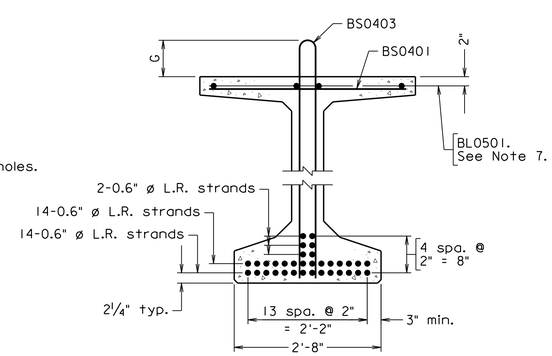

SECTION A-A
For dimensions not shown, see Typical Beam Section.

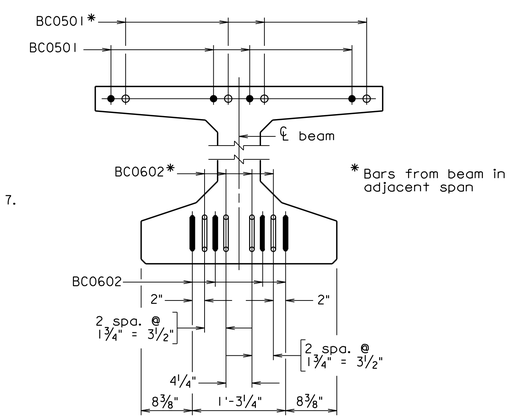

END VIEW AT CLOSURE DIAPHRAGM
Scale: 1" = 1'-0"

DATA AND DIMENSION TABLE

Span	Beam	Prestr. force at Release lb. per strand	No. and size of strands / beam	Design Camber, N At Release in.	Design Camber, N At Erection in.	A ft.-in.	B in	C ft.-in.	D ft.-in.	E ft.-in.	F in.	G in.	J in.	L ft.-in.	Assuming swivel hold-down device: Anticipated uplift force per strand, Fv - kips	Anticipated total uplift force all strands, ΣFv - kips	Anticipated number of hold-down devices per location
b	All	43,940	34 - 0.6" dia.	2⅛"	3¾"	1'-1¼"	4⅛"	10'-1⅞"	2'-1"	11½"	11"	7"	5⅝"	98'-6"	3.9	31.3	1.0

Scale: ¾" = 1'-0" unless otherwise noted

PRELIMINARY PLANS
THESE PLANS NOT TO BE USED FOR CONSTRUCTION

Dewberry
Dewberry Engineers Inc.
8401 ARLINGTON BLVD.
FAIRFAX, VA 22031
PHONE: 703.849.0100
FAX: 703.849.0518

HARTLAND DRIVE OVER BROAD RUN
LOUDOUN COUNTY
CPAP-2020-0009

SEAL

DEWBERRY ENGINEERS INC.
FAIRFAX, VA
STRUCTURAL ENGINEER

No.	DATE	BY	Description

REVISIONS

DESIGNED BY MM
DRAWN BY MM
CHECKED BY GJM
DATE APRIL 2020

TITLE

PRESTRESSED CONCRETE BULB-T PCBT-53 - SPAN b

PROJECT NO. 50113885

XXX-XX

Received by VMRC September 1, 2020 /blh

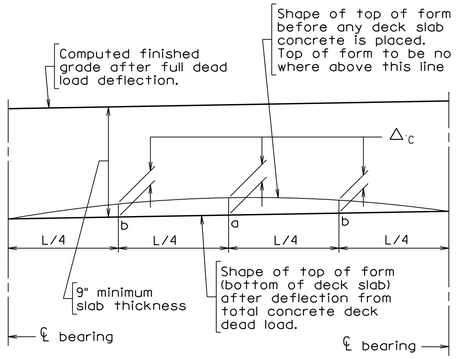

Adjustment of deck slab forms to correct for dead load deflections shall be made by varying thickness of concrete bolster between slab and beam without alteration of slab thickness. Longitudinal screed should be set above final finished grade by amounts = Δ_{C2}

Δ_{C1} = Deflection of beam from dead load of concrete deck slab, bolsters and diaphragms and does not include the deflection of the beam from its own weight.

Δ_{C2} = Deflection of composite section from dead load (e.g. parapet and curb added after deck is cast).

$\Delta_C = \Delta_{C1} + \Delta_{C2}$

ANTICIPATED DEAD LOAD DEFLECTION

Span	Beam	At a		At b	
		Δ_{C1}	Δ_{C2}	Δ_{C1}	Δ_{C2}
a	1 and 5	1¾"	0"	1¼"	0"
	2 - 4	2⅛"	0"	1½"	0"
b	1 and 5	1¾"	0"	1¼"	0"
	2 - 4	2⅛"	0"	1½"	0"

DEAD LOAD DEFLECTION DIAGRAM

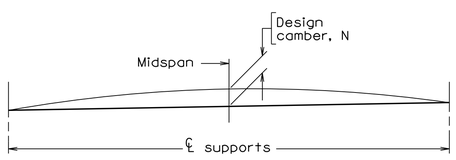

CAMBER DIAGRAM

Not to scale

REINFORCING STEEL SCHEDULE

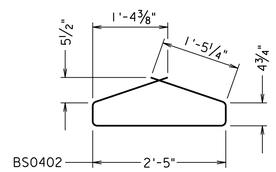

BS0402

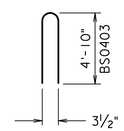

BS0403

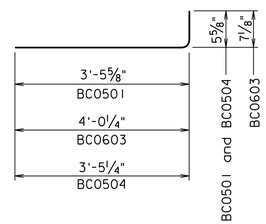

BC0501, BC0603 and BC0504

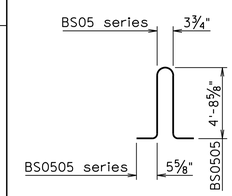

BS0505

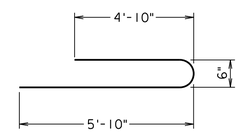

BC0602

Mark	Size	No.	Length	Pin ø	Location
BC0501 *	#5		3'-10"	2½"	Top flange - closure diaphragm
BC0602 *	#6		10'-10¼"	4½"	Bottom flange - closure diaphragm
BC0603 *	#6		4'-5½"	3¾"	Bott. flange - full or semi-integral
BC0504 *	#5		3'-9½"	2½"	Top flange - full or semi-integral
BS0401	#4		3'-7"	——	Top flange transverse
BS0402	#4		5'-9¾"	2"	Bottom flange - confinement
BS0403 *	#4		9'-10"	2½"	Stirrup outside anchorage zone
BS0505 *	#5		10'-4¼"	2½"	Anchorage zone stirrup
BL0501	#5		36'-0"	——	Top flange longitudinal

Dimensions in bending diagram are out-to-out of bars.

Reinforcing bars shown in the above schedule are for all beams shown on sheets 25 and 26 .

* Denotes reinforcing bars that shall be corrosion resistant reinforcing steel, Class 1.

At the Contractor's option and at no additional cost, bar BS0402 and BS0408 may be fabricated as a two piece bar with a minimum 1'-4" lap.

Notes:

Insert plate shall provide uniform bearing over its entire contact area.

For beam details and notes, see sheets 25 and 26.

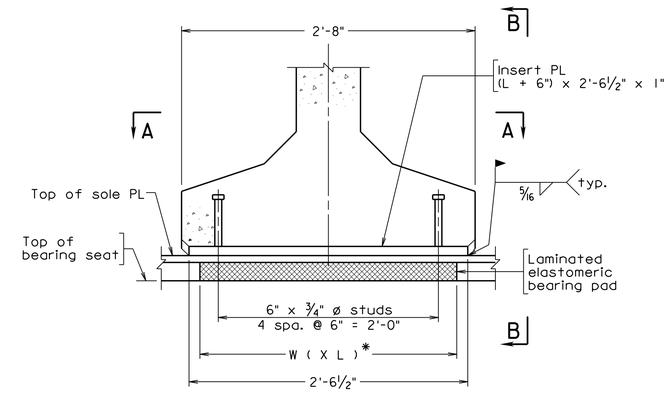

INSERT PLATE DETAILS

* For laminated elastomeric bearing pad dimensions, see sheet 22.

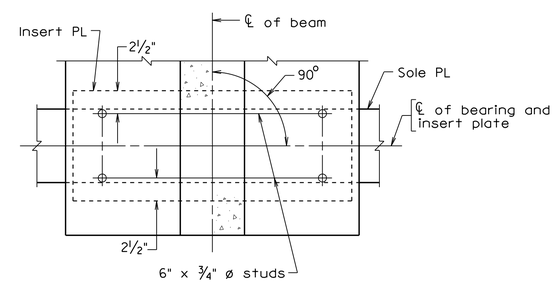

SECTION A-A

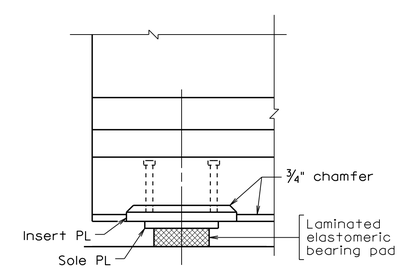

VIEW B-B

PRELIMINARY PLANS

THESE PLANS NOT TO BE USED FOR CONSTRUCTION

Not to scale

Dewberry

Dewberry Engineers Inc.
8401 ARLINGTON BLVD.
FAIRFAX, VA 22031
PHONE: 703.849.0100
FAX: 703.849.0518

HARTLAND DRIVE OVER BROAD RUN

LOUDOUN COUNTY

CPAP-2020-0009

SEAL

DEWBERRY ENGINEERS INC.
FAIRFAX, VA
STRUCTURAL ENGINEER

No.	DATE	BY	Description

REVISIONS

DESIGNED BY MM

DRAWN BY MM

CHECKED BY GJM

DATE APRIL 2020

TITLE

PRESTRESSED CONCRETE BULB-T MISCELLANEOUS BEAM DETAILS - 1

PROJECT NO. 50113885

XXX-XX

Received by VMRC September 1, 2020 /blh

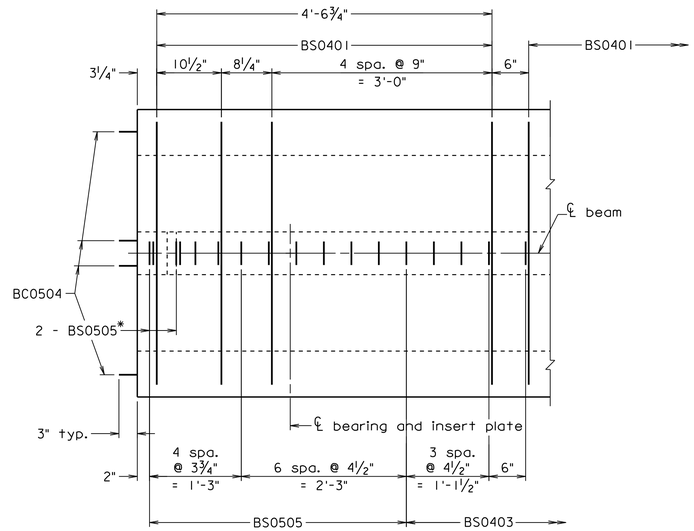

*Indicates bundled bars at each location (e.g., 2 arrowheads, first two locations)

AT SEMI-INTEGRAL ABUTMENT

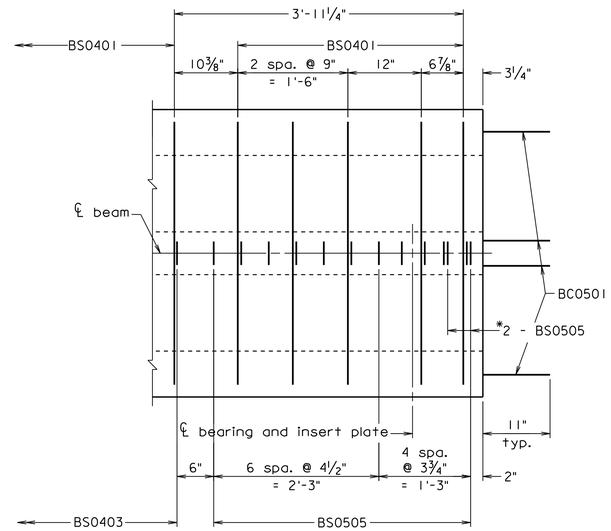

AT CLOSURE DIAPHRAGM

TOP FLANGE AND WEB REINFORCEMENT END DETAILS

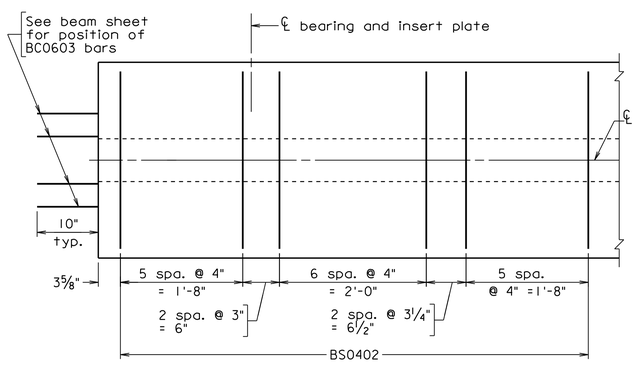

AT SEMI-INTEGRAL ABUTMENT

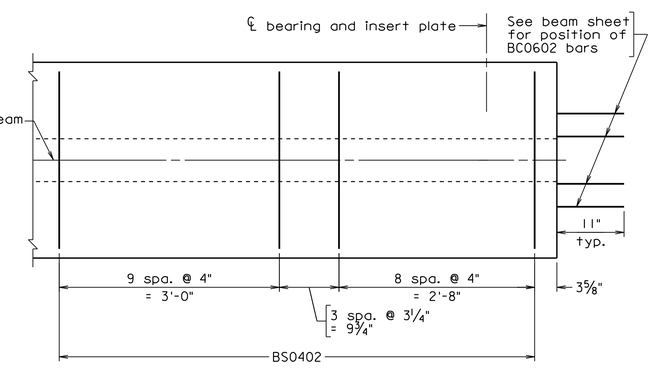

AT CLOSURE DIAPHRAGM

BOTTOM FLANGE REINFORCEMENT END DETAILS

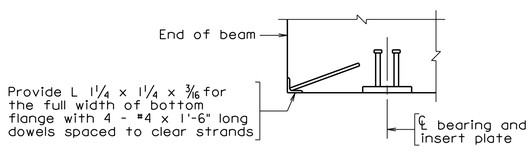

BOTTOM FLANGE EDGE DETAIL
AT SEMI-INTEGRAL ABUTMENT
Not to scale

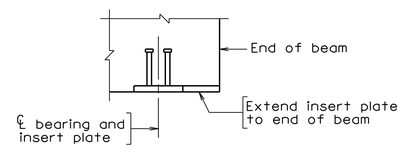

BOTTOM FLANGE EDGE DETAIL
AT CLOSURE DIAPHRAGM
Not to scale

Notes:

For beam details and notes, see sheets 25 thru 27.

BS series bars may be shifted as directed by the Engineer to clear inserts, open holes and studs in insert plates.

All bolsters in excess of 4 inches in height shall be reinforced. The bolster is anticipated to exceed 4 inches 15'-0" from each end of span a and b . Actual required reinforcement lenght will vary based on the beam camber.

SB0401 and SL0401 bars shall be CRR Class I.

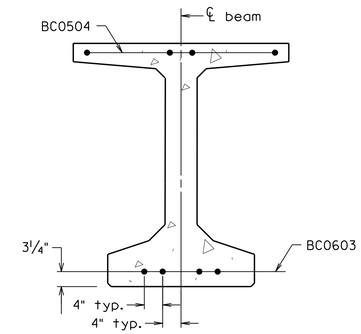

END VIEW AT
SEMI-INTEGRAL BACKWALL
Scale: ¾" = 1'-0"

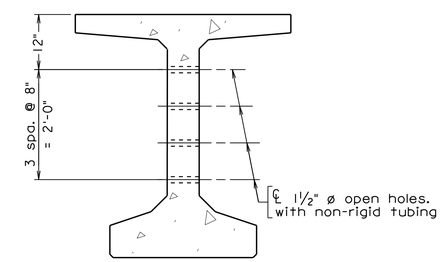

END SECTION SHOWING
LOCATION OF 1½" ø HOLES
AT SEMI-INTEGRAL BACKWALL
Scale: ¾" = 1'-0"

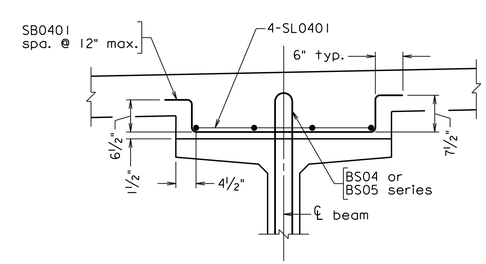

TYPICAL BOLSTER REINFORCEMENT
Scale: ¾" = 1'-0"

PRELIMINARY PLANS
THESE PLANS NOT TO BE USED FOR CONSTRUCTION

Scale: 1" = 1'-0" unless otherwise noted

Dewberry
Dewberry Engineers Inc.
8401 ARLINGTON BLVD.
FAIRFAX, VA 22031
PHONE: 703.849.0100
FAX: 703.849.0518

HARTLAND DRIVE
OVER
BROAD RUN
LOUDOUN COUNTY
CPAP-2020-0009

SEAL

DEWBERRY ENGINEERS INC.
FAIRFAX, VA
STRUCTURAL ENGINEER

No.	DATE	BY	Description

REVISIONS

DESIGNED BY	MM
DRAWN BY	MM
CHECKED BY	GJM
DATE	APRIL 2020

TITLE
PRESTRESSED CONCRETE BULB-T MISCELLANEOUS BEAM DETAILS - 2

PROJECT NO. 50113885

XXX-XX

SHEET NO. 28 of 49

Received by VMRC September 1, 2020 /blh

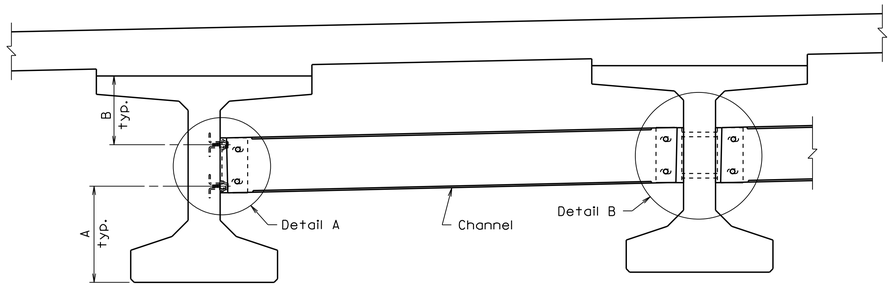

PART TRANSVERSE SECTION

Use Detail A at exterior beams and interior beams where line of diaphragms is discontinued at interior beam. Use Detail B at interior beams where line of diaphragms is continuous across the structure.

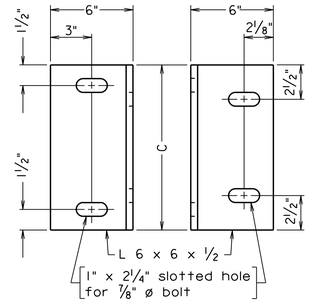

BEAM FACE DIAPHRAGM FACE

CONNECTOR PLATE DETAIL

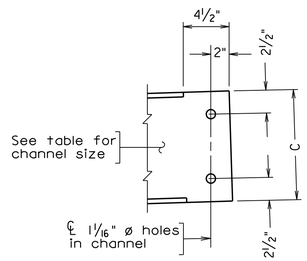

CHANNEL DETAIL

Notes:

All structural steel shall be ASTM A36.

All bolts shall be ⅞" ø H.S. bolts, ASTM F3125, Grade A325.

All H.S. bolts used for steel-to-steel connections shall be tightened in accordance with Section 407 of the Specifications.

All H.S. bolts installed in threaded inserts shall be tightened to a snug tight condition. Rotational capacity test is not required.

All diaphragm materials including bolts, nuts and washers shall be galvanized.

All threaded inserts shall be ⅞" - 9 NC threaded plain ferrule inserts suitable for thin precast concrete elements having a minimum ultimate mechanical tensile strength of 8,000 pounds.

A ½" bent plate may be used in lieu of the L 6 x 6 x ½ connector plate shown for skew angles less than or equal to 20 degrees. The ½" plate shall be shop bent to conform with the line of diaphragms.

Payment for furnishing and installing steel intermediate diaphragms shall be included in the contract unit price for prestressed concrete members.

DIMENSION TABLE

BEAM TYPE	A	B	C	CHANNEL SIZE
PCBT-53	1'-11½"	1'-5½"	1'-3"	C15x33.9

Skew angle	θ
≤ 20°	90°- skew angle
> 20°	90°

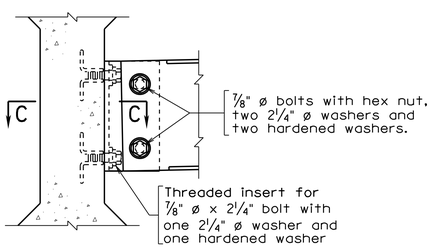

DETAIL A

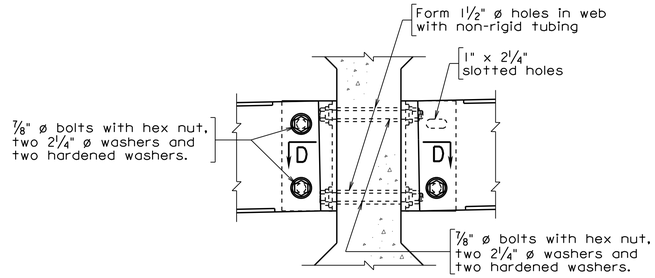

DETAIL B

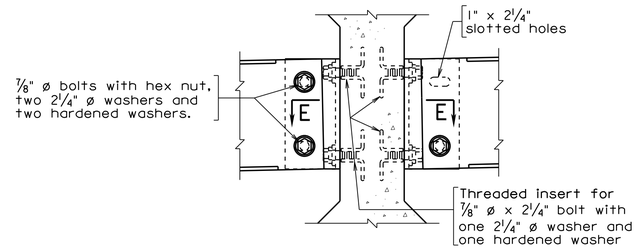

ALTERNATE DETAIL B

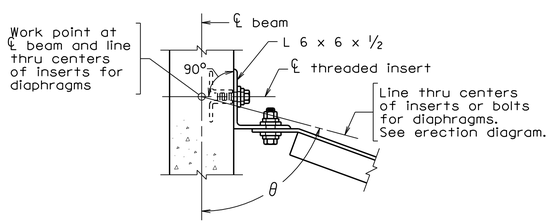

SECTION C-C

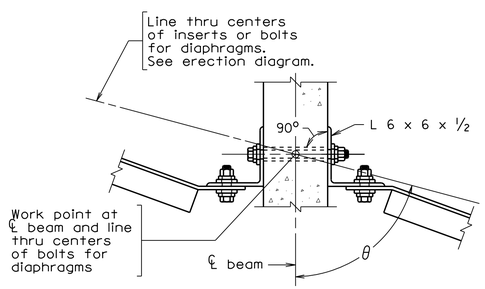

SECTION D-D

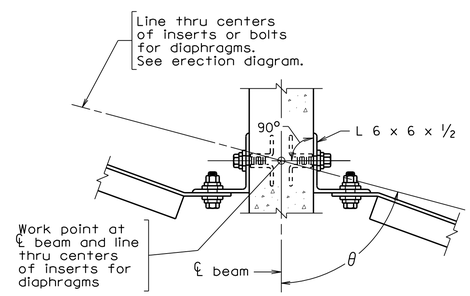

SECTION E-E

PRELIMINARY PLANS

THESE PLANS NOT TO BE USED FOR CONSTRUCTION

Not to scale

029

Dewberry

Dewberry Engineers Inc.
8401 ARLINGTON BLVD.
FAIRFAX, VA 22031
PHONE: 703.849.0100
FAX: 703.849.0518

HARTLAND DRIVE
OVER
BROAD RUN
LOUDOUN COUNTY

CPAP-2020-0009

SEAL

DEWBERRY ENGINEERS INC.
FAIRFAX, VA
STRUCTURAL ENGINEER

No.	DATE	BY	Description

REVISIONS

DESIGNED BY	MM
DRAWN BY	MM
CHECKED BY	GJM
DATE	APRIL 2020

TITLE

PCBT INTERMEDIATE DIAPHRAGM DETAILS

PROJECT NO. 50113885

XXX-XX

Received by VMRC September 1, 2020 /blh

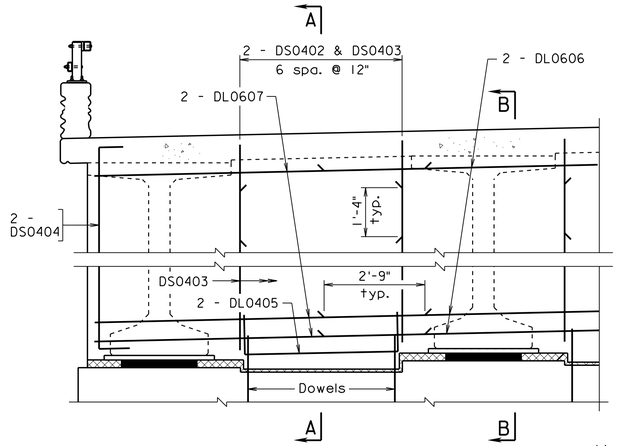

PART SECTION CLOSURE DIAPHRAGM AT FIXED SUPPORTS

Not to scale

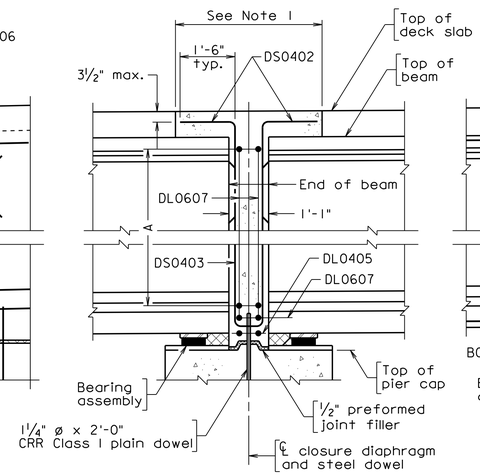

SECTION A-A

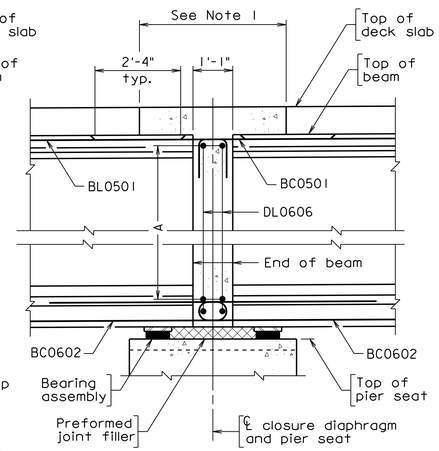

SECTION B-B

Notes:

1. This portion of the slab shall be cast with the closure diaphragm. For dimension and placement schedule, see sheet 32.
2. For shallower beams at the Contractor's option, reinforcing bars DS0402 and DS0403 may be detailed as a one piece bar.
3. For location and details of dowels and construction joints, see pier details.
4. For details of bearing assemblies, see sheet 22.
5. For beam details, see sheets 25 thru 28.
6. All preformed joint filler shall be included in the cost of superstructure concrete.
7. For dowel detail, see sheet 21.

REINFORCING STEEL SPACING	
Beam Type	A
PCBT-53	4 equal spaces

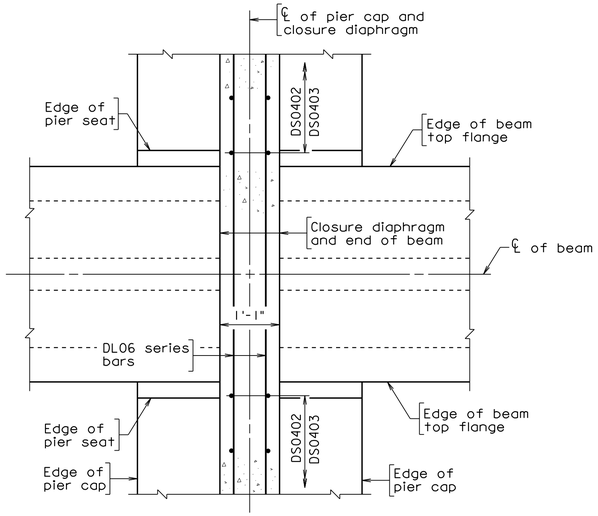

PLAN VIEW OF CLOSURE DIAPHRAGM

Scale: ¾" = 1'-0"

PRELIMINARY PLANS

THESE PLANS NOT TO BE USED FOR CONSTRUCTION

Scale: ½" = 1'-0" unless otherwise noted

030

Dewberry

Dewberry Engineers Inc.
8401 ARLINGTON BLVD.
FAIRFAX, VA 22031
PHONE: 703.849.0100
FAX: 703.849.0518

HARTLAND DRIVE OVER BROAD RUN

LOUDOUN COUNTY

CPAP-2020-0009

SEAL

DEWBERRY ENGINEERS INC.
FAIRFAX, VA
STRUCTURAL ENGINEER

No.	DATE	BY	Description

REVISIONS

DESIGNED BY	EJA
DRAWN BY	EJA
CHECKED BY	GJM
DATE	APRIL 2020

TITLE

PCBT CLOSURE DIAPHRAGM DETAILS

PROJECT NO. 50113885

XXX-XX

Received by VMRC September 1, 2020 /blh

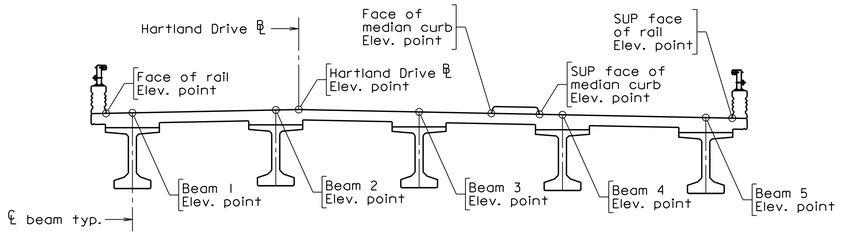

TOP OF SLAB ELEVATIONS - TRANSVERSE SECTION

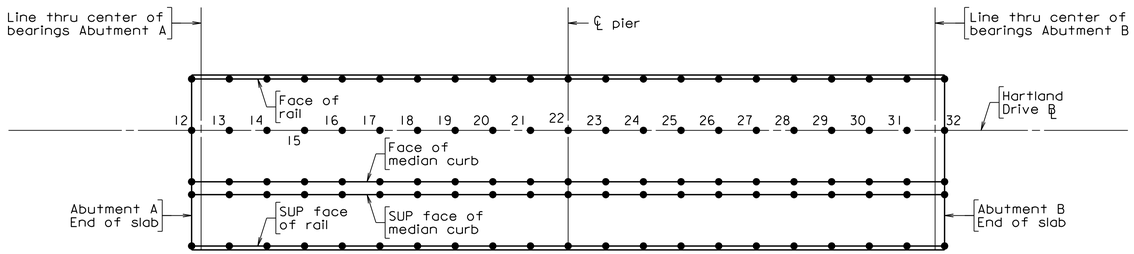

TOP OF SLAB ELEVATIONS - PLAN

Notes:

Slab elevations as shown in tables are on top of finished roadway as shown on Transverse Section.

Straight line interpolation for intermediate elevations on top of finished roadway may be made in any direction between any two adjacent points.

TOP OF SLAB ELEVATIONS ALONG ℄ BEAMS												
Span	Point	1	2	3	4	5	6	7	8	9	10	11
a	Beam 1	311.75	311.90	312.06	312.22	312.37	312.53	312.68	312.84	313.00	313.15	313.31
	Beam 2	311.97	312.12	312.28	312.43	312.59	312.75	312.90	313.06	313.21	313.37	313.53
	Beam 3	311.82	311.97	312.13	312.29	312.44	312.60	312.75	312.91	313.07	313.22	313.38
	Beam 4	311.60	311.76	311.91	312.07	312.23	312.38	312.54	312.69	312.85	313.01	313.16
	Beam 5	311.38	311.54	311.70	311.85	312.01	312.16	312.32	312.48	312.63	312.79	312.94
b	Beam 1	313.36	313.51	313.67	313.82	313.98	314.14	314.29	314.45	314.60	314.76	314.92
	Beam 2	313.57	313.73	313.88	314.04	314.20	314.35	314.51	314.66	314.82	314.98	315.13
	Beam 3	313.43	313.58	313.74	313.89	314.05	314.21	314.36	314.52	314.67	314.83	314.99
	Beam 4	313.21	313.36	313.52	313.68	313.83	313.99	314.14	314.30	314.46	314.61	314.77
	Beam 5	312.99	313.15	313.30	313.46	313.62	313.77	313.93	314.08	314.24	314.40	314.55

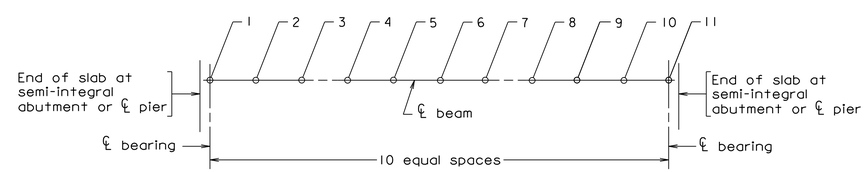

TOP OF SLAB ELEVATION ALONG ℄ BEAMS - PLAN

Showing points of top of slab elevations

TOP OF SLAB ELEVATIONS																						
Point	12	13	14	15	16	17	18	19	20	21	22	23	24	25	26	27	28	29	30	31	32
Face of Rail	311.67	311.83	311.99	312.16	312.32	312.48	312.64	312.80	312.97	313.13	313.29	313.45	313.62	313.78	313.94	314.10	314.27	314.43	314.59	314.75	314.92
Hartland Drive ℄	311.96	312.12	312.28	312.45	312.61	312.77	312.93	313.10	313.26	313.42	313.58	313.75	313.91	314.07	314.23	314.40	314.56	314.72	314.88	315.05	315.21
Face of Median Curb	311.67	311.83	311.99	312.16	312.32	312.48	312.64	312.80	312.97	313.13	313.29	313.45	313.62	313.78	313.94	314.10	314.27	314.43	314.59	314.75	314.92
SUP Face of Median Curb	311.59	311.76	311.92	312.08	312.24	312.41	312.57	312.73	312.89	313.06	313.22	313.38	313.54	313.71	313.87	314.03	314.19	314.36	314.52	314.68	314.84
SUP Face of Rail	311.30	311.47	311.63	311.79	311.95	312.12	312.28	312.44	312.60	312.77	312.93	313.09	313.25	313.42	313.58	313.74	313.90	314.07	314.23	314.39	314.55

PRELIMINARY PLANS

THESE PLANS NOT TO BE USED FOR CONSTRUCTION

Not to scale

Dewberry

Dewberry Engineers Inc.
8401 ARLINGTON BLVD.
FAIRFAX, VA 22031
PHONE: 703.849.0100
FAX: 703.849.0518

HARTLAND DRIVE OVER BROAD RUN
LOUDOUN COUNTY
CPAP-2020-0009

SEAL

DEWBERRY ENGINEERS INC.
FAIRFAX, VA
STRUCTURAL ENGINEER

No.	DATE	BY	Description

REVISIONS

DESIGNED BY MM
DRAWN BY JPD
CHECKED BY KLM
DATE APRIL 2020

TITLE

TOP OF SLAB ELEVATIONS

PROJECT NO. 50113885

XXX-XX

Received by VMRC September 1, 2020 /blh

Notes:

For spacing of SL04, SL06 and ML03 bars, see sheet 23.

For bolster reinforcement detail, see sheet 28.

For rail details see sheets 33 and 34.

All reinforcing steel in the deck slab, median, and railings shall be Corrosion Resistant Reinforcing Steel, Class I.

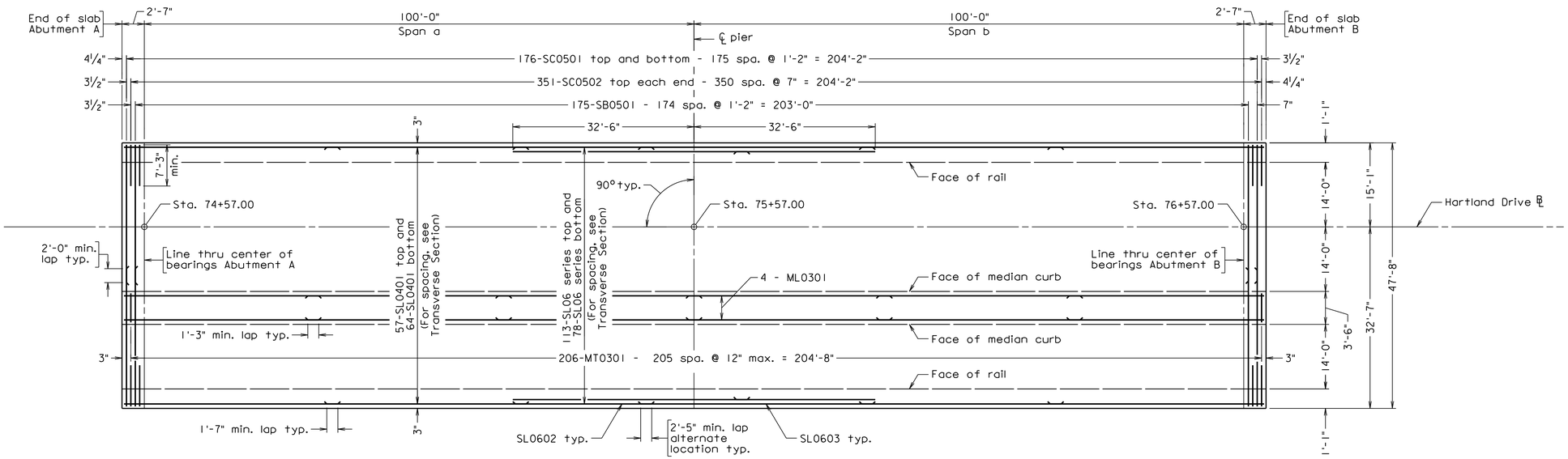

DECK SLAB PLAN

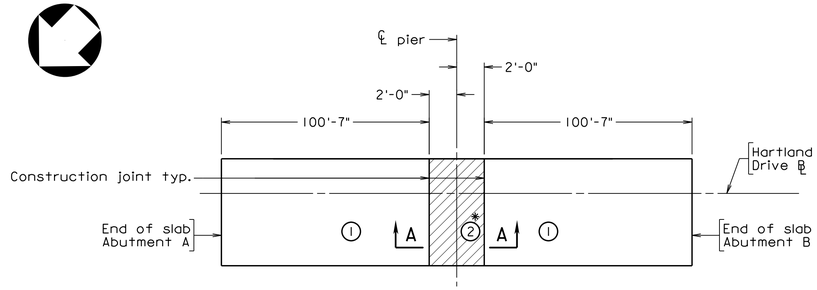

DECK SLAB CONCRETE PLACEMENT SCHEDULE

Deck Slab Concrete Placement Schedule Notes:

Sections 1 may be placed in any order or simultaneously.

Sections 2 shall be placed after adjacent sections 1.

Sections 2 shall not be placed until a minimum of 90 days has elapsed from the release of strands in the beams.

* Closure diaphragm and portion of deck slab above shall be cast together without a construction joint. For closure diaphragm details, see sheet 30.

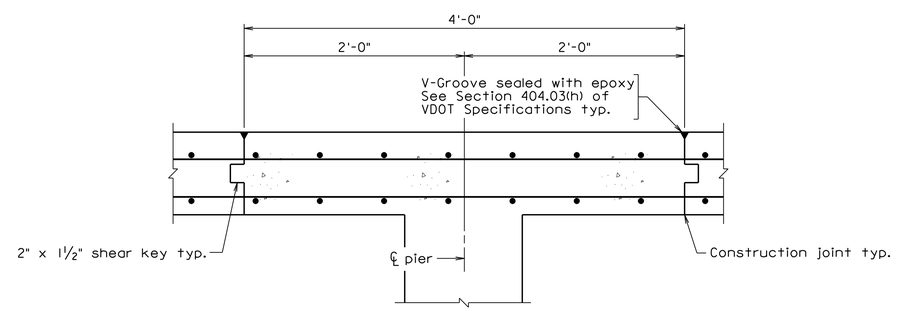

SECTION A-A

Bars extending into deck from closure diaphragm not shown.

PRELIMINARY PLANS

THESE PLANS NOT TO BE USED FOR CONSTRUCTION

Not to scale

032

Dewberry

Dewberry Engineers Inc.
8401 ARLINGTON BLVD.
FAIRFAX, VA 22031
PHONE: 703.849.0100
FAX: 703.849.0518

HARTLAND DRIVE OVER BROAD RUN

LOUDOUN COUNTY

CPAP-2020-0009

SEAL

DEWBERRY ENGINEERS INC.
FAIRFAX, VA
STRUCTURAL ENGINEER

No.	DATE	BY	Description

REVISIONS

DESIGNED BY TPV

DRAWN BY JPD

CHECKED BY KLM

DATE APRIL 2020

TITLE

DECK SLAB PLAN

PROJECT NO. 50113885

XXX-XX

Received by VMRC September 1, 2020 /blh

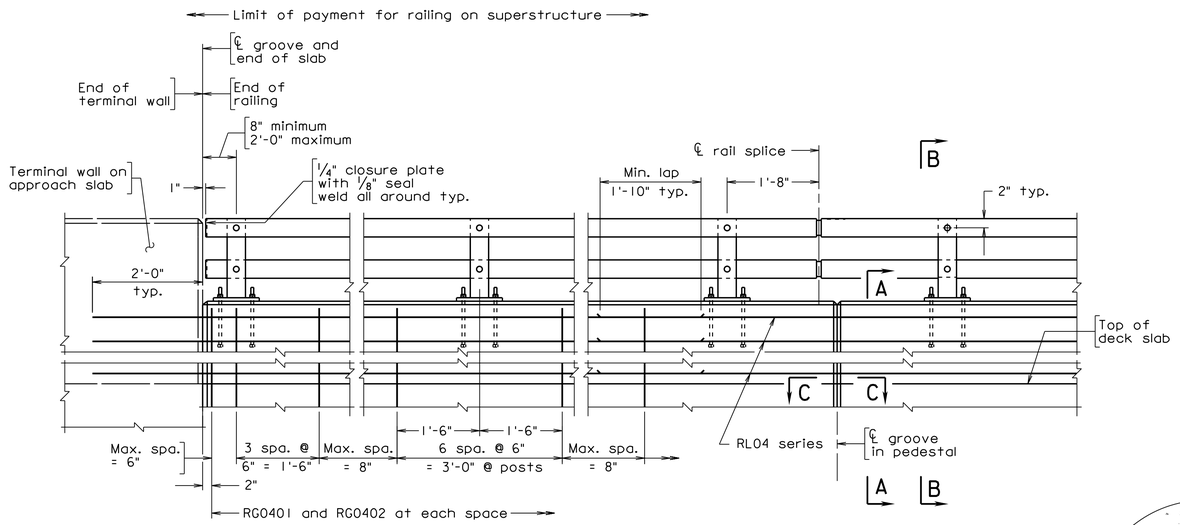

ABUTMENTS
Terminal Wall on Approach Slab

ELEVATION

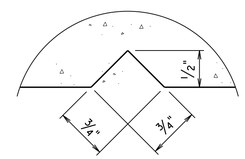

SECTION C-C
Full scale

Groove detail for both sides of rail

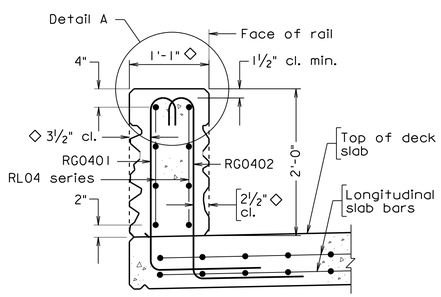

SECTION A-A
Scale: 1" = 1'-0"

Transverse rebars in deck slab not shown for clarity

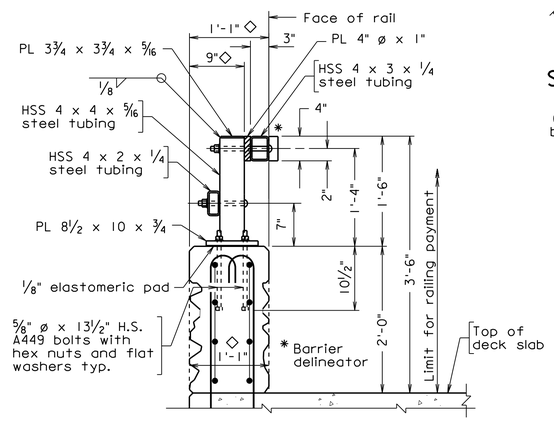

SECTION B-B
Scale: 1" = 1'-0"

Bolts through base plate shall be contained inside rebar cage

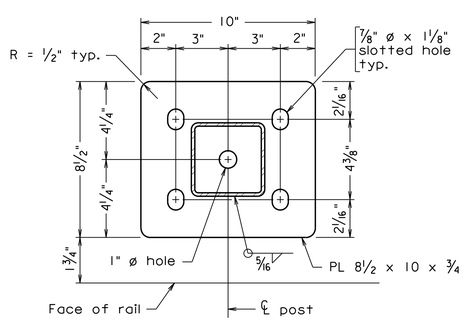

BASE PLATE DETAIL
Not to scale

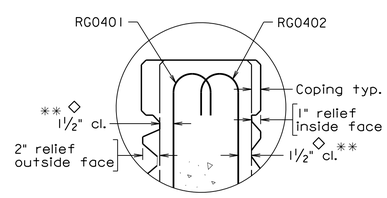

DETAIL A
Not to scale

Scale: 3/4" = 1'-0" unless otherwise noted

Notes:

Plan dimensions shown are measured in the respective horizontal and vertical planes.

The Contractor shall determine all dimensions and details necessary for installation.

All concrete shall be Low Shrinkage Class A4 Modified.

All bevels for concrete shall be 3/4".

All reinforcing steel shall be Corrosion Resistant Reinforcing Steel, Class I.

For details and reinforcing steel schedule of terminal wall, see sheets 35 and 36.

Posts and rail members shall be ASTM A500 Grade B steel. Plates shall be ASTM A36 steel. Steel pipe sleeves shall be ASTM A53.

Bolts for attaching rails to post are 3/4" diameter round head (with slot in head), ASTM A449. All other bolts shall be ASTM F3125 Grade A325 unless otherwise indicated in the details. Nuts shall be ASTM A563 Grade DH or ASTM A194 Grade 2H. Washers shall be ASTM F436.

For bolts attaching rails to posts, bolt extensions beyond nut shall be limited to the smaller of one and a half finishing turns or 1/4". If the extension is longer, excess shall be cut off and the edges of the bolt end ground so that no sharp edges remain. Cold galvanizing shall be applied to damaged galvanized areas.

All bolts shall be snug tightened.

All steel shall be hot dip galvanized.

Posts shall be equally spaced within a span. Maximum spacing is 6'-8".

Posts shall be seated on neoprene pads 1/8" minimum thickness, having a nominal durometer hardness of 60. Pads shall conform to post base dimensions.

Posts shall be vertical in transverse direction and normal to longitudinal profile grade. Cut bottom of posts to meet these configurations.

Rails to be continuous over a minimum of 3 posts before splicing.

Bid price for architectural treatment includes concrete in relief and coping.

◇ For dimensions and architectural treatment details, see sheet 37. For minimum cover, see Detail A.

** The cover tolerance referenced in the VDOT Road and Bridge Specifications as -0" to +1/2" is shifted to -1/4" to +1/4" for placement of the RG04 series bars.

For additional notes, see sheet 34.

REINFORCING STEEL SCHEDULE

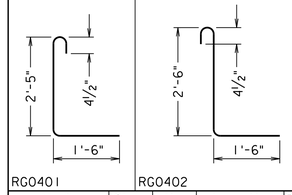

RG0401 RG0402

Mark	Size	No.	Length	Pin ø	Location
RG0401	#4			3"	Parapet
RG0402	#4			3"	Parapet
RL04	#4			—	Parapet

Dimensions in bending diagram are out-to-out of bars.

PRELIMINARY PLANS

THESE PLANS NOT TO BE USED FOR CONSTRUCTION

Dewberry

Dewberry Engineers Inc.
8401 ARLINGTON BLVD.
FAIRFAX, VA 22031
PHONE: 703.849.0100
FAX: 703.849.0518

HARTLAND DRIVE OVER BROAD RUN
LOUDOUN COUNTY
CPAP-2020-0009

SEAL

DEWBERRY ENGINEERS INC.
FAIRFAX, VA
STRUCTURAL ENGINEER

No.	DATE	BY	Description

REVISIONS

DESIGNED BY KLM
DRAWN BY KLM
CHECKED BY GJM
DATE APRIL 2020

TITLE
42" - CPSR RAILING WITH ARCHITECTURAL TREATMENT

PROJECT NO. 50113885

XXX-XX

Received by VMRC September 1, 2020 /blh

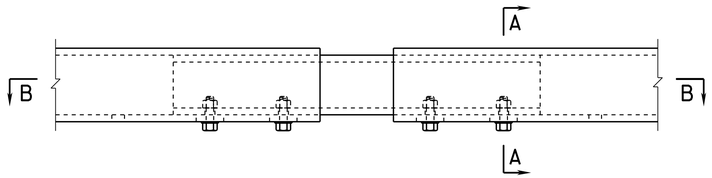

ELEVATION VIEW

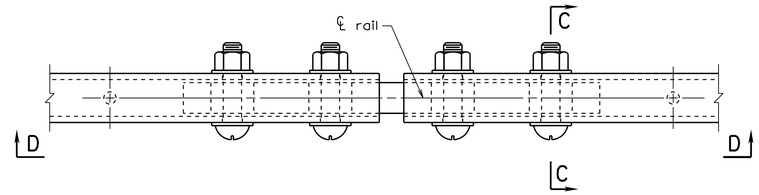

PLAN

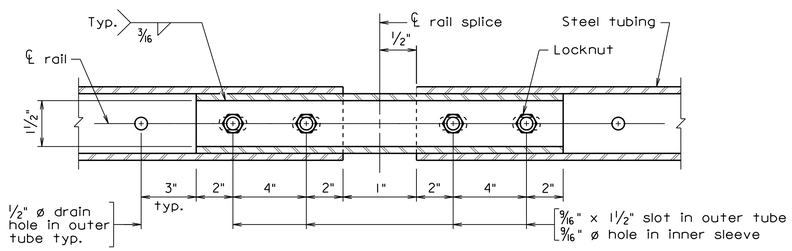

SECTION B-B

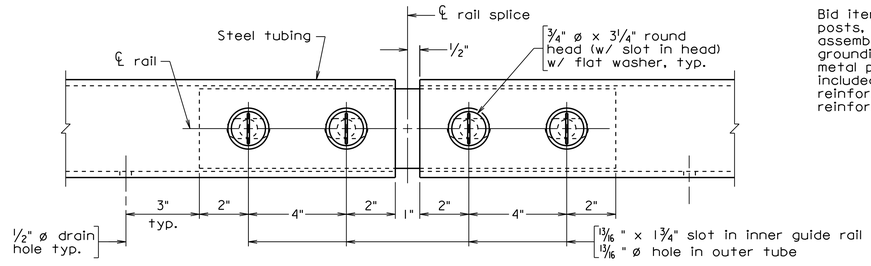

VIEW D-D

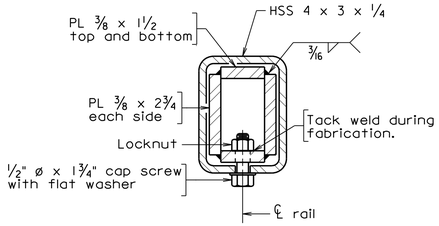

SECTION A-A
SECTION AT RAIL SPLICE

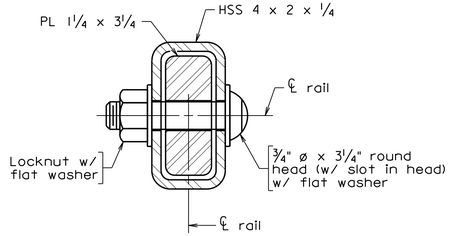

SECTION C-C
SECTION AT RAIL SPLICE

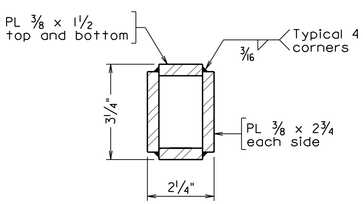

FINISHED DIMENSIONS OF INNER SLEEVE RAIL

INSIDE RAIL SPLICE DETAILS

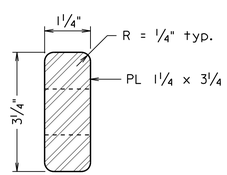

FINISHED DIMENSIONS OF INNER GUIDE RAIL

OUTSIDE RAIL SPLICE DETAILS

Notes (cont'd):

Drain holes shall be 1/2" diameter and shall be provided in all rails approximately half-way between posts. Drain holes shall be provided at each end of rail.

Barrier delineator size, color, and spacing shall be in accordance with the Specifications.

Maximum spacing of grooves in pedestal shall be limited to 3 x post spacing, shall be centered between posts and shall be no closer than 10'-0" to ends of pedestal. A groove in pedestal shall be provided at the pier.

Alternate details for inner sleeve rail fabrication and bolted connection to outer tube may be submitted, but only used if approved by the Engineer. No thru-bolt connections will be approved.

Bid item for railing shall include rails, rail posts, bearing pads, bolts, anchor assemblies, sleeves, barrier delineators, grounding materials and other associated metal parts as shown on the plans. Also included is concrete noted in the plans and reinforcing steel indicated in the reinforcing steel schedule.

PRELIMINARY PLANS

THESE PLANS NOT TO BE USED FOR CONSTRUCTION

Not to scale

034

Dewberry

Dewberry Engineers Inc.
8401 ARLINGTON BLVD.
FAIRFAX, VA 22031
PHONE: 703.849.0100
FAX: 703.849.0518

HARTLAND DRIVE OVER BROAD RUN
LOUDOUN COUNTY
CPAP-2020-0009

SEAL

DEWBERRY ENGINEERS INC.
FAIRFAX, VA
STRUCTURAL ENGINEER

No.	DATE	BY	Description

REVISIONS

DESIGNED BY KLM
DRAWN BY KLM
CHECKED BY GJM
DATE APRIL 2020

TITLE

CPSR RAIL SPLICE DETAILS

PROJECT NO. 50113885

XXX-XX

SHEET NO. 34 of 49

Received by VMRC September 1, 2020 /blh

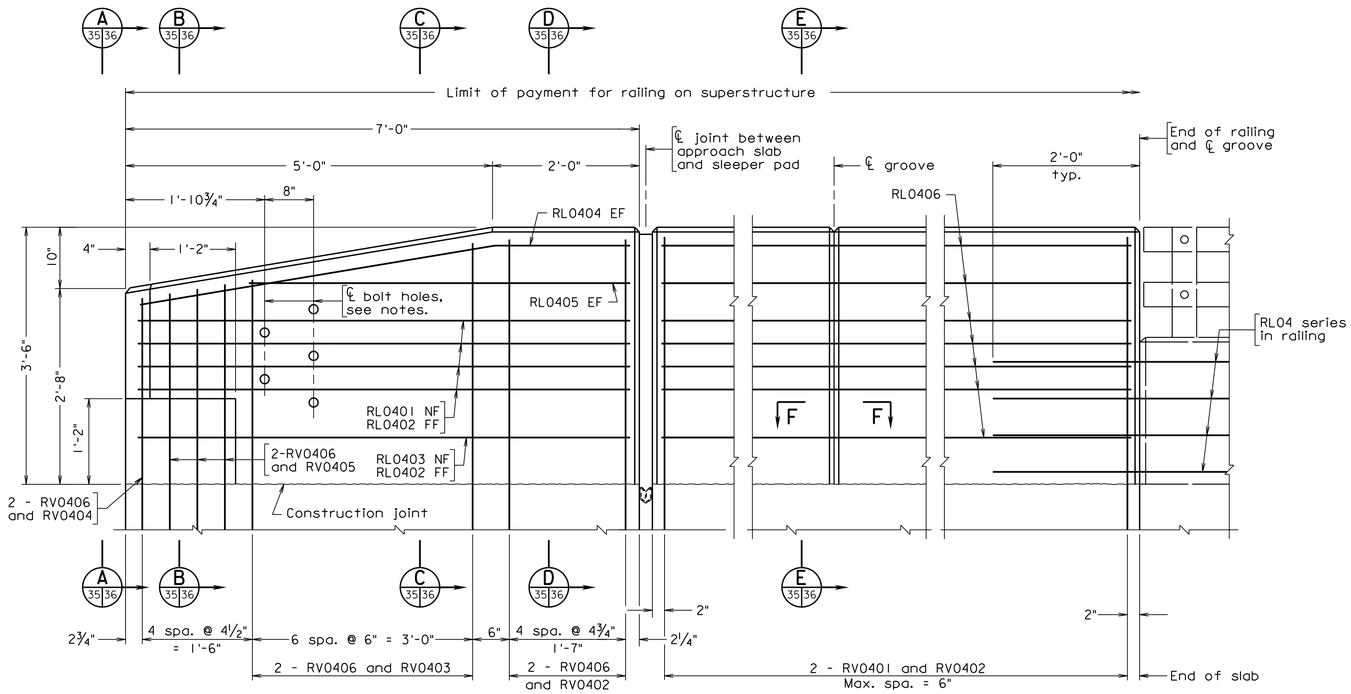

TERMINAL WALL ON SLEEPER PAD

APPROACH SLAB

ELEVATION

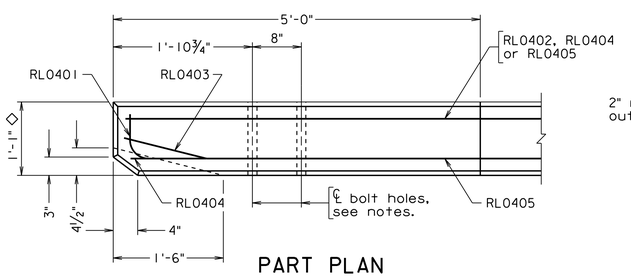

PART PLAN

RV04 series bars not shown for clarity

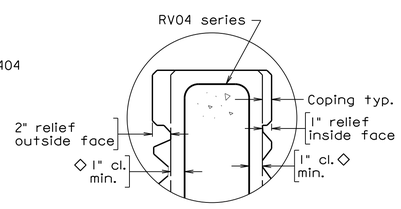

DETAIL A

Not to scale

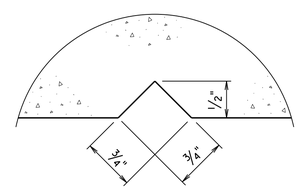

SECTION F-F

Full scale

Groove detail for both sides of rail

Notes:

Plan dimensions shown are measured in the respective horizontal and vertical planes.

The Contractor shall determine all dimensions and details necessary for installation.

All concrete shall be Low Shrinkage Class A4 Modified.

All bevels for concrete shall be ¾".

All reinforcing steel shall be Corrosion Resistant Reinforcing Steel, Class I.

For details and reinforcing steel schedule of railing, see sheet 33.

Each terminal wall shall be cast as one piece.

Terminal walls are detailed to take guardrail attachment for MGS.

Holes, where shown, shall be formed with sleeves of 1¼" diameter nominal pipe.

Spacing of grooves shall be approximately 8'-0".

Bid price for architectural treatment includes concrete in relief and coping.

◇ For dimensions and architectural treatment details, see sheet 37. For minimum cover, see Detail A.

REINFORCING STEEL SCHEDULE

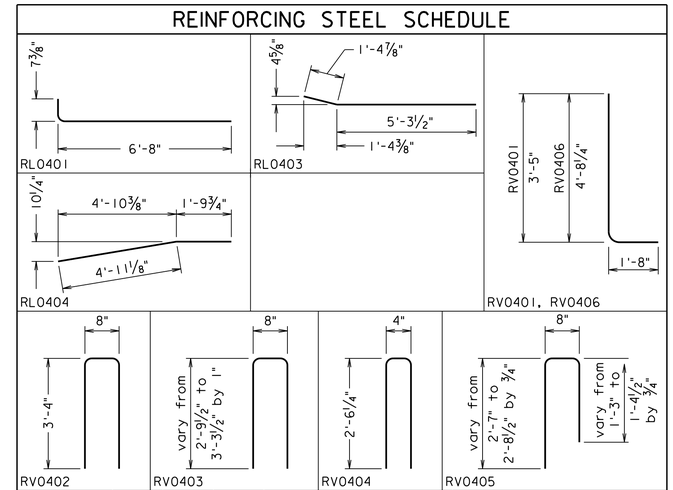

Mark	Size	No.	Pin ø	Length	Location
RL0401	#4		6"	7'-2"	Terminal wall
RL0402	#4		——	6'-8"	Terminal wall
RL0403	#4		3"	6'-8½"	Terminal wall
RL0404	#4		3"	6'-9"	Terminal wall
RL0405	#4		——	5'-2"	Terminal wall
RV0401	#4		3"	4'-11¾"	Terminal wall
RV0402	#4		3"	7'-1½"	Terminal wall
RV0403	#4		3"	From 6'-0½" to 7'-0½"	Terminal wall
RV0404	#4		3"	5'-2"	Terminal wall
RV0405	#4		3"	From 4'-3½" to 4'-6½"	Terminal wall
RV0406	#4		3"	6'-3"	Terminal wall

Dimensions in bending diagram are out-to-out of bars.

PRELIMINARY PLANS

THESE PLANS NOT TO BE USED FOR CONSTRUCTION

Scale: 1" = 1'-0" unless otherwise noted

Dewberry

Dewberry Engineers Inc.
8401 ARLINGTON BLVD.
FAIRFAX, VA 22031
PHONE: 703.849.0100
FAX: 703.849.0518

HARTLAND DRIVE OVER BROAD RUN

LOUDOUN COUNTY

CPAP-2020-0009

SEAL

DEWBERRY ENGINEERS INC.
FAIRFAX, VA
STRUCTURAL ENGINEER

No.	DATE	BY	Description

REVISIONS

DESIGNED BY KLM

DRAWN BY KLM

CHECKED BY GJM

DATE APRIL 2020

TITLE 42" - CPSR TERMINAL WALL WITH ARCHITECTURAL TREATMENT - 1

PROJECT NO. 50113885

XXX-XX

Received by VMRC September 1, 2020 /blh

Notes:

For terminal wall elevation reinforcing steel schedule and notes, see sheet 35.

For details and reinforcing steel schedule of railing, see sheet 33.

For additional details of sleeper pad see sheets 38, 39 and 40.

◇ For dimensions and architectural treatment details, see sheet 37. For minimum cover, see Detail A.

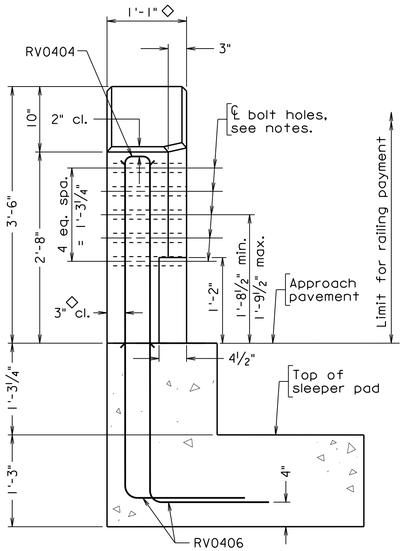

VIEW A 35/36

Showing RV04 bars only in terminal wall for clarity
Sleeper pad reinforcement and dimensions not shown for clarity

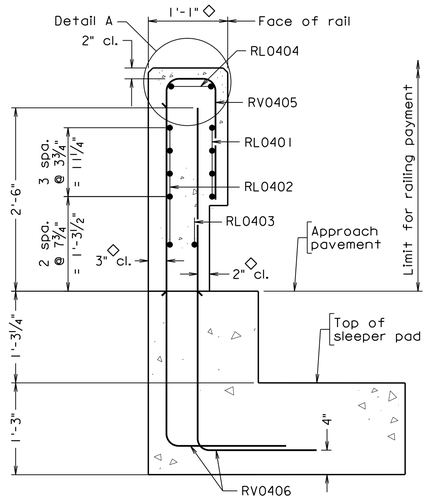

SECTION B 35/36

Sleeper pad reinforcement and dimensions not shown for clarity

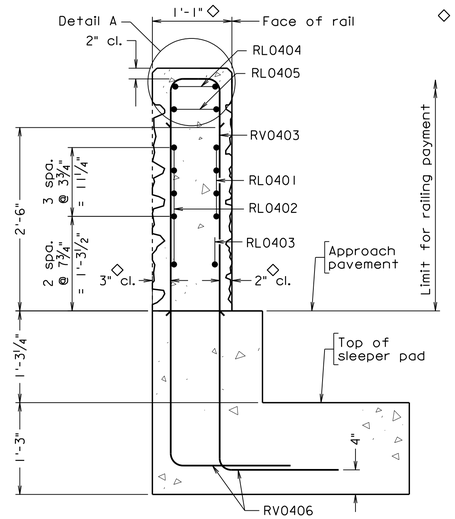

SECTION C 35/36

Sleeper pad reinforcement and dimensions not shown for clarity

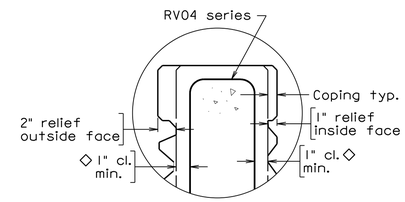

DETAIL A
Not to scale

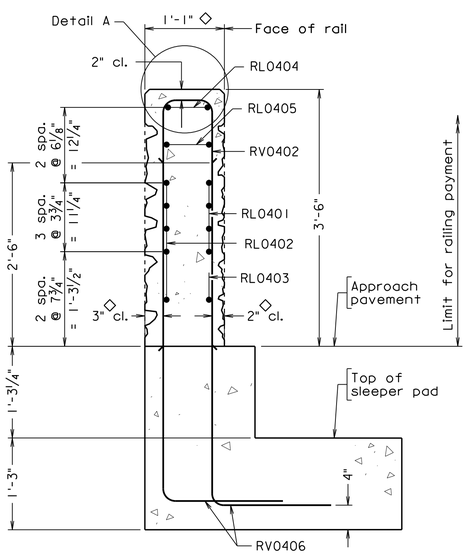

SECTION D 35/36

Sleeper pad reinforcement and dimensions not shown for clarity

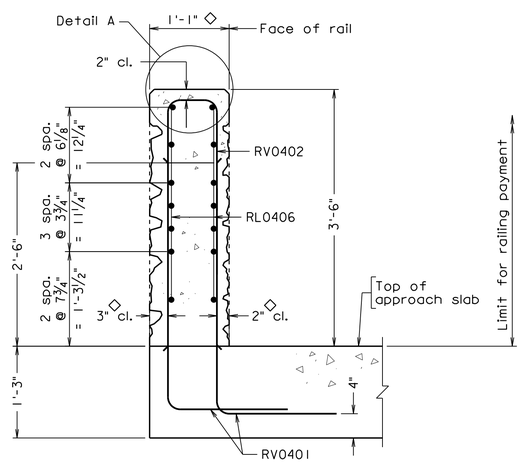

SECTION E 35/36

Approach slab reinforcement not shown for clarity

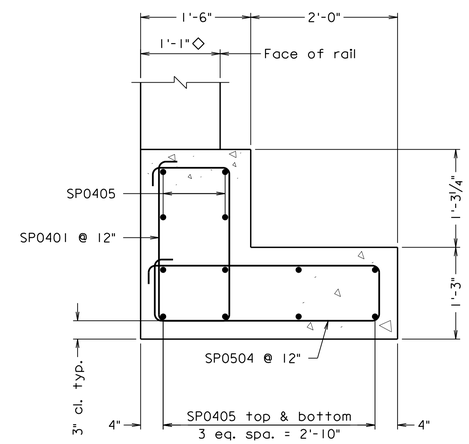

SECTION F 40/36

Terminal wall reinforcement not shown for clarity

Scale: 1" = 1'-0" unless otherwise noted

PRELIMINARY PLANS

THESE PLANS NOT TO BE USED FOR CONSTRUCTION

Dewberry

Dewberry Engineers Inc.
8401 ARLINGTON BLVD.
FAIRFAX, VA 22031
PHONE: 703.849.0100
FAX: 703.849.0518

HARTLAND DRIVE OVER BROAD RUN
LOUDOUN COUNTY
CPAP-2020-0009

SEAL

DEWBERRY ENGINEERS INC.
FAIRFAX, VA
STRUCTURAL ENGINEER

No.	DATE	BY	Description

REVISIONS

DESIGNED BY	KLM
DRAWN BY	KLM
CHECKED BY	GJM
DATE	APRIL 2020

TITLE 42" - CPSR TERMINAL WALL WITH ARCHITECTURAL TREATMENT - 2

PROJECT NO. 50113885

XXX-XX

SHEET NO. 36 of 49

036

Received by VMRC September 1, 2020 /blh

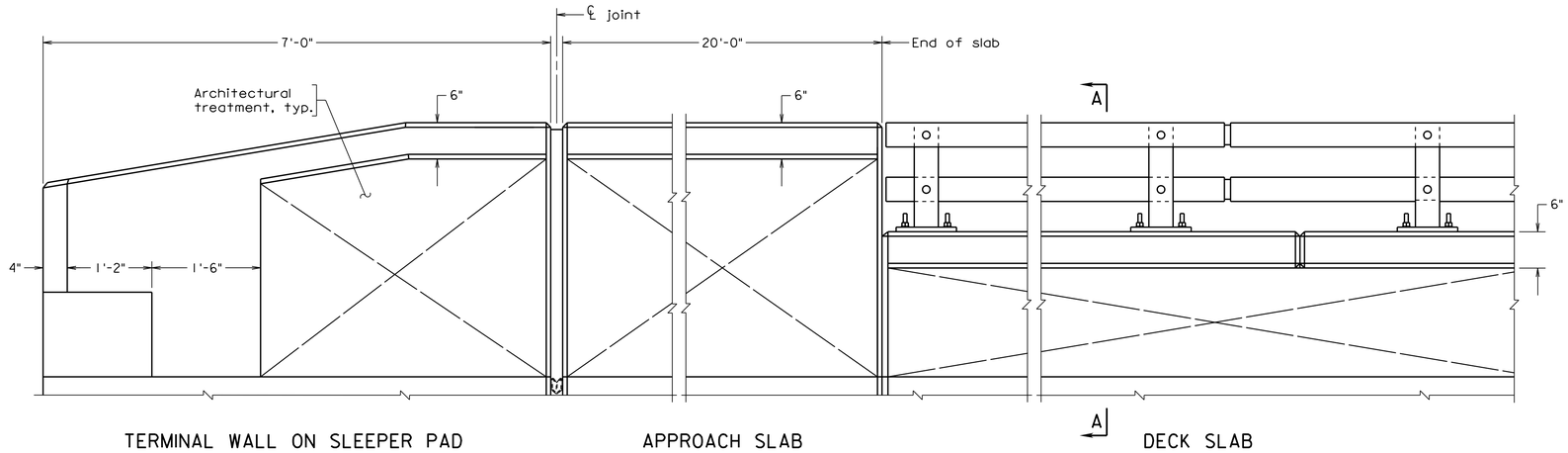

ELEVATION

Notes:

Form liner shall be arranged to produce a continuous rustic brick pattern without obvious repetition of the pattern.

Details shown for a 8'-0" long form liner. Contractor shall submit shop drawings with pattern layout for approval by the Engineer.

Architectural treatment shall be applied on both faces of the barrier.

Width of terminal wall shall be equal to the width of the concrete pedestal of the railing in Section A-A.

Contractor may form a construction joint at a groove location or edge of an architectural treatment form where the form edge is located at least 1'-8" from the nearest post centerline.

For all other dimensions and details not shown, see sheets 32 thru 36.

	Relief (in.)
r1	1"
r2	2"
r3	¾"

* r1 : relief on inside face is limited to 1"
r2 : relief on outside face is limited to 2"

** r = 0" for r2 ≤ 1"
r = 1" for 1" < r2 ≤ 2"

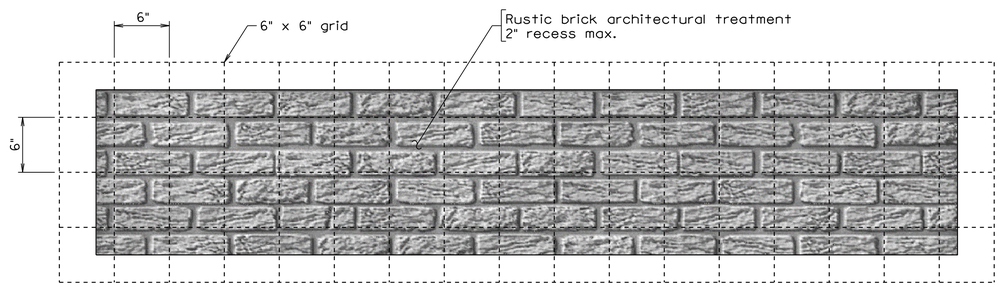

RUSTIC BRICK TEXTURE DETAIL
Parapet - Outside Face
(Inside Face similar)

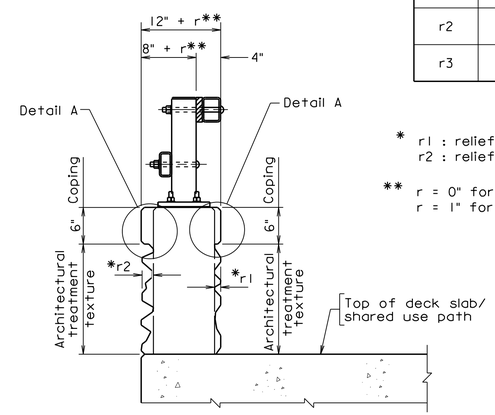

SECTION A-A

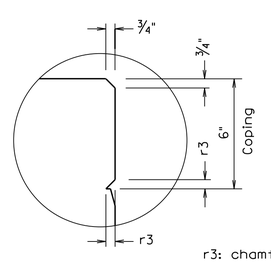

r3: chamfer size, ¾" min.

DETAIL A

PRELIMINARY PLANS
THESE PLANS NOT TO BE USED FOR CONSTRUCTION

Not to scale

037

Dewberry

Dewberry Engineers Inc.
8401 ARLINGTON BLVD.
FAIRFAX, VA 22031
PHONE: 703.849.0100
FAX: 703.849.0518

HARTLAND DRIVE OVER BROAD RUN
LOUDOUN COUNTY
CPAP-2020-0009

SEAL

DEWBERRY ENGINEERS INC.
FAIRFAX, VA
STRUCTURAL ENGINEER

No.	DATE	BY	Description

REVISIONS

DESIGNED BY KLM
DRAWN BY KLM
CHECKED BY GJM
DATE APRIL 2020

TITLE

ARCHITECTURAL TREATMENT FOR CPSR RAILING

PROJECT NO. 50113885

XXX-XX

SHEET NO. 37 of 49

Received by VMRC September 1, 2020 /blh

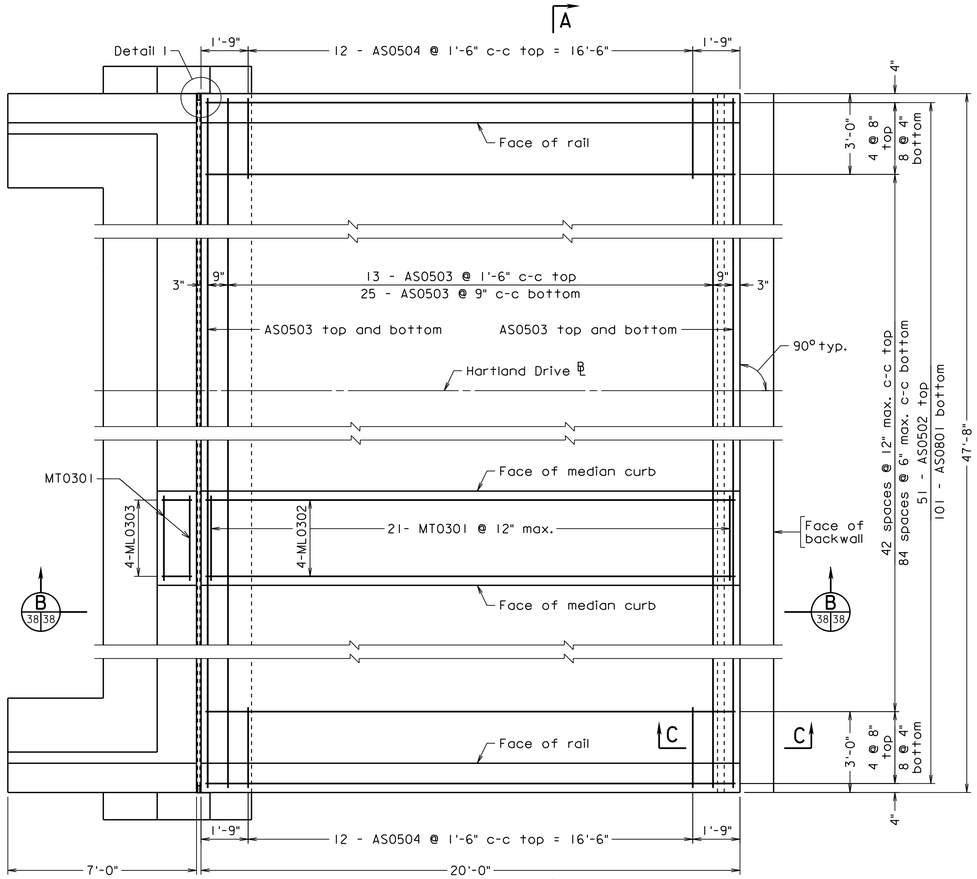

PLAN
Scale: 3/8" = 1'-0"

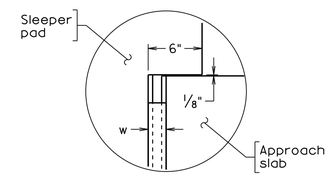

DETAIL 1
Scale: 1 1/2" = 1'-0"

Notes:

All joints that are to be sealed shall be free of cracked and spalled areas and their faces shall be free of all foreign matter, curing compound, oils, greases and dirt. All faces must be sandblasted or brushed with a mechanical rotary wire brush. Just prior to sealing, the joint shall be blown out with oil-free compressed air.

Deformed reinforcing bars shall conform to ASTM A615, Grade 60. All reinforcing bar dimensions except for bending diagram are to centers of bars.

Prime aggregate base material with 0.35 gal. per sq. yd. Liquid Asphalt Material Type RC-70, RC-250 or MC-250 if aggregate base is exposed for more than two weeks.

Grooving shall be in accordance with VDOT Road and Bridge Specifications, Section 404.07 (f), Class 6, Bridge Deck Finish. Payment for grooving is included in bridge deck grooving quantities.

For sleeper pad reinforcement, see sheet 40.

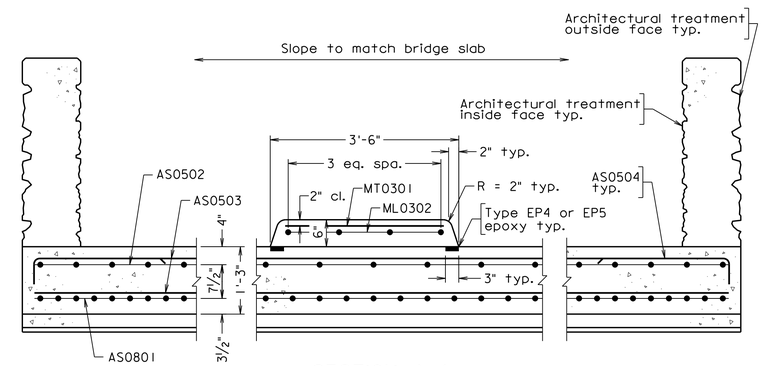

SECTION A-A
Scale: 3/4" = 1'-0"

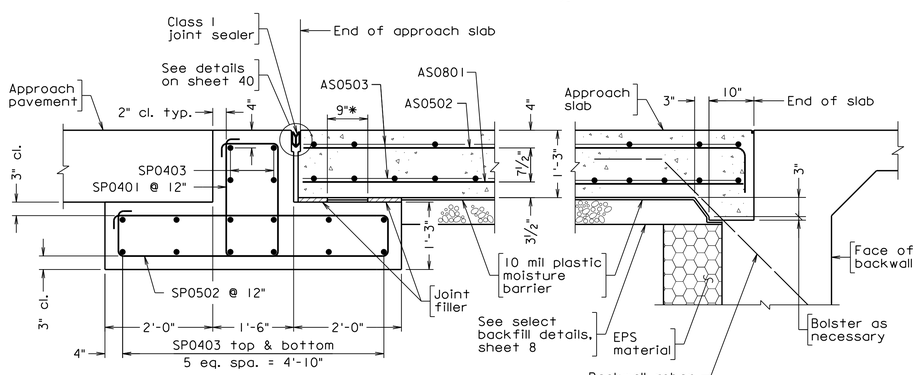

SECTION B 38 / 38,40
Scale: 3/4" = 1'-0"

* Two 1/8" preformed bedding material pads conforming to Section 237 of VDOT Road and Bridge Specifications, full length of approach slab seat. Between the pads use either a powdered graphite lubricant or Molykote 321 by Dow Corning or Mantek Dri-Guard.

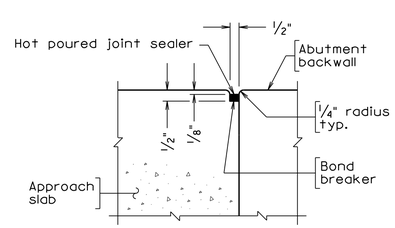

SECTION C-C
Scale: 3" = 1'-0"

REINFORCING STEEL SCHEDULE

Mark	No.	Size	Pin ø	Length	Location
AS0801	101	#8	——	19'-8"	Bottom longitudinal
AS0502	51	#5	——	20'-5"	Top longitudinal
AS0503	84	#5	——	24'-8"	Top and bottom transverse
AS0504	24	#5	3 3/4"	4'-0"	Top transverse at barriers
MT0301	23	#3	——	2'-11"	Median transverse
ML0302	4	#3	——	19'-8"	Median longitudinal approach
ML0303	4	#3	——	1'-2"	Median longitudinal sleeper pad
SP0401	60	#4	2"	6'-8"	Sleeper pad top stirrup
SP0502	50	#5	2 1/2"	12'-3"	Sleeper pad bottom stirrup
SP0403	32	#4	——	25'-6"	Sleeper pad transverse
SP0504	8	#5	——	8'-3"	Sleeper pad bottom stirrup
SP0405	24	#5	——	5'-6"	Sleeper pad longitudinal
SP0406	4	#5	2"	7'-8"	Sleeper pad top stirrup at ends

ESTIMATED QUANTITIES

	Concrete Class A4 Bridge Approach Slab ⊗ CY	Reinforcing Steel Bridge Approach Slab ⊗ LB
Abutment A	45.2	8,710
Sleeper Pad A	17.0	1,640
Total	62.2	10,350

⊗ Denotes items to be paid for on basis of plan quantities in accordance with current Road and Bridge Specifications.

PRELIMINARY PLANS

THESE PLANS NOT TO BE USED FOR CONSTRUCTION

Scale as noted

Dewberry

Dewberry Engineers Inc.
8401 ARLINGTON BLVD.
FAIRFAX, VA 22031
PHONE: 703.849.0100
FAX: 703.849.0518

HARTLAND DRIVE OVER BROAD RUN
LOUDOUN COUNTY
CPAP-2020-0009

SEAL

DEWBERRY ENGINEERS INC.
FAIRFAX, VA
STRUCTURAL ENGINEER

No.	DATE	BY	Description

REVISIONS

DESIGNED BY KLM
DRAWN BY KLM
CHECKED BY GJM
DATE APRIL 2020

TITLE

ABUTMENT A APPROACH SLAB

PROJECT NO. 50113885

XXX-XX

Received by VMRC September 1, 2020 /blh

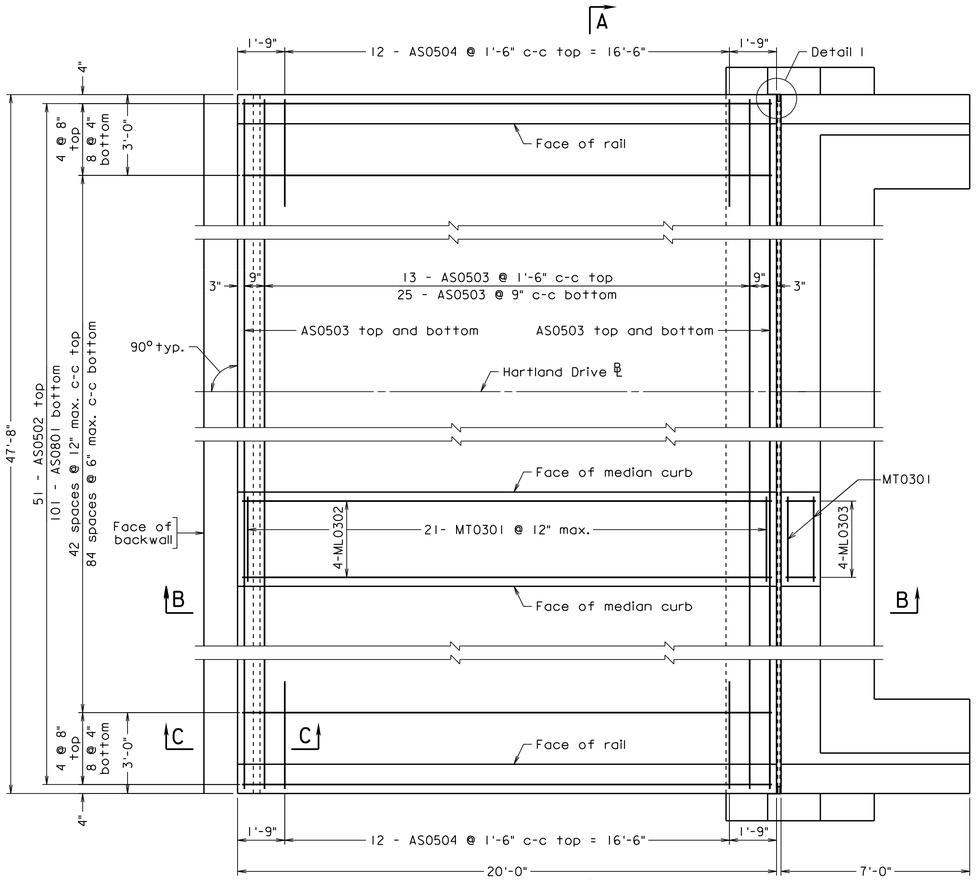

PLAN
Scale: 3/8" = 1'-0"

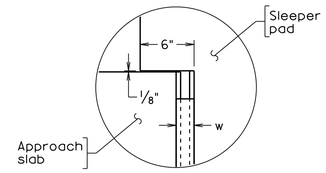

DETAIL 1
Scale: 1 1/2" = 1'-0"

Notes:

All joints that are to be sealed shall be free of cracked and spalled areas and their faces shall be free of all foreign matter, curing compound, oils, greases and dirt. All faces must be sandblasted or brushed with a mechanical rotary wire brush. Just prior to sealing, the joint shall be blown out with oil-free compressed air.

Deformed reinforcing bars shall conform to ASTM A615, Grade 60. All reinforcing bar dimensions except for bending diagram are to centers of bars.

Prime aggregate base material with 0.35 gal. per sq. yd. Liquid Asphalt Material Type RC-70, RC-250 or MC-250 if aggregate base is exposed for more than two weeks.

Grooving shall be in accordance with VDOT Road and Bridge Specifications, Section 404.07 (f), Class 6, Bridge Deck Finish. Payment for grooving is included in bridge deck grooving quantities.

For sleeper pad reinforcement, see sheet 40.

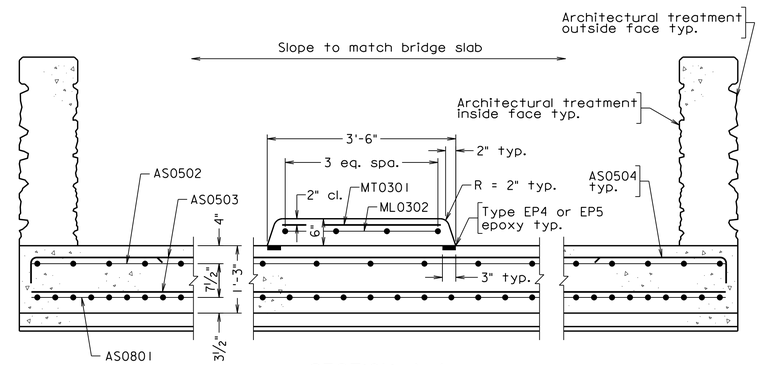

SECTION A-A
Scale: 3/4" = 1'-0"

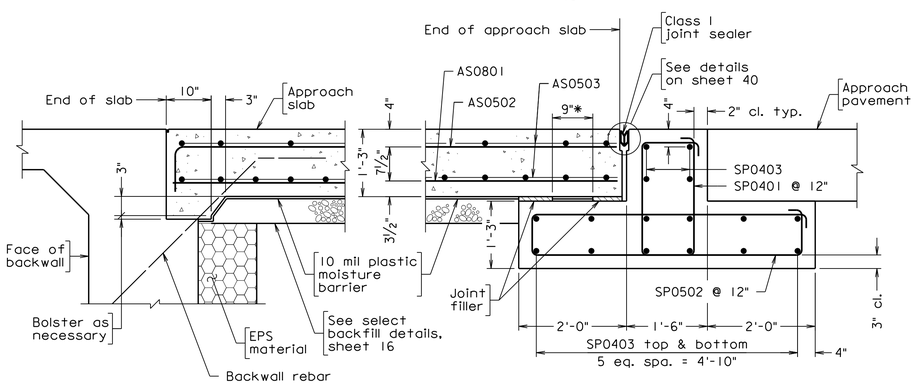

SECTION B-B
Scale: 3/4" = 1'-0"

* Two 1/8" preformed bedding material pads conforming to Section 237 of VDOT Road and Bridge Specifications, full length of approach slab seat. Between the pads use either a powdered graphite lubricant or Molykote 321 by Dow Corning or Mantek Dri-Guard.

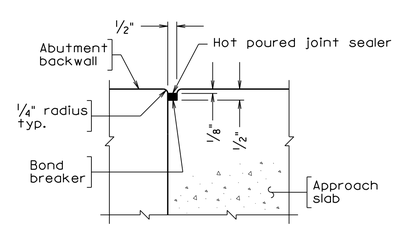

SECTION C-C
Scale: 3" = 1'-0"

REINFORCING STEEL SCHEDULE

Mark	No.	Size	Pin ø	Length	Location
AS0801	101	#8	——	19'-8"	Bottom longitudinal
AS0502	51	#5	——	20'-5"	Top longitudinal
AS0503	84	#5	——	24'-8"	Top and bottom transverse
AS0504	24	#5	3 3/4"	4'-0"	Top transverse at barriers
MT0301	23	#3	——	2'-11"	Median transverse
ML0302	4	#3	——	19'-8"	Median longitudinal approach
ML0303	4	#3	——	1'-2"	Median longitudinal sleeper pad
SP0401	60	#4	2"	6'-8"	Sleeper pad top stirrup
SP0502	50	#5	2 1/2"	12'-3"	Sleeper pad bottom stirrup
SP0403	32	#4	——	25'-6"	Sleeper pad transverse
SP0504	8	#5	——	8'-3"	Sleeper pad bottom stirrup
SP0405	24	#5	——	5'-6"	Sleeper pad longitudinal
SP0406	4	#5	2"	7'-8"	Sleeper pad top stirrup at ends

ESTIMATED QUANTITIES

	Concrete Class A4 Bridge Approach Slab ⊗ CY	Reinforcing Steel Bridge Approach Slab ⊗ LB
Abutment B	45.2	8,710
Sleeper Pad B	17.0	1,640
Total	62.2	10,350

⊗ Denotes items to be paid for on basis of plan quantities in accordance with current Road and Bridge Specifications.

PRELIMINARY PLANS
THESE PLANS NOT TO BE USED FOR CONSTRUCTION

Scale as noted

039

Dewberry

Dewberry Engineers Inc.
8401 ARLINGTON BLVD.
FAIRFAX, VA 22031
PHONE: 703.849.0100
FAX: 703.849.0518

HARTLAND DRIVE OVER BROAD RUN
LOUDOUN COUNTY
CPAP-2020-0009

SEAL

DEWBERRY ENGINEERS INC.
FAIRFAX, VA
STRUCTURAL ENGINEER

No.	DATE	BY	Description

REVISIONS

DESIGNED BY KLM
DRAWN BY KLM
CHECKED BY GJM
DATE APRIL 2020

TITLE

ABUTMENT B APPROACH SLAB

PROJECT NO. 50113885

XXX-XX

SHEET NO. 39 of 49

Received by VMRC September 1, 2020 /blh

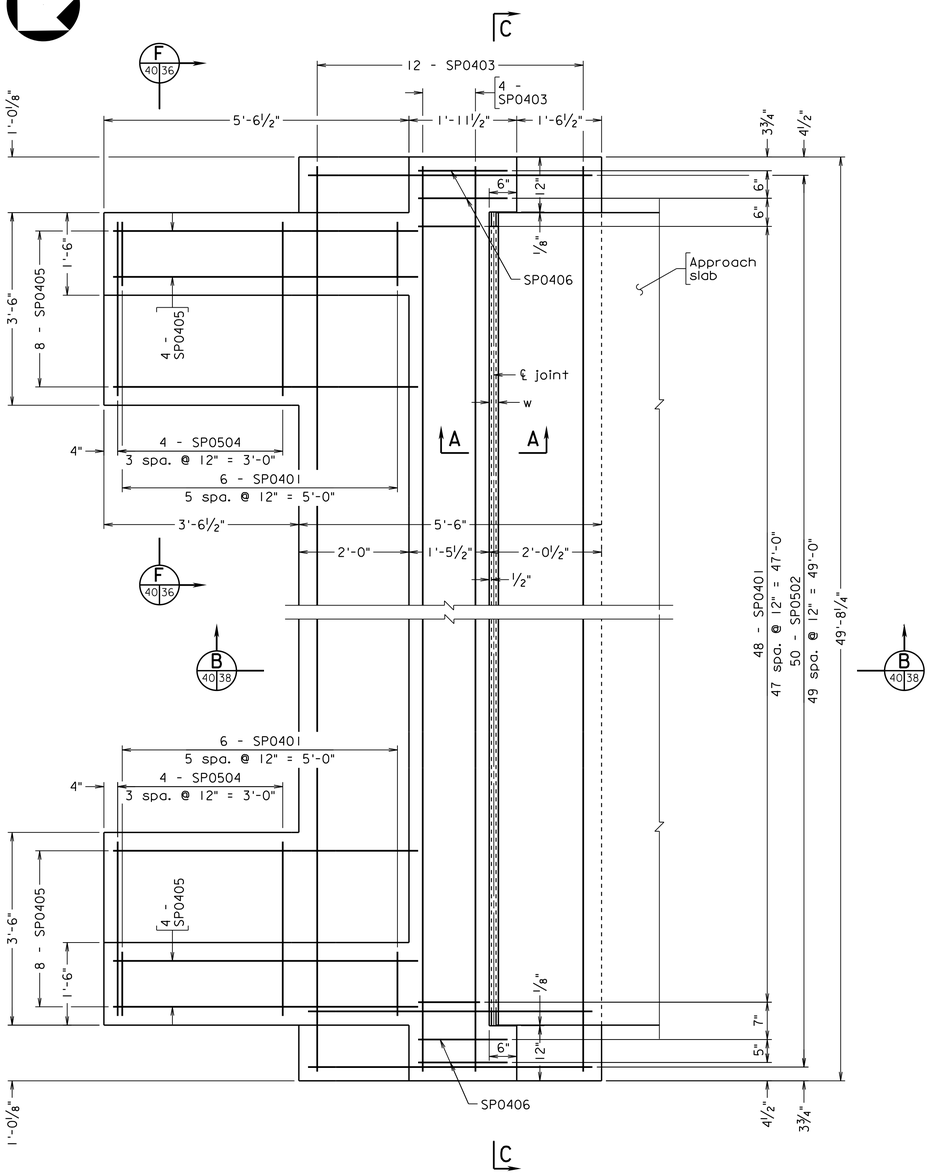

PLAN

Abutment A shown, Abutment B similar
Face of curb not shown for clarity
Scale: ¾" = 1'-0"

Notes:

Sealer shall be installed in one continuous piece except for median and barrier areas.

Joint width 'w' is the final joint width of the cured concrete when placed at 60°F. The width 'w' shall be increased or decreased for every 10°F temperature drop or rise respectively by t.

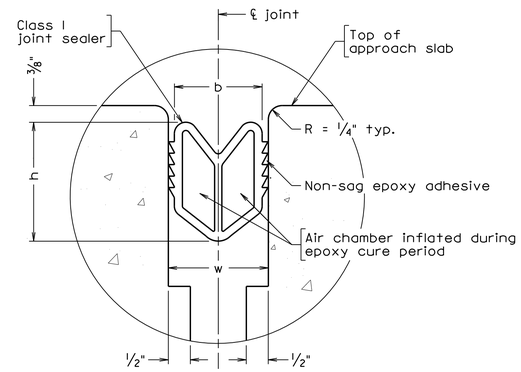

SECTION A-A

Not to scale

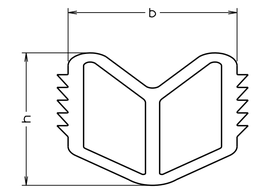

CLASS I JOINT SEALER

In uncompressed state
Not to scale

Abutment	Sealer Size b	Sealer Depth h	Joint Width w	t
A	2½"	3⅜"	2"	3/32 "
B	2½"	3⅜"	2"	3/32 "

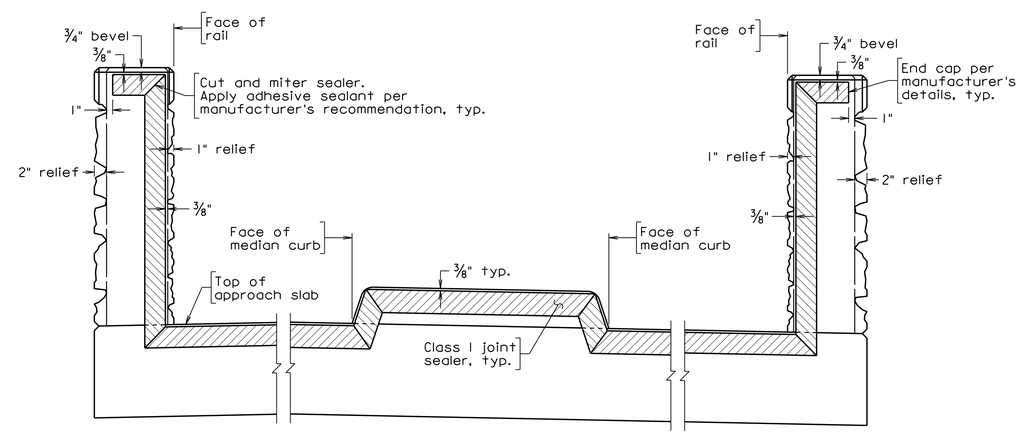

SECTION C-C

PRELIMINARY PLANS

THESE PLANS NOT TO BE USED FOR CONSTRUCTION

Scale: 1" = 1'-0" unless otherwise noted

Dewberry

Dewberry Engineers Inc.
8401 ARLINGTON BLVD.
FAIRFAX, VA 22031
PHONE: 703.849.0100
FAX: 703.849.0518

HARTLAND DRIVE OVER BROAD RUN
LOUDOUN COUNTY
CPAP-2020-0009

SEAL

DEWBERRY ENGINEERS INC.
FAIRFAX, VA
STRUCTURAL ENGINEER

No.	DATE	BY	Description

REVISIONS

DESIGNED BY KLM
DRAWN BY KLM
CHECKED BY GJM
DATE APRIL 2020

TITLE

SLEEPER PAD AND JOINT DETAILS

PROJECT NO. 50113885

XXX-XX

SHEET NO. 40 of 49

Received by VMRC September 1, 2020 /blh

www.geotechnical-solutions.com

PROJECT: Hartland Drive Bridges — PROJECT NO.: GP-192603-A
CLIENT: Timber Ridge at Hartland, LLC — BORING NO.: NB-1
PROJECT LOCATION: Loudoun County, VA
LOCATION: North Bridge - North Abutment — ELEVATION: 296.02 FT. MSL
DRILLER: Recon Drilling, Inc. (C. Gudiel) — LOGGED BY: J. Kline
DRILLING METHOD: 3.25" I.D. HSA w/Autohammer & NQ Core Bit — DATE: 11/15/2019
DEPTH TO - WATER> INITIAL: ▽ 4 ft. AFTER 24 HOURS: ▼ 4 ft. CAVING> C 5
GRID COORDINATES: N 7036926.61 E 11746812.38

① This information pertains only to this boring and should not be interpreted as being indicative of the site.

Depth/Elevation (Feet)	Graphic	Description	USCS Class.	Sample No.	Blow Counts	Recovery (in.)	Moisture Content (%)	Liquid Limit	Plasticity Index	%#200
0 / 294		2 inches of TOPSOIL (0.16)	TOPS							
		Alluvium - Brown SANDY LEAN CLAY, medium stiff, moist	CL	S1	2 3 3 3	21	23.1			
3		Residual - Red-brown SANDY LEAN CLAY, contains siltstone fragments, hard, moist	CL	Bulk S2	4 9 30 41	60 / 24	13.7 / 13.0	36	17	66.8
				S3	28 50/3"	8	11.4			
4.5 / 291		IGM - Highly weathered, moderately hard, medium bedded red-brown SILTSTONE	IGM							
5.8			ROCK							
6 / 288		Slightly weathered, moderately hard, thin-bedded reddish brown argillaceous, indurated, cross-bedded and interbedded SILTSTONE and SANDSTONE, highly to intensely fractured, slightly rough, with <0.2 in. separation, hard wall rock, continuous at moderate to high angle, highly to intensely jointed, slightly rough with <0.2 in. separation, hard wall rock, continuous at low to moderate angle		R1		47				
9 / 285		Core Run Length - 5 feet Recovery = 77.55% RQD = 34.8 = Poor Quality								
12 / 282		Slightly weathered, moderately hard, thin-bedded reddish brown argillaceous, indurated, cross-bedded and interbedded SILTSTONE and SANDSTONE, highly to intensely fractured, slightly rough, with <0.2 in. separation, hard wall rock, continuous at moderate to high angle, highly jointed, slightly rough with no separation, hard wall rock, continuous at low to moderate angle		R2		60				
15 / 279				R3		59				
18 / 276										

Water Content - ⊗ Penetration - ● (10 20 30 40 50)

Boring backfilled after 24 hour water level observation.

Figure PAGE 1 of 2

www.geotechnical-solutions.com

PROJECT: Hartland Drive Bridges — PROJECT NO.: GP-192603-A
CLIENT: Timber Ridge at Hartland, LLC — BORING NO.: NB-1
PROJECT LOCATION: Loudoun County, VA
LOCATION: North Bridge - North Abutment — ELEVATION: 296.02 FT. MSL
DRILLER: Recon Drilling, Inc. (C. Gudiel) — LOGGED BY: J. Kline
DRILLING METHOD: 3.25" I.D. HSA w/Autohammer & NQ Core Bit — DATE: 11/15/2019
DEPTH TO - WATER> INITIAL: ▽ 4 ft. AFTER 24 HOURS: ▼ 4 ft. CAVING> C 5
GRID COORDINATES: N 7036926.61 E 11746812.38

② This information pertains only to this boring and should not be interpreted as being indicative of the site.

Depth/Elevation (Feet)	Graphic	Description	USCS Class.	Sample No.	Blow Counts	Recovery (in.)	Moisture Content (%)	Liquid Limit	Plasticity Index	%#200
21		Core Run Length - 5 feet Recovery = 96.7% RQD = 95.6 = Excellent Quality								
24 / 273		Slightly weathered, moderately hard, thin-bedded reddish brown argillaceous, indurated and interbedded SILTSTONE and SANDSTONE, highly to intensely fractured, slightly rough, with <0.05 in. separation, hard wall rock, continuous at moderate to high angle, highly to intensely jointed, slightly rough with no separation, hard wall rock, continuous at low to moderate angle		R4		60				
27 / 270		Core Run Length - 5 feet Recovery = 95.8% RQD = 91.5 = Excellent Quality								
30 / 267		Slightly weathered, moderately hard, thin-bedded reddish brown argillaceous, indurated, cross-bedded and interbedded SILTSTONE and SANDSTONE, highly fractured, slightly rough, with <0.05 in. separation, hard wall rock, continuous at moderate to high angle, highly jointed, slightly rough with no separation, hard wall rock, continuous at low to moderate angle								
33 / 264		Core Run Length - 5 feet Recovery = 100.0% RQD = 90.0 = Excellent Quality								
36 / 261		Auger refusal at 5.8 feet. Rock core terminated at 25.8 feet.								
39 / 258										

Water Content - ⊗ Penetration - ● (10 20 30 40 50)

Boring backfilled after 24 hour water level observation.

Figure PAGE 2 of 2

www.geotechnical-solutions.com

PROJECT: Hartland Drive Bridges — PROJECT NO.: GP-192603-A
CLIENT: Timber Ridge at Hartland, LLC — BORING NO.: NB-2
PROJECT LOCATION: Loudoun County, VA
LOCATION: North Bridge - Central Pier — ELEVATION: 293.67 FT. MSL
DRILLER: Recon Drilling, Inc. (C. Gudiel) — LOGGED BY: J. Kline
DRILLING METHOD: 3.25" I.D. HSA w/Autohammer & NQ Core Bit — DATE: 11/13/2019
DEPTH TO - WATER> INITIAL: ▽ 3 ft. AFTER 24 HOURS: ▼ 4 ft. CAVING> C 8
GRID COORDINATES: N 7036854.80 E 11746739.12

③ ④ This information pertains only to this boring and should not be interpreted as being indicative of the site.

Depth/Elevation (Feet)	Graphic	Description	USCS Class.	Sample No.	Blow Counts	Recovery (in.)	Moisture Content (%)	Liquid Limit	Plasticity Index	%#200
0 / 291		1 inch of TOPSOIL (0.08)	TOPS							
		Alluvium - Brown SANDY LEAN CLAY, medium stiff, moist	CL	S1	3 4 4 4	24	27.5			
3		--- soft		Bulk S2	2 2 3 4	60 / 24	22.7 / 28.2	35	16	68.6
		Residual - Red-brown SANDY LEAN CLAY, contains siltstone fragments, medium stiff, moist	CL	S3	4 4 6 5	24	22.6	45	25	63.9
6				S4	10 16 50/3"	2	23.9			
7.0		IGM - Highly weathered, moderately hard, medium bedded red-brown SILTSTONE	IGM	S5	50/1"	1	1.6			
9.0			ROCK							
9 / 285		Slightly weathered, moderately hard, thin-bedded reddish brown argillaceous indurated, cross-bedded and interbedded SILTSTONE and SANDSTONE, highly to intensely fractured, slightly rough, with >0.2 in. separation, hard wall rock, continuous at moderate to high angle, highly to intensely jointed, slightly rough with <0.2 in. separation, hard wall rock, continuous at low to moderate angle		R1		31				
12 / 282		Mud seam from 9.2 to 11.3 feet								
15 / 279		Core Run Length - 5 feet Recovery = 48.3% RQD = 37.1 = Poor Quality		R2		60				
18 / 276		Slightly weathered, moderately hard, thin-bedded reddish brown argillaceous indurated, cross-bedded and interbedded SILTSTONE and								

Water Content - ⊗ Penetration - ● (10 20 30 40 50)

Boring backfilled after 24 hour water level observation.

Figure PAGE 1 of 3

The subsurface information shown on the boring logs in these plans was obtained with reasonable care and recorded in good faith solely for use by the Department in establishing design controls for the project. The Department has no reason to suspect that such information is not reasonably accurate as an approximate indication of the subsurface conditions at the sites where the borings were taken. The Department does not in any way warrant or guarantee that such data can be projected as indicative of conditions beyond the limits of the borings shown; and any such projections by bidders are purely interpretive and altogether speculative. Further, the Department does not in any way guarantee, either expressly or by implication, the sufficiency of the information for bid purposes.

The boring logs are made available to bidders in order that they may have access to subsurface data identical to that which is possessed by the Department, and are not intended as a substitute for personal investigation, interpretation and judgment by the bidders.

① Abutment A bottom of footing elevation, 293.50
② Abutment A estimated pile tip elevation, 275.00
③ Pier bottom of footing elevation, 287.50
④ Pier Footing 3 estimated pile tip elevation, 274.50

PRELIMINARY PLANS
THESE PLANS NOT TO BE USED FOR CONSTRUCTION

Dewberry

Dewberry Engineers Inc.
8401 ARLINGTON BLVD.
FAIRFAX, VA 22031
PHONE: 703.849.0100
FAX: 703.849.0518

HARTLAND DRIVE OVER BROAD RUN
LOUDOUN COUNTY
CPAP-2020-0009

SEAL

A copy of the original signed geotechnical submittal is on file in the District Office.

No.	DATE	BY	Description

REVISIONS

DESIGNED BY TPV
DRAWN BY JPD
CHECKED BY PCA
DATE APRIL 2020

TITLE

ENGINEERING GEOLOGY - 1

PROJECT NO. 50113885

XXX-XX

SHEET NO. 41 of 49

Received by VMRC September 1, 2020 /blh

www.geotechnical-solutions.com

PROJECT: Hartland Drive Bridges — PROJECT NO.: GP-192603-A
CLIENT: Timber Ridge at Hartland, LLC — BORING NO.: NB-2
PROJECT LOCATION: Loudoun County, VA
LOCATION: North Bridge - Central Pier — ELEVATION: 293.67 ft. MSL
DRILLER: Recon Drilling, Inc. (C. Gudiel) — LOGGED BY: J. Kline
DRILLING METHOD: 3.25" I.D. HSA w/Autohammer & NQ Core Bit — DATE: 11/13/2019
DEPTH TO - WATER> INITIAL: ▽ 3 ft. AFTER 24 HOURS: ▼ 4 ft. CAVING> C 8
GRID COORDINATES: N 7036854.80 E 11746739.12

This information pertains only to this boring and should not be interpreted as being indicative of the site.

Depth/Elevation (Feet)	Graphic	Description	USCS Class.	Sample No.	Blow Counts	Recovery (in.)	Moisture Content (%)	Liquid Limit	Plasticity Index	%#200	PI — LL; Water Content - ⊗; Penetration - ● (10 20 30 40 50)
21 / 273		SANDSTONE, highly to intensely fractured, slightly rough, with <0.2 in. separation, hard wall rock, continuous at moderate to high angle, highly jointed, slightly rough with no separation, hard wall rock, continuous at low to moderate angle		R3		60					
24 / 270		, Core Run Length - 5 feet Recovery = 100.0% RQD = 90.8 = Excellent Quality									
27 / 267		Slightly weathered, moderately hard, thin-bedded reddish brown argillaceous and indurated SILTSTONE, moderately to highly fractured, slightly rough, with <0.05 in. separation, hard wall rock, continuous at moderate to high angle, highly jointed, slightly rough with no separation, hard wall rock, continuous at low to moderate angle		R4		60					
30 / 264		Core Run Length - 5 feet Recovery = 100.0% RQD = 93.75 = Excellent Quality									
33 / 261		Slightly weathered, moderately hard, thin-bedded reddish brown argillaceous and indurated SILTSTONE, highly fractured, slightly rough, with <0.05 in. separation, hard wall rock, continuous at moderate to high angle, highly jointed, slightly rough with no separation, hard wall rock, continuous at low to moderate angle									
36 / 258		Core Run Length - 5 feet Recovery = 100.0% RQD = 93.5 = Excellent Quality									
39 / 255											

Boring backfilled after 24 hour water level observation.

Figure PAGE 2 of 3

www.geotechnical-solutions.com

PROJECT: Hartland Drive Bridges — PROJECT NO.: GP-192603-A
CLIENT: Timber Ridge at Hartland, LLC — BORING NO.: NB-2
PROJECT LOCATION: Loudoun County, VA
LOCATION: North Bridge - Central Pier — ELEVATION: 293.67 ft. MSL
DRILLER: Recon Drilling, Inc. (C. Gudiel) — LOGGED BY: J. Kline
DRILLING METHOD: 3.25" I.D. HSA w/Autohammer & NQ Core Bit — DATE: 11/13/2019
DEPTH TO - WATER> INITIAL: ▽ 3 ft. AFTER 24 HOURS: ▼ 4 ft. CAVING> C 8
GRID COORDINATES: N 7036854.80 E 11746739.12

This information pertains only to this boring and should not be interpreted as being indicative of the site.

Depth/Elevation (Feet)	Graphic	Description	USCS Class.	Sample No.	Blow Counts	Recovery (in.)	Moisture Content (%)	Liquid Limit	Plasticity Index	%#200	PI — LL; Water Content - ⊗; Penetration - ● (10 20 30 40 50)
42 / 252		Auger refusal at 9 feet. Rock core terminated at 29 feet.									
45 / 249											
48 / 246											
51 / 243											
54 / 240											
57 / 237											
60 / 234											

Boring backfilled after 24 hour water level observation.

Figure PAGE 3 of 3

www.geotechnical-solutions.com

PROJECT: Hartland Drive Bridges — PROJECT NO.: GP-192603-A
CLIENT: Timber Ridge at Hartland, LLC — BORING NO.: NB-3
PROJECT LOCATION: Loudoun County, VA
LOCATION: North Bridge - South Abutment — ELEVATION: 292.48 ft. MSL
DRILLER: Recon Drilling, Inc. (C. Gudiel) — LOGGED BY: J. Kline
DRILLING METHOD: 3.25" I.D. HSA w/Autohammer & NQ Core Bit — DATE: 11/14/2019
DEPTH TO - WATER> INITIAL: ▽ 3 ft. AFTER 24 HOURS: ▼ 3 ft. CAVING> C 8
GRID COORDINATES: N 7036783.60 E 11746665.47

This information pertains only to this boring and should not be interpreted as being indicative of the site.

Depth/Elevation (Feet)	Graphic	Description	USCS Class.	Sample No.	Blow Counts	Recovery (in.)	Moisture Content (%)	Liquid Limit	Plasticity Index	%#200	PI — LL; Water Content - ⊗; Penetration - ● (10 20 30 40 50)
0 / 291		2 inches of TOPSOIL (0.16)	TOPS.								
		Alluvium - Brown SANDY LEAN CLAY, very soft, moist	CL	S1	2 1 1	6	30.3				
3 / 288				S2	1 1 1	18	29.6				
		Residual - Red-brown SANDY LEAN CLAY, contains siltstone fragments, medium stiff, moist	CL	S3	1 2 6	24	15.8				
6 / 285		(6.5) IGM - Highly weathered, moderately hard, medium bedded red-brown SILTSTONE	IGM	S4	24 50/1"	6	14.5				
		(8.0) Slightly weathered, moderately hard, thin-bedded reddish brown argillaceous indurated, cross-bedded and interbedded SILTSTONE and SANDSTONE, highly to intensely fractured, slightly rough, with <0.05 in. separation, hard wall rock, continuous at moderate to high angle, highly to intensely jointed, slightly rough with no separation, hard wall rock, continuous at low to moderate angle	ROCK	S5	50/0"	NR					
9 / 282		Mud seam from 10.45 to 11.6 feet		R1		48					
12 / 279		Core Run Length - 5 feet Recovery = 73.3% RQD = 35.0 = Poor Quality									
15 / 276		Slightly weathered, moderately hard, thin-bedded reddish brown argillaceous indurated and interbedded SILTSTONE and SANDSTONE, highly to intensely fractured, slightly rough, with <0.05 in. separation, hard wall		R2		60					
18 / 273											

Boring backfilled after 24 hour water level observation.

Figure PAGE 1 of 2

The subsurface information shown on the boring logs in these plans was obtained with reasonable care and recorded in good faith solely for use by the Department in establishing design controls for the project. The Department has no reason to suspect that such information is not reasonably accurate as an approximate indication of the subsurface conditions at the sites where the borings were taken. The Department does not in any way warrant or guarantee that such data can be projected as indicative of conditions beyond the limits of the borings shown; and any such projections by bidders are purely interpretive and altogether speculative. Further, the Department does not in any way guarantee, either expressly or by implication, the sufficiency of the information for bid purposes.

The boring logs are made available to bidders in order that they may have access to subsurface data identical to that which is possessed by the Department, and are not intended as a substitute for personal investigation, interpretation and judgment by the bidders.

① Abutment B bottom of footing elevation, 290.75

② Abutment B estimated pile tip elevation, 275.75

PRELIMINARY PLANS

THESE PLANS NOT TO BE USED FOR CONSTRUCTION

042

Dewberry

Dewberry Engineers Inc.
8401 ARLINGTON BLVD.
FAIRFAX, VA 22031
PHONE: 703.849.0100
FAX: 703.849.0518

HARTLAND DRIVE OVER BROAD RUN
LOUDOUN COUNTY
CPAP-2020-0009

SEAL

A copy of the original signed geotechnical submittal is on file in the District Office.

No.	DATE	BY	Description

REVISIONS

DESIGNED BY TPV
DRAWN BY JPD
CHECKED BY PCA
DATE APRIL 2020

TITLE

ENGINEERING GEOLOGY - 2

PROJECT NO. 50113885

XXX-XX

SHEET NO. 42 of 49

Received by VMRC September 1, 2020 /blh

www.geotechnical-solutions.com

PROJECT: Hartland Drive Bridges — PROJECT NO.: GP-192603-A
CLIENT: Timber Ridge at Hartland, LLC — BORING NO.: NB-3
PROJECT LOCATION: Loudoun County, VA
LOCATION: North Bridge - South Abutment — ELEVATION: 292.48 ft. MSL
DRILLER: Recon Drilling, Inc. (C. Gudiel) — LOGGED BY: J. Kline
DRILLING METHOD: 3.25" I.D. HSA w/Autohammer & NQ Core Bit — DATE: 11/14/2019
DEPTH TO - WATER> INITIAL: ▽ 3 ft. AFTER 24 HOURS: ▼ 3 ft. CAVING> ℄ 8
GRID COORDINATES: N 7036783.60 E 11746665.47

This information pertains only to this boring and should not be interpreted as being indicative of the site.

Depth/Elevation (Feet)	Graphic	Description	USCS Class.	Sample No.	Blow Counts	Recovery (in.)	Moisture Content (%)	Liquid Limit	Plasticity Index	%#200	PI — LL; Water Content - ⊗; Penetration - ● (10 20 30 40 50)
21 / 270		rock, continuous at moderate to high angle, highly to intensely jointed, slightly rough with <0.2 in. separation, hard wall rock, continuous at low to moderate angle Core Run Length - 5 feet Recovery = 92.5% RQD = 73.75 = Fair Quality		R3		60					
24 / 267		Slightly weathered, moderately hard, thin-bedded reddish brown argillaceous and indurated SILTSTONE, highly to intensely fractured, slightly rough, with <0.05 in. separation, hard wall rock, continuous at moderate to high angle, highly to intensely jointed, slightly rough with <0.2 in. separation, hard wall rock, continuous at low to moderate angle Core Run Length - 5 feet Recovery = 98.3% RQD = 70.4 = Fair Quality		R4		60					
27 / 264		Slightly weathered, moderately hard, thin-bedded reddish brown argillaceous and indurated SILTSTONE, moderately to highly fractured, slightly rough, with <0.2 in. separation, hard wall rock, continuous at moderate to high angle, moderately to intensely jointed, slightly rough with <0.2 in. separation, hard wall rock, continuous at low to moderate angle Core Run Length - 5 feet Recovery = 98.3% RQD = 88.3 = Good Quality									
30 / 261											
33 / 258											
36 / 255											
39		Auger refusal at 8 feet. Rock core terminated at 28 feet.									

Boring backfilled after 24 hour water level observation.

Figure PAGE 2 of 2

www.geotechnical-solutions.com

PROJECT: Hartland Drive Bridges — PROJECT NO.: GP-192603-A
CLIENT: Timber Ridge at Hartland, LLC — BORING NO.: NB-4
PROJECT LOCATION: Loudoun County, VA
LOCATION: North Bridge - South Abutment — ELEVATION: 292.63 ft. MSL
DRILLER: Recon Drilling, Inc. (C. Gudiel) — LOGGED BY: J. Kline
DRILLING METHOD: 3.25" I.D. HSA w/Autohammer & NQ Core Bit — DATE: 11/15/2019
DEPTH TO - WATER> INITIAL: ▽ 3 ft. AFTER 24 HOURS: ▼ 3 ft. CAVING> ℄ 4.5
GRID COORDINATES: N 7036750.41 E 11746697.85

This information pertains only to this boring and should not be interpreted as being indicative of the site.

Depth/Elevation (Feet)	Graphic	Description	USCS Class.	Sample No.	Blow Counts	Recovery (in.)	Moisture Content (%)	Liquid Limit	Plasticity Index	%#200	PI — LL; Water Content - ⊗; Penetration - ● (10 20 30 40 50)
0 / 291		2 inches of TOPSOIL (0.16)	TOPS								
		Alluvium - Brown SANDY LEAN CLAY, very soft, moist	CL	S1	1 / 1 / 1		8	20.2	32	10	64.6
3 / 288				S2	2 / 2 / 2		8	28.7			
		Residual - Red-brown SANDY LEAN CLAY, contains siltstone fragments, medium stiff, moist (6.0)	CL	S3	3 / 4 / 20		24	23.3			
6 / 285		IGM - Highly weathered, moderately hard, medium bedded red-brown SILTSTONE	IGM	S4	50/6"		6	19.2			
		(8.5)		S5	50/1"		1	7.3			
9 / 282		Slightly weathered, moderately hard, thin-bedded reddish brown argillaceous indurated, cross-bedded and interbedded SILTSTONE and SANDSTONE, highly to intensely fractured, slightly rough, with <0.2 in. separation, hard wall rock, continuous at moderate to high angle, highly to intensely jointed, slightly rough with <0.2 in. separation, hard wall rock, continuous at low to moderate angle Core Run Length - 5 feet Recovery = 91.7% RQD = 59.8 = Fair Quality	ROCK	R1		58					
12 / 279											
15 / 276				R2		58					
18 / 273		Slightly weathered, moderately hard, thin-bedded reddish brown argillaceous indurated, cross-bedded and interbedded SILTSTONE and SANDSTONE, highly fractured, slightly rough, with <0.2 in. separation, hard wall rock, continuous at moderate to									

Boring backfilled after 24 hour water level observation.

Figure PAGE 1 of 2

www.geotechnical-solutions.com

PROJECT: Hartland Drive Bridges — PROJECT NO.: GP-192603-A
CLIENT: Timber Ridge at Hartland, LLC — BORING NO.: NB-4
PROJECT LOCATION: Loudoun County, VA
LOCATION: North Bridge - South Abutment — ELEVATION: 292.63 ft. MSL
DRILLER: Recon Drilling, Inc. (C. Gudiel) — LOGGED BY: J. Kline
DRILLING METHOD: 3.25" I.D. HSA w/Autohammer & NQ Core Bit — DATE: 11/15/2019
DEPTH TO - WATER> INITIAL: ▽ 3 ft. AFTER 24 HOURS: ▼ 3 ft. CAVING> ℄ 4.5
GRID COORDINATES: N 7036750.41 E 11746697.85

This information pertains only to this boring and should not be interpreted as being indicative of the site.

Depth/Elevation (Feet)	Graphic	Description	USCS Class.	Sample No.	Blow Counts	Recovery (in.)	Moisture Content (%)	Liquid Limit	Plasticity Index	%#200	PI — LL; Water Content - ⊗; Penetration - ● (10 20 30 40 50)
21 / 270		high angle, highly jointed, slightly rough with <0.2 in. separation, hard wall rock, continuous at low to moderate angle Core Run Length - 5 feet Recovery = 94.2% RQD = 86.25 = Good Quality		R3		60					
24 / 267		Slightly weathered, moderately hard, thin-bedded reddish brown argillaceous indurated, cross-bedded and interbedded SILTSTONE and SANDSTONE, highly fractured, slightly rough, with <0.05 in. separation, hard wall rock, continuous at moderate to high angle, highly jointed, slightly rough with no separation, hard wall rock, continuous at low to moderate angle Core Run Length - 5 feet Recovery = 98.3% RQD = 98.3 = Excellent Quality		R4		60					
27 / 264		Slightly weathered, moderately hard, thin-bedded reddish brown argillaceous indurated SILTSTONE, moderately to highly fractured, slightly rough, with no separation, hard wall rock, continuous at moderate to high angle, moderately to highly jointed, slightly rough with no separation, hard wall rock, continuous at low to moderate angle Core Run Length - 5 feet Recovery = 100.0% RQD = 100.0 = Excellent Quality									
30 / 261											
33 / 258											
36 / 255											
39		Auger refusal at 8.5 feet. Rock core terminated at 28.5 feet.									

Boring backfilled after 24 hour water level observation.

Figure PAGE 2 of 2

The subsurface information shown on the boring logs in these plans was obtained with reasonable care and recorded in good faith solely for use by the Department in establishing design controls for the project. The Department has no reason to suspect that such information is not reasonably accurate as an approximate indication of the subsurface conditions at the sites where the borings were taken. The Department does not in any way warrant or guarantee that such data can be projected as indicative of conditions beyond the limits of the borings shown; and any such projections by bidders are purely interpretive and altogether speculative. Further, the Department does not in any way guarantee, either expressly or by implication, the sufficiency of the information for bid purposes.

The boring logs are made available to bidders in order that they may have access to subsurface data identical to that which is possessed by the Department, and are not intended as a substitute for personal investigation, interpretation and judgment by the bidders.

① Abutment B bottom of footing elevation, 290.75

② Abutment B estimated pile tip elevation, 275.75

PRELIMINARY PLANS
THESE PLANS NOT TO BE USED FOR CONSTRUCTION

Dewberry

Dewberry Engineers Inc.
8401 ARLINGTON BLVD.
FAIRFAX, VA 22031
PHONE: 703.849.0100
FAX: 703.849.0518

HARTLAND DRIVE OVER BROAD RUN
LOUDOUN COUNTY
CPAP-2020-0009

SEAL

A copy of the original signed geotechnical submittal is on file in the District Office.

No.	DATE	BY	Description

REVISIONS

DESIGNED BY TPV
DRAWN BY JPD
CHECKED BY PCA
DATE APRIL 2020

TITLE

ENGINEERING GEOLOGY - 3

PROJECT NO. 50113885

XXX-XX

SHEET NO. 43 of 49

Received by VMRC September 1, 2020 /blh

www.geotechnical-solutions.com

PROJECT: Hartland Drive Bridges — PROJECT NO.: GP-192603-A
CLIENT: Timber Ridge at Hartland, LLC — BORING NO.: NB-5
PROJECT LOCATION: Loudoun County, VA
LOCATION: North Bridge - Upstream Stream Channel — ELEVATION: 293.32 ft.
DRILLER: Recon Drilling, Inc. (C. Gudiel) — LOGGED BY: J. Kline
DRILLING METHOD: 3.25" I.D. HSA w/Autohammer & NQ Core Bit — DATE: 11/14/2019
DEPTH TO - WATER> INITIAL: ▽ 0 ft. AFTER 24 HOURS: ▼ 0 ft. CAVING> C 3
GRID COORDINATES: N 7036887.44 E 11746757.09

This information pertains only to this boring and should not be interpreted as being indicative of the site.

Depth/Elevation (feet)	Graphic	Description	USCS Class.	Sample No.	Blow Counts	Recovery (in.)	Moisture Content (%)	Liquid Limit	Plasticity Index	%#200
0 / 293.32		Alluvium - Brown CLAYEY SAND WITH GRAVEL, loose, moist	SC	S1 Bulk	3 4 5	17 24	24.7 22.1	35	15	41.0
2.0 / 291		IGM - Highly weathered, moderately hard, medium bedded red-brown SILTSTONE	IGM ROCK	S2	50/1"	1	11.8			
3		Slightly weathered, moderately hard, thin-bedded grayish red argillaceous indurated, cross-bedded and interbedded SILTSTONE and SANDSTONE, moderately to highly fractured, slightly rough, with >0.2 in. separation, hard wall rock, continuous at moderate to high angle, moderately to highly jointed, slightly rough with no separation, hard wall rock, continuous at low to moderate angle		R1		53				
6 / 288		Mud seam from 5.3 to 5.8 feet								
9 / 285		Core Run Length - 5 feet Recovery = 88.3% RQD = 81.5 = Good Quality		R2		60				
12 / 282		Slightly weathered, moderately hard, thin-bedded reddish brown argillaceous indurated, cross-bedded and interbedded SILTSTONE and SANDSTONE, highly to intensely fractured, slightly rough, with <0.05 in. separation, hard wall rock, continuous at moderate to high angle, highly to intensely jointed, slightly rough with <0.2 in. separation, hard wall rock, continuous at low to moderate angle								
15 / 279		Core Run Length - 5 feet Recovery = 95.0% RQD = 78.3 = Good Quality								
18 / 276		Auger refusal at 2.1 feet. Rock core terminated at 12.1								

Water Content - ⊗ Penetration - ●
PI ⊢ LL
10 20 30 40 50
5 — 50/1"

Boring backfilled after 24 hour water level observation.

Figure PAGE 1 of 2

www.geotechnical-solutions.com

PROJECT: Hartland Drive Bridges — PROJECT NO.: GP-192603-A
CLIENT: Timber Ridge at Hartland, LLC — BORING NO.: NB-5
PROJECT LOCATION: Loudoun County, VA
LOCATION: North Bridge - Upstream Stream Channel — ELEVATION: 293.32 ft.
DRILLER: Recon Drilling, Inc. (C. Gudiel) — LOGGED BY: J. Kline
DRILLING METHOD: 3.25" I.D. HSA w/Autohammer & NQ Core Bit — DATE: 11/14/2019
DEPTH TO - WATER> INITIAL: ▽ 0 ft. AFTER 24 HOURS: ▼ 0 ft. CAVING> C 3
GRID COORDINATES: N 7036887.44 E 11746757.09

This information pertains only to this boring and should not be interpreted as being indicative of the site.

Depth/Elevation (feet)	Graphic	Description	USCS Class.	Sample No.	Blow Counts	Recovery (in.)	Moisture Content (%)	Liquid Limit	Plasticity Index	%#200
21 / 273		feet.								
24 / 270										
27 / 267										
30 / 264										
33 / 261										
36 / 258										
39 / 255										

Water Content - ⊗ Penetration - ●
PI ⊢ LL
10 20 30 40 50

Boring backfilled after 24 hour water level observation.

Figure PAGE 2 of 2

044

The subsurface information shown on the boring logs in these plans was obtained with reasonable care and recorded in good faith solely for use by the Department in establishing design controls for the project. The Department has no reason to suspect that such information is not reasonably accurate as an approximate indication of the subsurface conditions at the sites where the borings were taken. The Department does not in any way warrant or guarantee that such data can be projected as indicative of conditions beyond the limits of the borings shown; and any such projections by bidders are purely interpretive and altogether speculative. Further, the Department does not in any way guarantee, either expressly or by implication, the sufficiency of the information for bid purposes.

The boring logs are made available to bidders in order that they may have access to subsurface data identical to that which is possessed by the Department, and are not intended as a substitute for personal investigation, interpretation and judgment by the bidders.

PRELIMINARY PLANS
THESE PLANS NOT TO BE USED FOR CONSTRUCTION

Dewberry

Dewberry Engineers Inc.
8401 ARLINGTON BLVD.
FAIRFAX, VA 22031
PHONE: 703.849.0100
FAX: 703.849.0518

HARTLAND DRIVE OVER BROAD RUN
LOUDOUN COUNTY
CPAP-2020-0009

SEAL

A copy of the original signed geotechnical submittal is on file in the District Office.

No.	DATE	BY	Description

REVISIONS

DESIGNED BY TPV
DRAWN BY JPD
CHECKED BY PCA
DATE APRIL 2020

TITLE

ENGINEERING GEOLOGY - 4

PROJECT NO. 50113885

XXX-XX

SHEET NO. 44 of 49

Received by VMRC September 1, 2020 /blh

PROJECT: Hartland Drive Bridges — PROJECT NO.: GP-192603
CLIENT: Timber Ridge at Hartland, LLC — BORING NO.: BR-1
PROJECT LOCATION: Loudoun County, Virginia
LOCATION: Hartland Drive Station 74+50, CL — ELEVATION: 296.7 ft. MSL
DRILLER: Recon Drilling, Inc. (A. Espinoza) — LOGGED BY: J. Kline
DRILLING METHOD: 3.25" I.D. HSA w/Autohammer & NQ Core Bit (CME 550 — DATE: 05/20/2019
DEPTH TO WATER) INITIAL: ▽ 13.5 AFTER 24 HOURS: ▽ 5 ft. CAVING) ℄ 19 ft.

www.geotechnical-solutions.com

This information pertains only to this boring and should not be interpreted as being indicative of the site

① 045

Depth/Elevation (Feet)	Graphic	Description	USCS Class.	Sample No.	Blow Counts	Recovery (in.)	Moisture Content (%)	Liquid Limit	Plasticity Index	%#200
0		3 inches of TOPSOIL	TOPS							
0.25		Brown, moist, medium stiff sandy Lean CLAY	CL	S1	2 3 4 7	24	19.1			
2.0		Brown, moist, stiff Elastic SILT with sand	MH	S2	4 3 7 8	24				
4.5		Reddish brown, moist, very hard Weathered ROCK (Siltstone)	IGM	S3	15 50/4"	10				
				S4	50/4"	4				
				S5	50/1"	1				
				S6	7 8 10	18				
18.5		Slightly weathered, moderately hard, thin-bedded reddish brown indurated and interbedded, SILTSTONE and	ROCK	S7	50/0"	NR				

Elevations: 294, 291, 288, 285, 282, 279

Graph: PI — LL; Water Content - ⊗; Penetration - ●; 10 20 30 40 50; 12, 50/4", 50/4", 50/1", 18, 50/0"

Boring backfilled after 24-hour water observations.

PAGE 1 of 3

② 045

Depth/Elevation (Feet)	Graphic	Description	USCS Class.	Sample No.	Blow Counts	Recovery (in.)	Moisture Content (%)	Liquid Limit	Plasticity Index	%#200
21 (276)		SANDSTONE, highly fractured, slightly rough, with <0.2 in. separation, partially calcite-filled, hard wall rock, continuous at low to high angle, Core Run Length - 5 feet Recovery - 100% RQD = 98.3 = Excellent Quality		R1		60				
24 (273)		Slightly weathered, moderately hard, thin-bedded reddish brown indurated and interbedded, STONE, in and SANDSTONEtensely to highly fractured, slightly rough, with <0.2 in. separation, partially calcite-filled, hard wall rock, continuous at low to high angle, Core Run Length - 5 feet Recovery - 96.7100% RQD = 71.3 = Fair Quality		R2		60				
27 (270)		Slightly weathered, moderately hard, thin-bedded reddish brown indurated, argillaceous and vuggy, SILTSTONEE, highly fractured, slightly rough, with <0.2 in. separation, partially calcite-filled, hard wall rock, continuous at low to high angle, Core Run Length - 5 feet Recovery - 96.7% RQD = 73.3 = Fairt Quality		R3		60				
30 (267)		Slightly weathered, moderately hard, thin-bedded reddish brown and gray indurated and interbedded, SILTSTONE and SANDSTONE, intensely to highly fractured, slightly rough, with <0.2 in. separation, partially calcite-filled, hard wall rock, continuous at low to high angle, Core Run Length - 5 feet Recovery - 96.7% RQD = 70.4 = Fair Quality		R4		60				
33 (264)										
36 (261)										
39 (258)										

Elevations: 276, 273, 270, 267, 264, 261, 258

Graph: PI — LL; Water Content - ⊗; Penetration - ●; 10 20 30 40 50

Boring backfilled after 24-hour water observations.

PAGE 2 of 3

Depth/Elevation (Feet)	Graphic	Description	USCS Class.	Sample No.	Blow Counts	Recovery (in.)	Moisture Content (%)	Liquid Limit	Plasticity Index	%#200
42 (255)		Auger refusal at 18.5 feet, rock core terminated at 38.5 feet.								
45 (252)										
48 (249)										
51 (246)										
54 (243)										
57 (240)										
60 (237)										

Elevations: 255, 252, 249, 246, 243, 240, 237

Graph: PI — LL; Water Content - ⊗; Penetration - ●; 10 20 30 40 50

Boring backfilled after 24-hour water observations.

PAGE 3 of 3

The subsurface information shown on the boring logs in these plans was obtained with reasonable care and recorded in good faith solely for use by the Department in establishing design controls for the project. The Department has no reason to suspect that such information is not reasonably accurate as an approximate indication of the subsurface conditions at the sites where the borings were taken. The Department does not in any way warrant or guarantee that such data can be projected as indicative of conditions beyond the limits of the borings shown; and any such projections by bidders are purely interpretive and altogether speculative. Further, the Department does not in any way guarantee, either expressly or by implication, the sufficiency of the information for bid purposes.

The boring logs are made available to bidders in order that they may have access to subsurface data identical to that which is possessed by the Department, and are not intended as a substitute for personal investigation, interpretation and judgment by the bidders.

① Abutment A bottom of footing elevation, 293.50

② Abutment A estimated pile tip elevation, 275.00

PRELIMINARY PLANS

THESE PLANS NOT TO BE USED FOR CONSTRUCTION

Dewberry

Dewberry Engineers Inc.
8401 ARLINGTON BLVD.
FAIRFAX, VA 22031
PHONE: 703.849.0100
FAX: 703.849.0518

HARTLAND DRIVE OVER BROAD RUN
LOUDOUN COUNTY
CPAP-2020-0009

SEAL

A copy of the original signed geotechnical submittal is on file in the District Office.

No.	DATE	BY	Description

REVISIONS

DESIGNED BY TPV
DRAWN BY JPD
CHECKED BY PCA
DATE APRIL 2020

TITLE

ENGINEERING GEOLOGY - 5

PROJECT NO. 50113885

XXX-XX

SHEET NO. 45 of 49

Received by VMRC September 1, 2020 /blh

PROJECT: Hartland Drive Bridges — PROJECT NO.: GP-192603
CLIENT: Timber Ridge at Hartland, LLC — BORING NO.: BR-2
PROJECT LOCATION: Loudoun County, Virginia
LOCATION: Hartland Drive Station 75+58, CL — ELEVATION: 293.7 ft. MSL
DRILLER: Recon Drilling, Inc. (A. Espinoza) — LOGGED BY: J. Kline
DRILLING METHOD: 3.25" I.D. HSA w/Autohammer & NQ Core Bit (CME 550 — DATE: 05/15/2019
DEPTH TO WATER> INITIAL: ▽ 5.5 AFTER 24 HOURS: ▽ 2 ft. CAVING> ⊂ 17 ft.

www.geotechnical-solutions.com

① This information pertains only to this boring and should not be interpreted as being indicative of the site.

Depth/Elevation (Feet)	Description	USCS Class.	Sample No.	Blow Counts	Recovery (in.)	Moisture Content (%)	Liquid Limit	Plasticity Index	%#200
0 / 293	2 inches of TOPSOIL (0.16)	TOPS							
	Brown, moist, soft to very soft Lean CLAY with sand (Alluvium) Brown lean CLAY	CL	S1	WOH	20	28.2			
3 / 291			S2	WOH	24	29.5	33	14	89.6
			S3	WOH 50	10	10.0			
5.0 / 288	Reddish brown, moist, hard Weathered ROCK (Siltstone)	IGM	S4	50/3"	2	7.2			
9 / 285			S5	50/1"	1	6.7			
12 / 282			S6	50/1"	1	6.8			
15 / 279			S7	50/1"	1	6.3			
18 / 276									

Water Content - ⊗ Penetration - ● (PI — LL; 10 20 30 40 50)

Boring backfilled after 24-hour water observations.

PAGE 1 of 3

PROJECT: Hartland Drive Bridges — PROJECT NO.: GP-192603
CLIENT: Timber Ridge at Hartland, LLC — BORING NO.: BR-2
PROJECT LOCATION: Loudoun County, Virginia
LOCATION: Hartland Drive Station 75+58, CL — ELEVATION: 293.7 ft. MSL
DRILLER: Recon Drilling, Inc. (A. Espinoza) — LOGGED BY: J. Kline
DRILLING METHOD: 3.25" I.D. HSA w/Autohammer & NQ Core Bit (CME 550 — DATE: 05/15/2019
DEPTH TO WATER> INITIAL: ▽ 5.5 AFTER 24 HOURS: ▽ 2 ft. CAVING> ⊂ 17 ft.

www.geotechnical-solutions.com

② This information pertains only to this boring and should not be interpreted as being indicative of the site.

③ This information pertains only to this boring and should not be interpreted as being indicative of the site.

Depth/Elevation (Feet)	Description	USCS Class.	Sample No.	Blow Counts	Recovery (in.)	Moisture Content (%)	Liquid Limit	Plasticity Index	%#200
21 / 273			S8	50/1"	1	4.7			
24 / 270									
27 / 267			S9	50/0"	NR				
28.0	Slightly weathered, moderately hard, thin-bedded reddish brown and gray indurated and argillaceous, SANDSTONE, moderately fractured, slightly rough, with <0.2 in. separation, partially calcite-filled, hard wall rock, continuous at low to moderate angle, Core Run Length - 5 feet Recovery - 100% RQD = 82.7 = Good Quality	ROCK							
30 / 264			R1		60				
33 / 261	Slightly weathered, moderately hard, thin-bedded reddish brown indurated, argillaceous, and interbedded, SILTSTONE and SANDSTONE, moderately fractured, slightly rough, with <0.2 in. separation, partially calcite-filled, hard wall rock, continuous at low angle, Core Run Length - 5 feet Recovery - 100% RQD = 100.0 = Excellent Quality								
36 / 258			R2		60				
39 / 255	Slightly weathered, moderately hard, thin-bedded reddish brown indurated and argillaceous, SILTSTONE,		R3		60				

Water Content - ⊗ Penetration - ● (PI — LL; 10 20 30 40 50)

Boring backfilled after 24-hour water observations.

PAGE 2 of 3

PROJECT: Hartland Drive Bridges — PROJECT NO.: GP-192603
CLIENT: Timber Ridge at Hartland, LLC — BORING NO.: BR-2
PROJECT LOCATION: Loudoun County, Virginia
LOCATION: Hartland Drive Station 75+58, CL — ELEVATION: 293.7 ft. MSL
DRILLER: Recon Drilling, Inc. (A. Espinoza) — LOGGED BY: J. Kline
DRILLING METHOD: 3.25" I.D. HSA w/Autohammer & NQ Core Bit (CME 550 — DATE: 05/15/2019
DEPTH TO WATER> INITIAL: ▽ 5.5 AFTER 24 HOURS: ▽ 2 ft. CAVING> ⊂ 17 ft.

www.geotechnical-solutions.com

This information pertains only to this boring and should not be interpreted as being indicative of the site.

Depth/Elevation (Feet)	Description	USCS Class.	Sample No.	Blow Counts	Recovery (in.)	Moisture Content (%)	Liquid Limit	Plasticity Index	%#200
42 / 252	intensely to moderately fractured, slightly rough, with <0.2 in. separation, partially calcite-filled, hard wall rock, continuous at low to moderate angle, Core Run Length - 5 feet Recovery - 100% RQD = 81.0 = Good Quality Slightly weathered, moderately hard, thin-bedded reddish brown indurated and argillaceous, SILTSTONE, highly to moderately fractured, slightly rough, with <0.2 in. separation, partially calcite-filled, hard wall rock, continuous at low to moderate angle, Core Run Length - 5 feet Recovery - 100% RQD = 96.4 = Excellent Quality Auger refusal at 28 feet, rock core terminated at 48 feet.								
45 / 249			R4		60				
48 / 246									
51 / 243									
54 / 240									
57 / 237									
60 / 234									

Water Content - ⊗ Penetration - ● (PI — LL; 10 20 30 40 50)

Boring backfilled after 24-hour water observations.

PAGE 3 of 3

The subsurface information shown on the boring logs in these plans was obtained with reasonable care and recorded in good faith solely for use by the Department in establishing design controls for the project. The Department has no reason to suspect that such information is not reasonably accurate as an approximate indication of the subsurface conditions at the sites where the borings were taken. The Department does not in any way warrant or guarantee that such data can be projected as indicative of conditions beyond the limits of the borings shown; and any such projections by bidders are purely interpretive and altogether speculative. Further, the Department does not in any way guarantee, either expressly or by implication, the sufficiency of the information for bid purposes.

The boring logs are made available to bidders in order that they may have access to subsurface data identical to that which is possessed by the Department, and are not intended as a substitute for personal investigation, interpretation and judgment by the bidders.

① Pier bottom of footing elevation, 287.50

② Pier Footing 2 estimated pile tip elevation, 268.80

③ Pier Footing 1 estimated pile tip elevation, 262.00

PRELIMINARY PLANS

THESE PLANS NOT TO BE USED FOR CONSTRUCTION

046

Dewberry

Dewberry Engineers Inc.
8401 ARLINGTON BLVD.
FAIRFAX, VA 22031
PHONE: 703.849.0100
FAX: 703.849.0518

HARTLAND DRIVE OVER BROAD RUN
LOUDOUN COUNTY
CPAP-2020-0009

SEAL

A copy of the original signed geotechnical submittal is on file in the District Office.

No.	DATE	BY	Description

REVISIONS

DESIGNED BY TPV
DRAWN BY JPD
CHECKED BY PCA
DATE APRIL 2020

TITLE

ENGINEERING GEOLOGY - 6

PROJECT NO. 50113885

XXX-XX

SHEET NO. 46 of 49

Received by VMRC September 1, 2020 /blh

PROJECT: Hartland Drive Bridges — PROJECT NO.: GP-192603
CLIENT: Timber Ridge at Hartland, LLC — BORING NO.: BR-3
PROJECT LOCATION: Loudoun County, Virginia
LOCATION: Hartland Drive Station 77+20, CL — ELEVATION: 299.32 ft. MSL
DRILLER: Recon Drilling, Inc. (A. Espinoza) — LOGGED BY: J. Kline
DRILLING METHOD: 3.25" I.D. HSA w/Autohammer & NQ Core Bit (CME 550 — DATE: 05/17/2019
DEPTH TO WATER> INITIAL: ▽ 5 ft. AFTER 24 HOURS: ▽ 5 ft. CAVING> ▽ 14 ft.

www.geotechnical-solutions.com

This information pertains only to this boring and should not be interpreted as being indicative of the site

Depth/Elevation (Feet)	Description	USCS Class.	Sample No.	Blow Counts	Recovery (in.)	Moisture Content (%)	Liquid Limit	Plasticity Index	%#200
0	3 inches of TOPSOIL	TOPS							
	0.25 Brown, moist, medium stiff sandy Lean CLAY	CL	S1	2 3 4 6	14	20.1			
297	2.0 Brown, moist, very stiff sandy SILT	ML	S2	8 14 17 40	24	9.3			
3	3.5 Brown, moist, very hard Weathered ROCK (Siltstone)	IGM	S3	50/5"	5	18.6			
294			S4	50/5"	5	7.2			
6			S5	50/3"	2	5.7			
291			S6	50/1"	1	5.2			
9			S7	50/0"	NR				
288									
12									
285									
15	16.0 Slightly weathered, moderately hard, thin-bedded reddish brown and grayish brown indurated and argillaceous, SANDSTONE, highly to moderately fractured, slightly rough, with <0.2 in. separation, partially calcite-filled, hard wall rock, continuous at low to moderate	ROCK	R1		60				
282									
18									
279									

Water Content - ⊗ Penetration - ● (PI — LL; 10 20 30 40 50)

Boring backfilled after 24-hour water observations.

PAGE 1 of 2

PROJECT: Hartland Drive Bridges — PROJECT NO.: GP-192603
CLIENT: Timber Ridge at Hartland, LLC — BORING NO.: BR-3
PROJECT LOCATION: Loudoun County, Virginia
LOCATION: Hartland Drive Station 77+20, CL — ELEVATION: 299.32 ft. MSL
DRILLER: Recon Drilling, Inc. (A. Espinoza) — LOGGED BY: J. Kline
DRILLING METHOD: 3.25" I.D. HSA w/Autohammer & NQ Core Bit (CME 550 — DATE: 05/17/2019
DEPTH TO WATER> INITIAL: ▽ 5 ft. AFTER 24 HOURS: ▽ 5 ft. CAVING> ▽ 14 ft.

www.geotechnical-solutions.com

This information pertains only to this boring and should not be interpreted as being indicative of the site

Depth/Elevation (Feet)	Description	USCS Class.	Sample No.	Blow Counts	Recovery (in.)	Moisture Content (%)	Liquid Limit	Plasticity Index	%#200
21	angle, Core Run Length - 5 feet Recovery - 100% RQD = 77.3 = Good Quality Slightly weathered, moderately hard, thin-bedded reddish brown and grayish brown indurated, argillaceous, and interbedded, SILTSTONE and SANDSTONE, highlyt to moderately fractured, slightly rough, with <0.2 in. separation, partially calcite-filled, hard wall rock, continuous at low to moderate angle, Core Run Length - 5 feet Recovery - 100% RQD = 52.7 = Fair Quality Slightly weathered, moderately hard, thin-bedded reddish brown indurated and argillaceous, SILTSTONE, intensely to moderately fractured, slightly rough, with <0.2 in. separation, partially calcite-filled, hard wall rock, continuous at low to moderate angle, Core Run Length - 5 feet Recovery - 100% RQD = 68.1 = Fair Quality Slightly weathered, moderately hard, thin-bedded reddish brown, grayish brown and gray indurated, argillaceous, and interbedded, SILTSTONE and SANDSTONE, intensely to highly fractured, slightly rough, with <0.2 in. separation, partially calcite-filled, hard wall rock, continuous at low to high angle, Core Run Length - 5 feet Recovery - 100% RQD = 73.75 = Fair Quality Auger refusal at 16 feet, rock core terminated at 36 feet.		R2		60				
276									
24									
273			R3		60				
27									
270									
30									
267			R4		60				
33									
264									
36									
261									
39									

Water Content - ⊗ Penetration - ● (PI — LL; 10 20 30 40 50)

Boring backfilled after 24-hour water observations.

PAGE 2 of 2

The subsurface information shown on the boring logs in these plans was obtained with reasonable care and recorded in good faith solely for use by the Department in establishing design controls for the project. The Department has no reason to suspect that such information is not reasonably accurate as an approximate indication of the subsurface conditions at the sites where the borings were taken. The Department does not in any way warrant or guarantee that such data can be projected as indicative of conditions beyond the limits of the borings shown; and any such projections by bidders are purely interpretive and altogether speculative. Further, the Department does not in any way guarantee, either expressly or by implication, the sufficiency of the information for bid purposes.

The boring logs are made available to bidders in order that they may have access to subsurface data identical to that which is possessed by the Department, and are not intended as a substitute for personal investigation, interpretation and judgment by the bidders.

PRELIMINARY PLANS
THESE PLANS NOT TO BE USED FOR CONSTRUCTION

Dewberry

Dewberry Engineers Inc.
8401 ARLINGTON BLVD.
FAIRFAX, VA 22031
PHONE: 703.849.0100
FAX: 703.849.0518

HARTLAND DRIVE OVER BROAD RUN
LOUDOUN COUNTY
CPAP-2020-0009

SEAL

A copy of the original signed geotechnical submittal is on file in the District Office.

No.	DATE	BY	Description

REVISIONS

DESIGNED BY TPV
DRAWN BY JPD
CHECKED BY PCA
DATE APRIL 2020

TITLE

ENGINEERING GEOLOGY - 7

PROJECT NO. 50113885

XXX-XX

SHEET NO. 47 of 49

Received by VMRC September 1, 2020 /blh

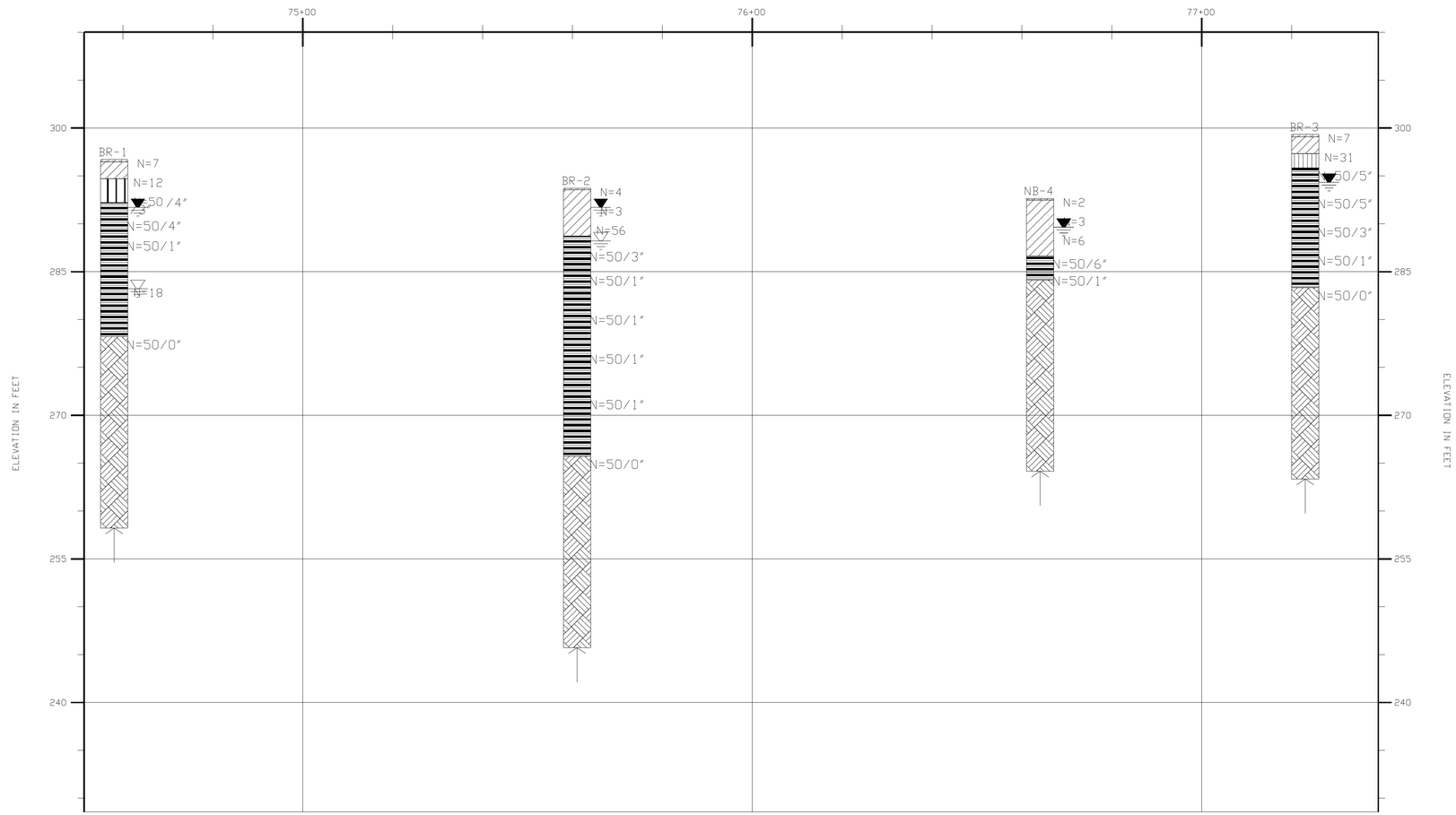

Strata symbols

- Topsoil
- Low plasticity clay
- Elastic silt
- Weathered Rock
- Bedrock
- Silt

The subsurface information shown on the boring logs in these plans was obtained with reasonable care and recorded in good faith solely for use by the Department in establishing design controls for the project. The Department has no reason to suspect that such information is not reasonably accurate as an approximate indication of the subsurface conditions at the sites where the borings were taken. The Department does not in any way warrant or guarantee that such data can be projected as indicative of conditions beyond the limits of the borings shown; and any such projections by bidders are purely interpretive and altogether speculative. Further, the Department does not in any way guarantee, either expressly or by implication, the sufficiency of the information for bid purposes.

The boring logs are made available to bidders in order that they may have access to subsurface data identical to that which is possessed by the Department, and are not intended as a substitute for personal investigation, interpretation and judgment by the bidders.

PRELIMINARY PLANS

THESE PLANS NOT TO BE USED FOR CONSTRUCTION

048

Dewberry

Dewberry Engineers Inc.
8401 ARLINGTON BLVD.
FAIRFAX, VA 22031
PHONE: 703.849.0100
FAX: 703.849.0518

HARTLAND DRIVE OVER BROAD RUN
LOUDOUN COUNTY
CPAP-2020-0009

SEAL

A copy of the original signed geotechnical submittal is on file in the District Office.

No.	DATE	BY	Description

REVISIONS

DESIGNED BY	TPV
DRAWN BY	JPD
CHECKED BY	PCA
DATE	APRIL 2020

TITLE

ENGINEERING GEOLOGY - 8

PROJECT NO. 50113885

XXX-XX

SHEET NO. 48 of 49

Received by VMRC September 1, 2020 /blh

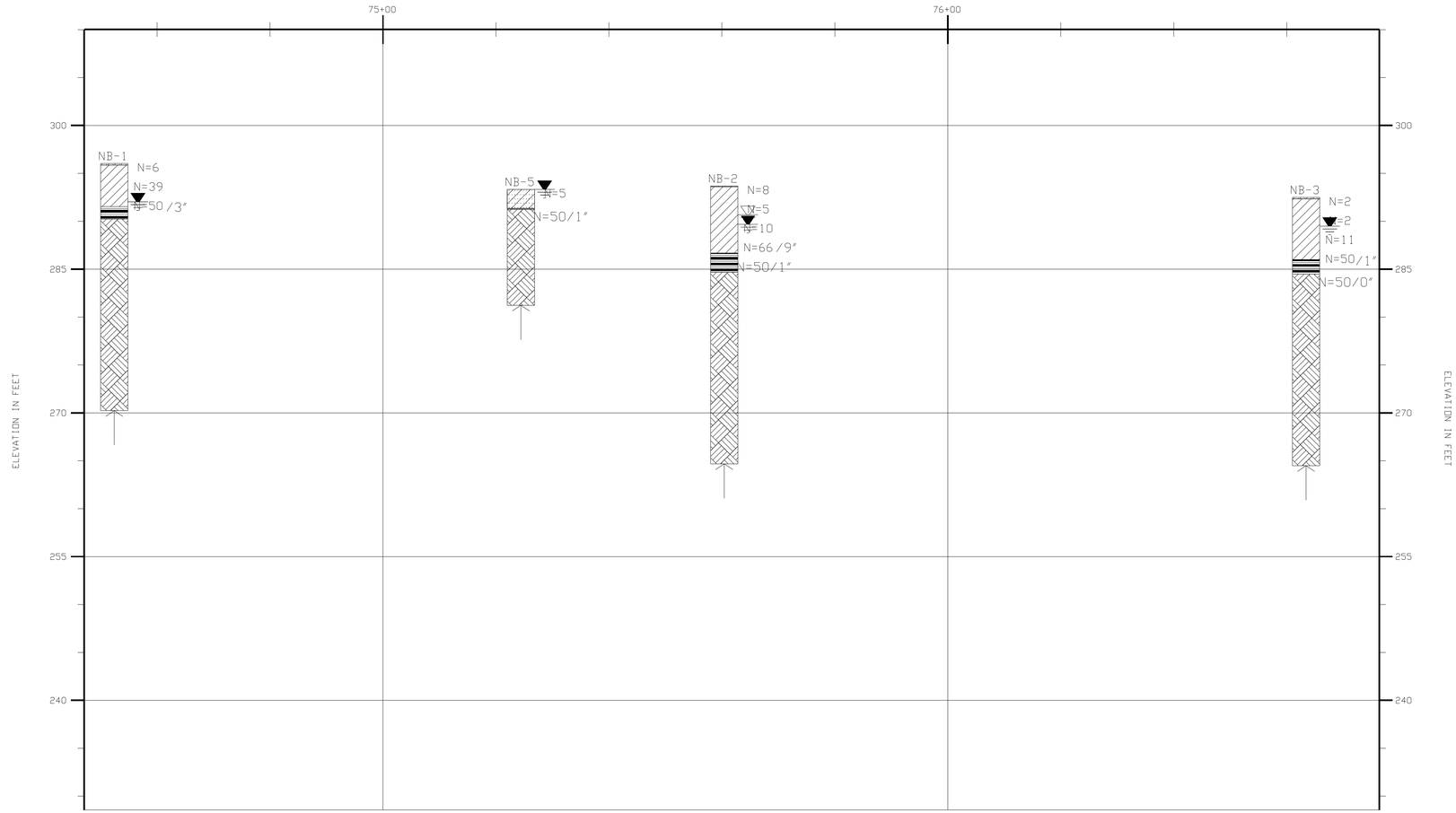

Strata symbols

- Topsoil
- Low plasticity clay
- Weathered Rock
- Bedrock
- Clayey sand

The subsurface information shown on the boring logs in these plans was obtained with reasonable care and recorded in good faith solely for use by the Department in establishing design controls for the project. The Department has no reason to suspect that such information is not reasonably accurate as an approximate indication of the subsurface conditions at the sites where the borings were taken. The Department does not in any way warrant or guarantee that such data can be projected as indicative of conditions beyond the limits of the borings shown; and any such projections by bidders are purely interpretive and altogether speculative. Further, the Department does not in any way guarantee, either expressly or by implication, the sufficiency of the information for bid purposes.

The boring logs are made available to bidders in order that they may have access to subsurface data identical to that which is possessed by the Department, and are not intended as a substitute for personal investigation, interpretation and judgment by the bidders.

PRELIMINARY PLANS

THESE PLANS NOT TO BE USED FOR CONSTRUCTION

049

Dewberry

Dewberry Engineers Inc.
8401 ARLINGTON BLVD.
FAIRFAX, VA 22031
PHONE: 703.849.0100
FAX: 703.849.0518

HARTLAND DRIVE OVER BROAD RUN

LOUDOUN COUNTY

CPAP-2020-0009

SEAL

A copy of the original signed geotechnical submittal is on file in the District Office.

No.	DATE	BY	Description

REVISIONS

DESIGNED BY TPV

DRAWN BY JPD

CHECKED BY PCA

DATE APRIL 2020

TITLE

ENGINEERING GEOLOGY - 9

PROJECT NO. 50113885

XXX-XX

SHEET NO. 49 of 49

Received by VMRC September 1, 2020 /blh

Timber Ridge at Hartland
North Bridge Scour Report

04/06/2020

Prepared By:

Dewberry

Prepared for:

HARTLAND
VIRGINIA

VDOT Virginia Department of Transportation

COMMONWEALTH OF VIRGINIA
JAMES C. FILSON, II
Lic. No. 030714
4/8/2020
PROFESSIONAL ENGINEER

Received by VMRC September 1, 2020 /blh

Table of Contents

Introduction 2
Bridge Scour Components 4
Long–term Scour and Stream Stability 4
Geotechnical Investigations and Data 5
Potential Scour Calculations 7
Contraction Scour 8
Pier Scour 8
Abutment Scour 8
Recommended Foundation Elevations 9
References 13

Appendix A- Geotechnical Data 14
Appendix B-Detailed Scour Calculations 36

Received by VMRC September 1, 2020 /blh

Introduction

This report summarizes the bridge scour analysis for the proposed North Bridge over North Fork Broad Run. This bridge is planned in conjunction with the Timber Ridge at Hartland Development project. The project site is in Loudoun County and the property is located West of Fleetwood Road and East of Everfield Drive. A hydraulic study is included in Loudoun County Floodplain Alteration Study (FPAL) already submitted by Dewberry to Loudoun County for review and approval. Please refer to FPAL-2020-0003 for details of hydraulic modeling. Also, a CLOMR package has been submitted to FEMA. Two new bridges are proposed as part of this development, one over North Fork Broad Run ("North Bridge") and the other over Tributary 1 to North Fork Broad Run ("South Bridge"). Figure 1 shows the project location and the location of the proposed new roadway and bridges. This report summarizes the scour analysis for the North Bridge. The scour analysis for the South Bridge is included in a separate report.

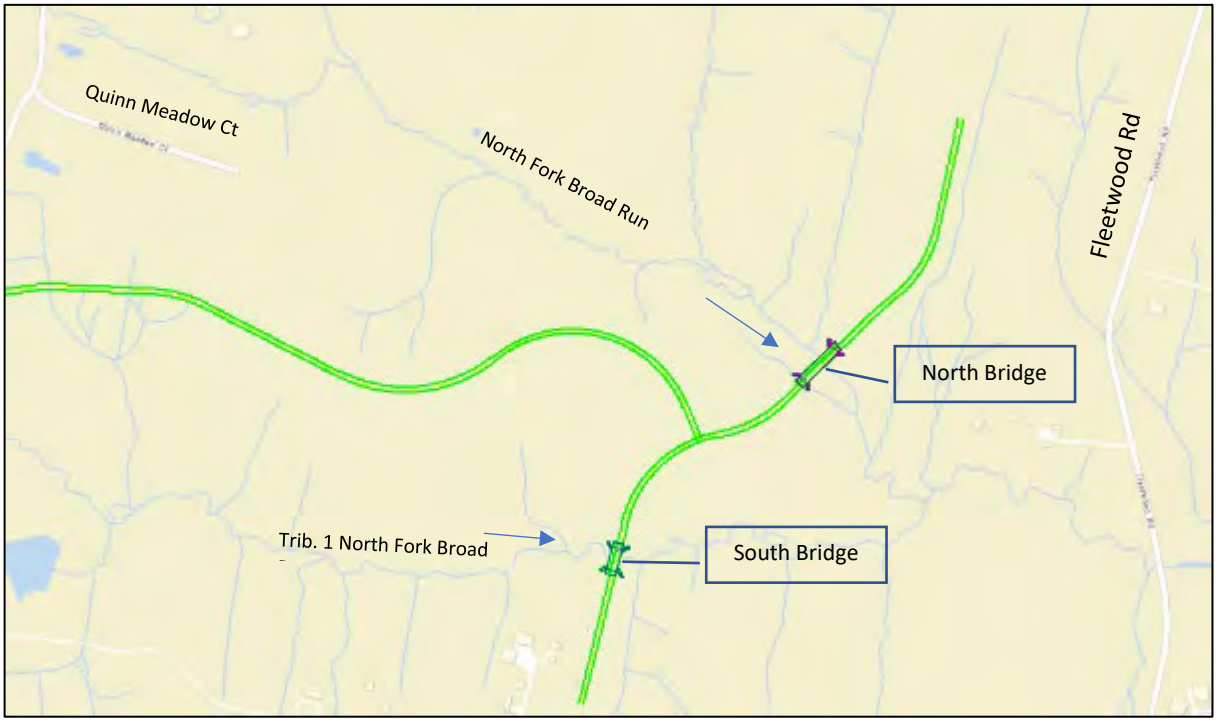

Figure 1. Project Area showing Location of the Proposed Roadway and Bridges in Loudoun County.

The hydraulic model for the proposed condition was developed in HEC-RAS Version 5.0.1 during the floodplain alteration analysis. Figure 2 shows the HEC-RAS bridge section on the upstream side showing both the 100-year and the 500-year water surface elevations. As seen in Figure 2 both the 100- and 500-year discharges pass under the bridge with no roadway overtopping. Both the 100- and 500-year scour values are calculated in this study. However, because the 500-year flow depths and velocities are considerably larger than the 100-year values, the 500-year profile would be used for design purposes. This is consistent with structural stability requirements to consider the 500-year scour or extreme floods.

Received by VMRC September 1, 2020 /blh

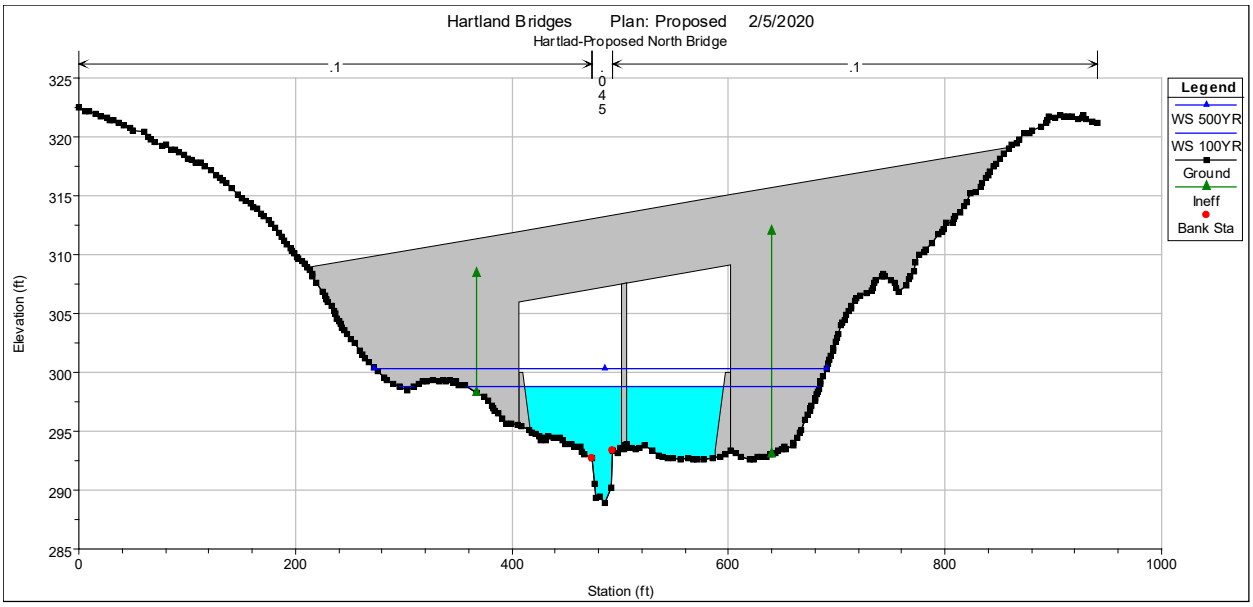

Figure 2. HEC-RAS Bridge Section on Upstream Side with 100- and 500-year WSEs.

Figure 3 shows the HEC-RAS stream and cross sections around the Proposed Bridge.

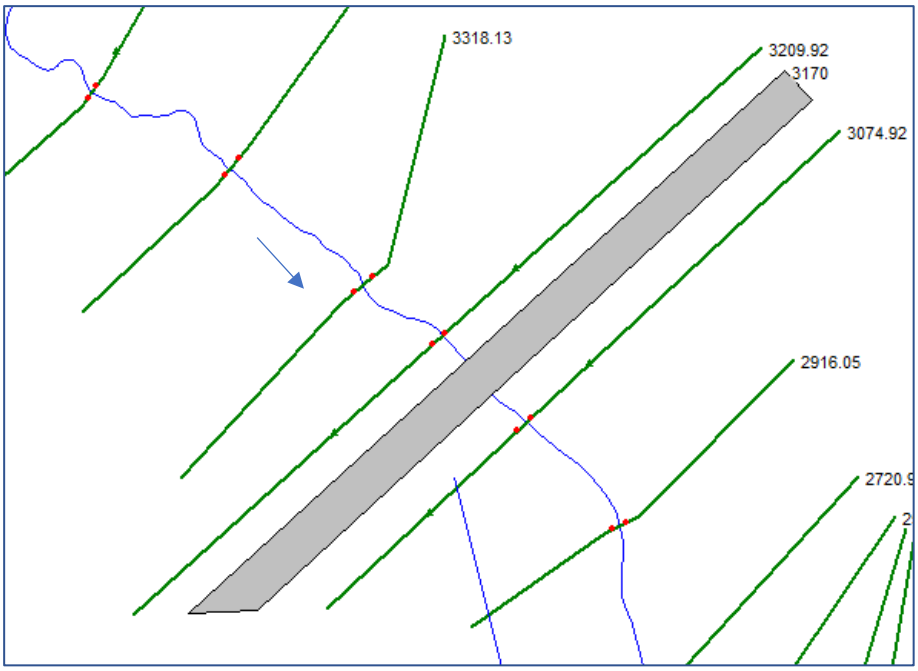

Figure 3. HEC-RAS Geometry around Proposed Bridge.

Received by VMRC September 1, 2020 /blh

Bridge Scour Components

The total bridge scour depth is the sum of scour components: long-term aggradation or degradation, contraction scour and local scour at abutments and piers. Each of the scour components were evaluated as described in the following sections.

Long–term Scour and Stream Stability

Long-term scour may consist of aggradation or degradation causing a rise or fall of the streambed elevation, respectively. Field observations do not point to evidence of long-term aggradation or degradation or significant bank erosion at the location of the proposed crossing. Therefore, the long-term scour was assumed to be negligible in this case.

The stream stability indicators were evaluated according to the procedure outlined in HEC-20 Tables 5.5 and 5.6. Figure 4 shows the aerial image of the site and the stream path and Table 1 shows the calculations for the stream stability evaluation. The stream stability evaluation results in Table 1 indicated an overall score of 40 which for this type of stream (pool-riffle and plane-bed channel) indicates the "Excellent" category assigned to all cases with a score below 49. Also, the vertical and horizontal stability ratios are 0.25 and 0.24, respectively indicating a stable stream. However, the channel thalweg could potentially exhibits a slight shifting (migration) thus impacting the bridge pier which is located close to the main channel (See Figure 2). To ensure a conservative scour analysis the channel hydraulic depth and flow velocity were used in evaluating local pier scour.

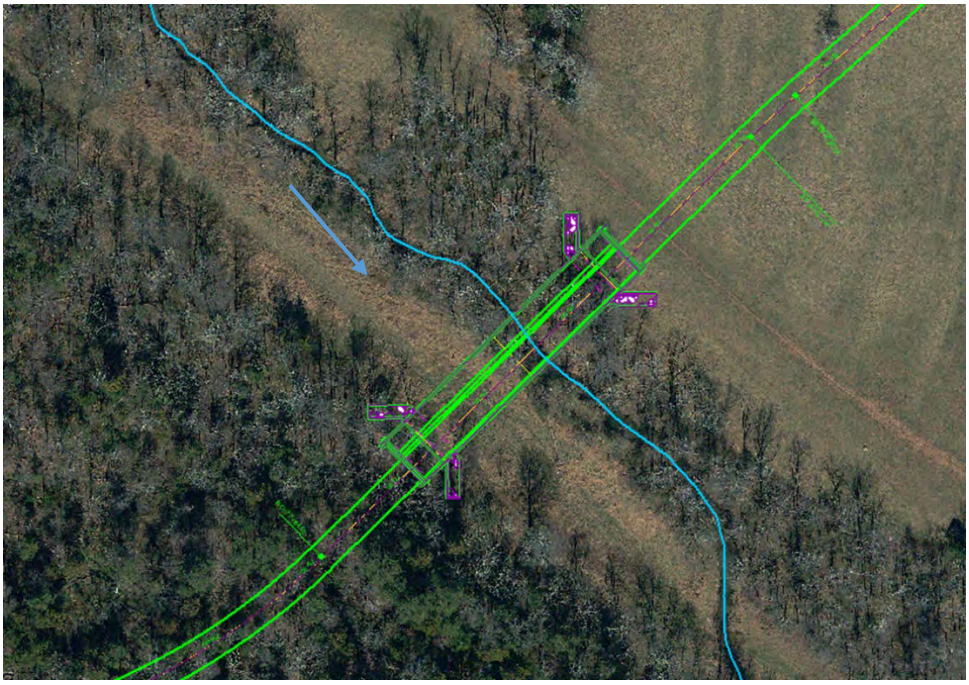

Figure 4. Aerial Image of the Site showing Stream Path and Footprint of Proposed Bridge.

Received by VMRC September 1, 2020 /blh

Table 1. Stream Stability Evaluation.

HEC-20 Table 5.5 stability indicator scores			
Stability Indicator No.	Rating	Score	Notes
1	Fair	7	Urbanization in future
2	Excellent	2	First order stream.
3	Excellent	2	Straight
4	Excellent	2	
5	Good	5	
6	Excellent	2	
7	Excellent	3	
8	Good	5	Top soil mostly Sandy Lean Clay
9	Excellent	3	bank slope<3H:1V
10	Excellent	3	
11	Excellent	2	
12	Excellent	2	
13	Excellent	2	No Bend nearby
	sum=	**40**	**Between 49 to 85, Good**
Vertical Stability			
Sum of No.s 4-6=	9		
Max of Nos. 4-6 =	36		
Ratio=	**0.25**	**very low**	
Horizontal Stability			
Sum of No.s 8-13=	17		
Max of Nos. 8-13 =	72		
Ratio=	**0.24**	**low**	

Geotechnical Investigations and Data

The geotechnical field investigations for this project were conducted by Geotechnical Solutions, Inc. and the results were summarized in a report entitled "Subsurface Exploration and Geotechnical Recommendations, (Geotechnical Solutions Inc., 2020). Selected pages from the geotechnical engineering report are given in Appendix A including boring logs and the results for particle size distribution tests. These borings provide detailed logs of the soil and rock including the Rock Quality Designation (RQD) that would indicate whether a non-scourable layer exists at that location. Generally, formations with RQD values larger than 50% are considered resistant to scour. In this case, Geotechnical Solutions Inc. (2020) identified rock in Stratum IV which was encountered at auger refusal depths at each NB-series and SB-series borings. They evaluated Rock Erodibility Index for the siltstone rock of Stratum IV for both the North and South bridges. Section 4.7 of Geotechnical Solutions Inc. (2020) which includes this evaluation can be found at the end of Appendix A. Based on this evaluation, Geotechnical Solutions Inc. (2020) expressed their professional opinion that "the rock of Stratum IV is highly resistant to scour". Therefore, regardless of the RQD value, the formation below the top elevation of the rock in Stratum IV may be considered as non-scourable. Figure 5 shows the location of the borings at and near the proposed bridge structure. The main observations from all relevant borings (depth to and elevation of the scour-resistant Stratum IV and layer with RQD>50%) are summarized in Table 2. In some cases (i.e. NB-1) RQD>50% layer is the same as Stratum IV because the top section of Stratum VI had an RQD>50%. In other cases (BR-1) the top elevation of Stratum IV is higher than the RQD>50% because the top section of the stratum had an RQD<50%. Also, more than one elevation to Stratum IV and RQD>50%

Received by VMRC September 1, 2020 /blh

layer is available at each abutment and at the pier. For design purposes, at each structure the lowest scour-resistant elevation was selected as shown in bold numbers in Table 2. Table 2 also gives the available D_{50} and D_{84} (only for pier) values at each location. The selected D_{50} for two locations are finer than 0.2 mm. Per HEC-18 guidance several scour calculations use a minimum D_{50} of 0.2 mm.

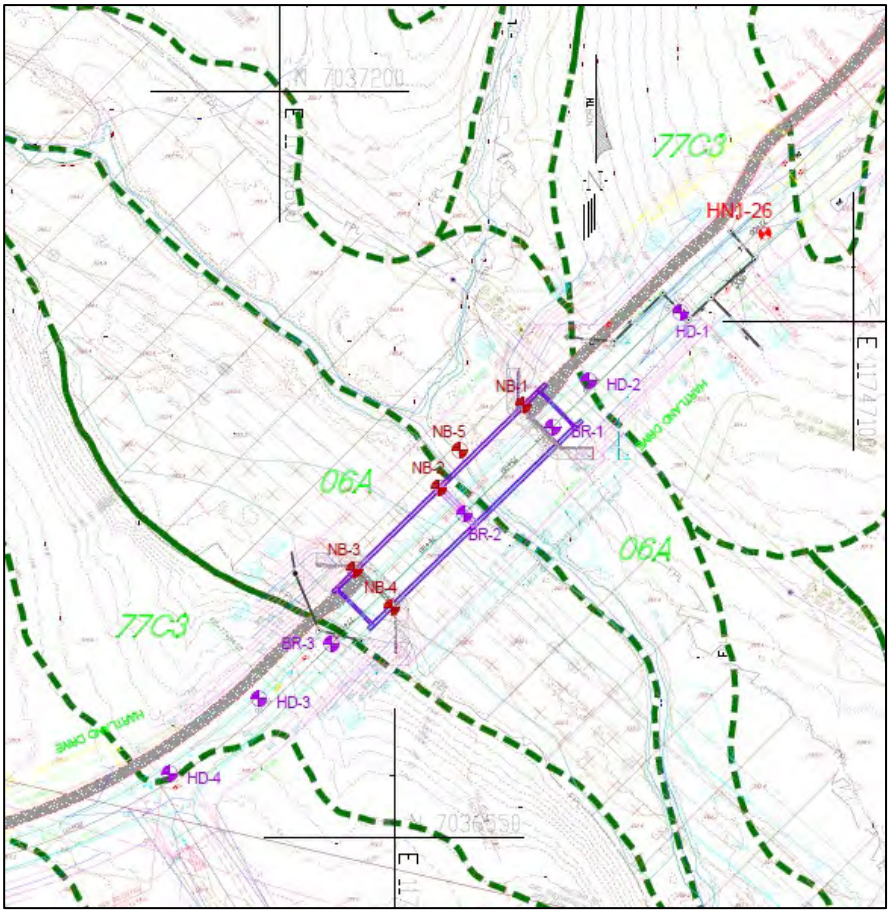

Figure 5. Boring Locations at or near proposed Bridge.

Table 2. Boring Data and Selected Non-scourable Layer Elevations.

Boring	Location	GSE	Depth to Stratum IV	Elev. of Stratum IV	Depth to RQD>50 %	Elev. of RQD>50 %	RQD	D50 (mm)	D84 (mm)
NB-1	u/s of L Abut	296.02	5.8	290.22	10.8	285.22	95.6	0.0388	
BR-1	Bridge CL near L Abut	296.7	18.5	278.2	18.5	278.2	98.3		
Non-scourable elevation at L Abut. Set based on BR-1=				***278.2***					
NB-2	u/s of Pier	293.67	9	284.67	14	279.67	90.8	0.0215	0.44
BR-2	Bridge CL near Pier	293.7	28	265.7	28	265.7	82.7		
Non-scourable elevation at Pier. Set based on BR-2=				***265.7***					
NB-3	u/s of R Abut	292.48	8	284.48	13	279.48	73.75		
NB-4	d/s of R Abut	292.63	8.5	284.13	8.5	284.13	59.8		
Non-scourable elevation at R Abut. Set based on NB-3=				***279.48***					
NB-5	Channel u/s of Bridge	293.32	2.1	291.22	2.1	***291.22***	81.5	0.2623	

Received by VMRC September 1, 2020 /blh

Potential Scour Calculations

All scour calculations in this report were performed following the procedures and equations outlined in Federal Highway Administration's HEC-18 (Fifth Ed., April 2012). The hydraulic parameters required for the scour calculations were taken from the proposed conditions HEC-RAS model. Tables 3 and 4 summarizes the 100- and 500-year potential scour depth results, respectively.

Table 3. Summary of 100-year Potential Scour Depths.

Type of Scour	Location	Depth (ft)
Long-Term	Cross Section	0.0
Contraction	Main Channel	4.4
Contraction	LOB (looking d/s)	2.1
Contraction	ROB (looking d/s)	1.8
Pressure Flow	under bridge opening	Not calculated
Simple Pier (Potential Scour)	Pier	6.8
Total Scour at Pier (pier+contr. or press. scour)	Pier	8.7
Abutment (Potential Scour)	Abut. A (Left Abut. looking d/s)	8.2
Total Scour at Abutment	Abut. A (Left Abut. looking d/s)	8.2
Abutment (Potential Scour)	Abut. B (Right Abut. looking d/s)	17.3
Total Scour at Abutment	Abut. B (Right Abut. looking d/s)	17.3

Notes: Contraction scour type selected for channel is: Live-bed; for LOB is: Clear-water; for ROB is: Live-bed,
Total scour at pier caluclated by adding ROB contraction scour to pier scour depth.
Left Abut. Scour is calculated by NCHRP 24-20, therefor contraction scour is not added to it to get the total scour.
Right Abut. Scour is calculated by NCHRP 24-20, therefor contraction scour is not added to it to get the total scour.

Table 4. Summary of 500-year Potential Scour Depths.

Type of Scour	**Location**	**Depth (ft)**
Long-Term	Cross Section	0.0
Contraction	Main Channel	7.5
Contraction	LOB (looking d/s)	3.4
Contraction	ROB (looking d/s)	3.3
Pressure Flow	under bridge opening	Not calculated
Simple Pier (Potential Scour)	Pier	7.6
Total Scour at Pier (pier+contr. or press. scour)	Pier	10.9
Abutment (Potential Scour)	Abut. A (Left Abut. looking d/s)	14.8
Total Scour at Abutment	Abut. A (Left Abut. looking d/s)	14.8
Abutment (Potential Scour)	Abut. B (Right Abut. looking d/s)	29.3
Total Scour at Abutment	Abut. B (Right Abut. looking d/s)	29.3

Notes: Contraction scour type selected for channel is: Live-bed; for LOB is: Live-bed; for ROB is: Live-bed,
Total scour at pier caluclated by adding ROB contraction scour to pier scour depth.
Left Abut. Scour is calculated by NCHRP 24-20, therefore contraction scour is not added to it to get the total scour.
Right Abut. Scour is calculated by NCHRP 24-20, therefore contraction scour is not added to it to get the total scour.

Received by VMRC September 1, 2020 /blh

Note that following the HEC-RAS model orientation, the left and right overbanks and structures in Tables 3 and 4 are orientated looking downstream. At this crossing, the stream flows West to East. The left abutment looking downstream (on North side of the bridge) is labeled as Abutment A in bridge plans. The right abutment looking downstream (on South side of the bridge) is labeled as Abutment B in bridge plans.

The scour evaluation for each scour component is explained below.

Contraction Scour

The proposed bridge abutments will both be set-back from the channel. Therefore, contraction scour is required to be calculated for the main channel as well as the left and right overbanks. To determine if the prevailing flow velocity and depth would cause Live Bed or Clear Water contraction scour, the value of the median bed material particle size (D_{50}) needs to be used. The D_{50} values shown in Table 2 in combination with hydraulic parameters from HEC-RAS allowed the evaluation of the critical velocity required to detach and suspend the material in the flood flow. For the 100-year profile, flow velocity at the main channel and the right overbank will exceed the value of the critical velocity. Therefore, the contraction scour for the main channel and the right overbank was evaluated using Live Bed Equation in HEC-18. Clear water scour was selected for the left overbank contraction scour. The 500-year flow velocity at the main channel and both overbanks will exceed the value of the critical velocity. Therefore, the contraction scour for the main channel and each overbank was evaluated using Live Bed Equation in HEC-18 for the 500-year profile. Table 3 and 4 show the results of the contraction scour for the 100- and 500-year profiles, respectively. Details of contraction scour calculations are provided in Appendix B.

Pier Scour

The proposed bridge section will have a round pier on the right overbank adjacent to the right bank station (see Figure 2). The pier diameter is 4'. The pier scour in HEC-18 is evaluated by the Modified CSU Equation. This equation requires mean velocity and depth of flow directly upstream of each pier. Due to proximity of pier to main channel these values were estimated by the average channel values from the HEC-RAS cross section just upstream of the proposed bridge. Details of pier scour calculations for the 100- and 500-year profiles are provided in Appendix B. As indicated in Table 3, the 100-year potential pier scour would be 6.8'. The total 100-year scour at the pier was calculated as the sum of the local pier scour and the contraction scour for the right overbank to be 8.7'. As indicated in Table 4, the 500-year potential pier scour would be 7.6'. The total 500-year scour at the pier was calculated as the sum of the local pier scour and the contraction scour for the right overbank to be 10.9'.

Abutment Scour

As seen in Figure 2, the abutments would partially block both the 100-year and the 500-year peak discharges. Therefore, we need to evaluate the abutment scour depth at each abutment. The abutment scour was evaluated by the NCHRP 24-20 Equations which are a set of equations introduced in the Fifth Ed. of HEC-18 published in 2012. These equations treat abutment scour as amplified contraction scour and do not require overbank contraction scour depths to be added to the abutment scour depths. There are two other abutment scour equations in HEC-18 (Froehlich and HIRE) but the NCHRP 24-20 Equations are newer and more rigorous than the two older equations and are the preferred method if they provide reasonable scour values for the subject bridge. All detailed abutment scour calculations can be found in Appendix B. Because the abutment scour depths in Tables 3 and 4 were all estimated using the NCHRP 24-20 Equations there is no need to add contraction scour to them to get the total scour depths.

Received by VMRC September 1, 2020 /blh

Therefore, the total potential 100-year scour depth at left abutment (Abutment A) is 8.2' and at right abutment (Abutment B) is 17.3'. The total potential 500-year scour depth at left abutment (Abutment A) is 14.8' and at right abutment (Abutment B) is 29.3'.

Recommended Foundation Elevations

Tables 5 and 6 summarize the potential scour depths and bottom elevations for the 100-year and 500-year profiles, respectively. The total scour depth at the pier is additive between the local and contraction scour. Tables 5 and 6 also include the approximate elevation of the Scour-resistant (non-scourable rock from Table 2) at each location. The elevations given in the fifth column of these tables represent the lowest elevation of unrestricted potential scour. When the elevation of the non-scourable rock is higher than the potential scour elevation, the scour depth will be limited by the non-scourable rock layer.

Table 5. 100-year Potential Scour Depths and Elevation and the Scour-safe Elevations.

Design Discharge Return Period (Tr): 100-Year							
Ground Surface Elev. (ft)	Contraction or Pressure Flow Scour (ft)	Abutment or pier Scour Depth (ft)	Total Scour Depth (ft)	Lowest El. of Unrestricted Potential Scour (ft)	Approx. Scour Resistant El. (ft)	**Scour-safe Foundation El. (ft)**	Note
Abut. A (Left Abut. looking d/s)							
300.00	2.1	8.2	8.2	291.8	278.2	**291.8**	Scour Not limited by bedrock
Pier							
293.43	1.8	6.8	8.7	284.8	265.7	**284.8**	Scour Not limited by bedrock
Abut. B (Right Abut. looking d/s)							
294.00	1.8	17.3	17.3	276.7	279.5	**279.5**	Scour is limited by bedrock

Total scour at pier caluclated by adding ROB contraction scour to pier scour depth. GSE for Abutments set at top of riprap.
Left Abut. Scour is calculated by NCHRP 24-20, therefore contraction scour is no contraction scour is not added to it to get the total scour.
Right Abut. Scour is calculated by NCHRP 24-20, therefore contraction scour is not added to it to get the total scour.

Table 6. 500-year Potential Scour Depths and Elevation and the Scour-safe Elevations

Design Discharge Return Period (Tr): 500-Year							
Ground Surface Elev. (ft)	Contraction or Pressure Flow Scour (ft)	Abutment or pier Scour Depth (ft)	Total Scour Depth (ft)	Lowest El. of Unrestricted Potential Scour (ft)	Approx. Scour Resistant El. (ft)	**Scour-safe Foundation El. (ft)**	Note
Abut. A (Left Abut. looking d/s)							
300.00	3.4	14.8	14.8	285.2	278.2	**285.2**	Scour Not limited by bedrock
Pier							
293.43	3.3	7.6	10.9	282.5	265.7	**282.5**	Scour Not limited by bedrock
Abut. B (Right Abut. looking d/s)							
294.00	3.3	29.3	29.3	264.7	279.5	**279.5**	Scour is limited by bedrock

Total scour at pier caluclated by adding ROB contraction scour to pier scour depth. GSE for Abutments set at top of riprap.
Left Abut. Scour is calculated by NCHRP 24-20, therefore contraction scc contraction scour is not added to it to get the total scour.
Right Abut. Scour is calculated by NCHRP 24-20, therefore contraction scour is not added to it to get the total scour.

At each location the non-scourable layer elevation used in Tables 5 and 6 are the lower of the two elevations recorded along each structure location as designed. The scour safe foundation elevations are

Received by VMRC September 1, 2020 /blh

given as the higher elevation between columns 5 and 6. For the left abutment and the pier, the notes indicate the bottom of scour elevation is not restricted by bedrock. However, the right abutment scour is expected to be restricted by bedrock both for the 100- and 500-year profiles.

Figures 6 and 7 are the scour plots for the 100- and 500-year profiles, respectively. The orientation in Figures 6 and 7 is looking downstream and all elevations in the scour plots are in NAVD 88 vertical datum. The ground surface elevations shown in Figures 6 and 7 are from the HEC-RAS cross section just upstream of the Bridge. The ground surface elevations in the first column of Tables 5 and 6 and in the scour plots for each abutment is adjusted to the top elevation of Class I riprap. The 500-year scour depths are larger than the 100-year values. Therefore, the 500-year profile is used for deciding which foundation elevation is safe against scour. The abutment and pier lowest foundation elevations shown in Figure 7 correspond to the scour-safe elevations summarized in Table 6 for the 500-year profile.

Based on the 500-year scour results in Table 6 and Figure 7 the following summarizes foundation elevation recommendations for the proposed bridge:

Abutment A (Left Abutment Looking downstream)

The scour-safe foundation elevation is approximately at 285.2' based on the expectation that non-scourable rock will not be encountered above this elevation. If during the construction of this abutment the non-scourable rock is observed at a higher elevation the foundation may be adjusted to that elevation. This determination must be documented and approved by the project geotechnical engineer.

Abutment B (Right Abutment Looking downstream)

The scour-safe foundation elevation is approximately at 279.5' based on the expectation that non-scourable rock will be encountered at this elevation. If during the construction of this abutment for the non-scourable rock is observed at a higher or lower elevation the foundation may be adjusted to that elevation. This determination must be documented and approved by the project geotechnical engineer. In any case, the maximum required depth of foundation is limited to 29.3' of potential scour at this location.

Pier

The scour-safe foundation elevation is approximately at 282.5' based on the total potential scour depth calculation. If during the construction of the pier non-scourable rock is observed or encountered at a higher elevation the foundation may be adjusted to that elevation. This determination must be documented and approved by the project geotechnical engineer.

When the bridge foundations are constructed as recommended above there will be no need for scour countermeasures to protect the piers or abutments against scour. Riprap Class I will be provided at abutment slopes to provide slope protection but is not considered a scour countermeasure.

Received by VMRC September 1, 2020 /blh

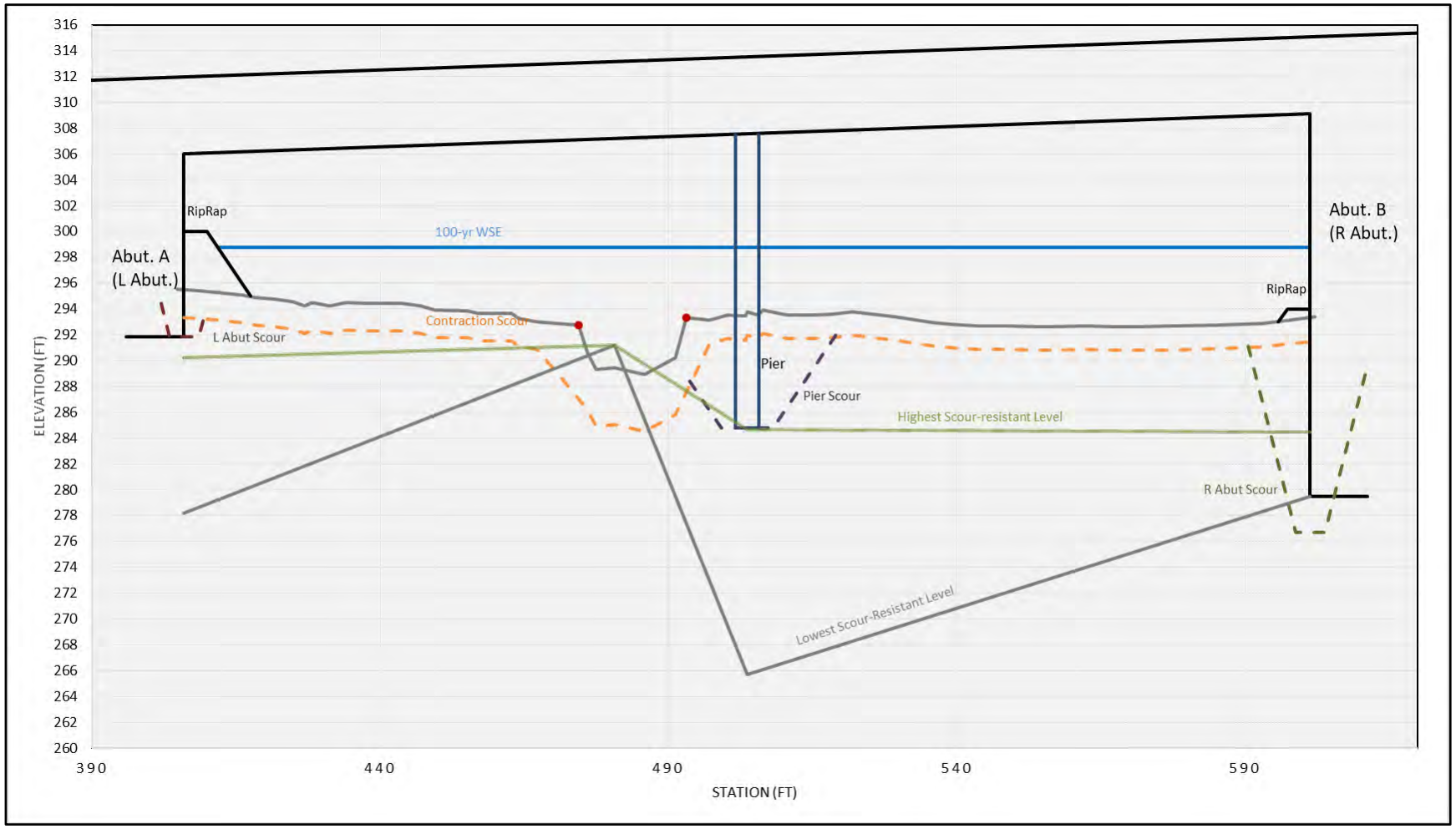

Figure 6. 100-year Scour Plot.

Received by VMRC September 1, 2020 /blh

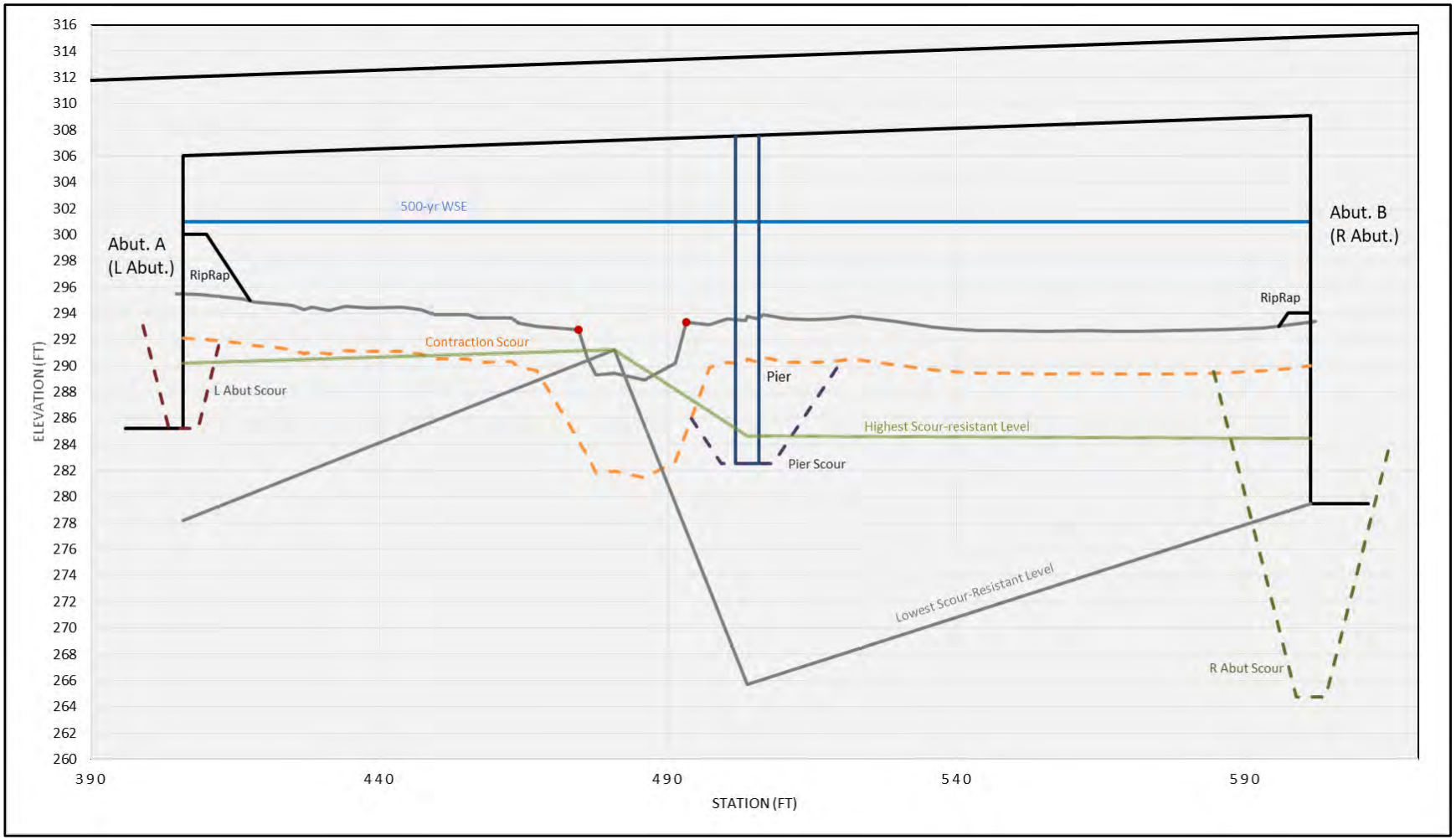

Figure 7. 500-year Scour Plot.

Received by VMRC September 1, 2020 /blh

References

FPAL-2020-0003, (2020) “Floodplain Alteration, Hartland North Fork Broad Run”, Submitted by Dewberry to Loudoun County.

Geotechnical Solutions Inc, (2020), “Subsurface Exploration and Geotechnical Recommendations”, Hartland Drive Public Improvements- Phase 1A and 1B, Loudoun County Virginia, December 23, 2019, Revised March 26, 2020.

HEC-18, “Evaluating Scour at Bridges”, Fifth Edition, Publication No. FHWA-HIF-12-003, Hydraulic Engineering Circular No. 18, Federal Highway Administration, U.S. Department of Transportation, April 2012.

Received by VMRC September 1, 2020 /blh

Appendix – A

Geotechical Data

Received by VMRC September 1, 2020 /blh

Geotechnical Solutions, Inc.

www.geotechnical-solutions.com

PROJECT: Hartland Drive Bridges **PROJECT NO.:** GP-192603-A
CLIENT: Timber Ridge at Hartland, LLC **BORING NO.:** NB-1
PROJECT LOCATION: Loudoun County, VA
LOCATION: North Bridge - North Abutment **ELEVATION:** 296.02 FT. MSL
DRILLER: Recon Drilling, Inc, (C. Gudiel) **LOGGED BY:** J. Kline
DRILLING METHOD: 3.25" I.D. HSA w/Autohammer & NQ Core Bit (Diedrich **DATE:** 11/15/2019
DEPTH TO - WATER> INITIAL: ▽ 4 ft. **AFTER 24 HOURS:** ▼ 4 ft. **CAVING>** C 5 ft.
GRID COORDINATES: N 7036926.61 **E** 11746812.38

This information pertains only to this boring and should not be interpreted as being indicitive of the site.

Depth/Elevation (feet)	Graphic	Description	USCS Class.	Sample No.	Blow Counts	Recovery (in.)	Moisture Content (%)	Liquid Limit	Plasticity Index	%<#200
0 / 295		2 inches of TOPSOIL (0.16)	TOPS							
		Alluvium - Brown SANDY LEAN CLAY, medium stiff, moist	CL	S1	2 3 3 3	21	23.1			
2.5 / 292.5		Residual - Red-brown SANDY LEAN CLAY, contains siltstone fragments, hard, moist (2.5)	CL	Bulk	4 9 30 41	60	13.7	36	17	66.8
				S2		24	13.0			
				S3	28 50/3"	8	11.4			
5		IGM - Highly weathered, moderately hard, medium bedded red-brown SILTSTONE (4.5)	IGM							
290		Slightly weathered, moderately hard, thin-bedded reddish brown argillaceous, indurated, cross-bedded and interbedded SILTSTONE and SANDSTONE, highly to intensely fractured, slightly rough, with <0.2 in. separation, hard wall rock, continuous at moderate to high angle, highly to intensely jointed, slightly rough with <0.2 in. separation, hard wall rock, continuous at low to moderate angle (5.8)	ROCK							
7.5 / 287.5				R1		47				
10 / 285		Core Run Length - 5 feet Recovery = 77.55% RQD = 34.8 = Poor Quality (10.8)			10.8-11.4 ft. - Rock Unconfined Compressive Strength - 10,910 psi					
12.5 / 282.5		Slightly weathered, moderately hard, thin-bedded reddish brown argillaceous, indurated, cross-bedded and interbedded SILTSTONE and SANDSTONE, highly to intensely fractured, slightly rough, with <0.2 in. separation, hard wall rock, continuous at moderate to high angle, highly jointed, slightly rough with no separation, hard wall rock, continuous at low to moderate angle		R2		60				
15 / 280										

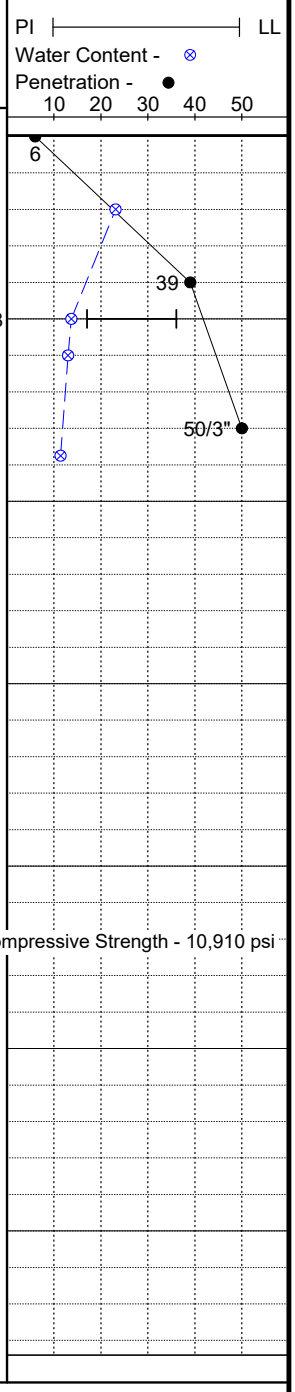

Boring backfilled after 24 hour water level observation.

Figure PAGE 1 of 2

Received by VMRC September 1, 2020 /blh

Geotechnical Solutions, Inc.

www.geotechnical-solutions.com

PROJECT: Hartland Drive Bridges **PROJECT NO.:** GP-192603-A
CLIENT: Timber Ridge at Hartland, LLC **BORING NO.:** NB-1
PROJECT LOCATION: Loudoun County, VA
LOCATION: North Bridge - North Abutment **ELEVATION:** 296.02 FT. MSL
DRILLER: Recon Drilling, Inc, (C. Gudiel) **LOGGED BY:** J. Kline
DRILLING METHOD: 3.25" I.D. HSA w/Autohammer & NQ Core Bit (Diedrich **DATE:** 11/15/2019
DEPTH TO - WATER> INITIAL: 4 ft. **AFTER 24 HOURS:** 4 ft. **CAVING>** 5 ft.
GRID COORDINATES: N 7036926.61 **E** 11746812.38

This information pertains only to this boring and should not be interpreted as being indicitive of the site.

Depth/Elevation (feet)	Graphic	Description	USCS Class.	Sample No.	Blow Counts	Recovery (in.)	Moisture Content (%)	Liquid Limit	Plasticity Index	%<#200	PI — LL; Water Content - ⊗; Penetration - ● (10 20 30 40 50)
17.5 / 277.5		Core Run Length - 5 feet Recovery = 96.7% RQD = 95.6 = Excellent Quality									
		15.8									
20 / 275		Slightly weathered, moderately hard, thin-bedded reddish brown argillaceous, indurated and interbedded SILTSTONE and SANDSTONE, highly to intensely fractured, slightly rough, with <0.05 in. separation, hard wall rock, continuous at moderate to high angle, highly to intensely jointed, slightly rough with no separation, hard wall rock, continuous at low to moderate angle		R3		59					
22.5 / 272.5		Core Run Length - 5 feet Recovery = 95.8% RQD = 91.5 = Excellent Quality		R4		60					
		20.8									
25 / 270		Slightly weathered, moderately hard, thin-bedded reddish brown argillaceous, indurated, cross-bedded and interbedded SILTSTONE and SANDSTONE, highly fractured, slightly rough, with <0.05 in. separation, hard wall rock, continuous at moderate to high angle, highly jointed, slightly rough with no separation, hard wall rock, continuous at low to moderate angle									
27.5 / 267.5		Core Run Length - 5 feet Recovery = 100.0% RQD = 90.0 = Excellent Quality									
30 / 265		Auger refusal at 5.8 feet. Rock core terminated at 25.8 feet.									
32.5											

Boring backfilled after 24 hour water level observation.

Received by VMRC September 1, 2020 /blh

Geotechnical Solutions, Inc.

www.geotechnical-solutions.com

PROJECT: Hartland Drive Bridges **PROJECT NO.:** GP-192603-A
CLIENT: Timber Ridge at Hartland, LLC **BORING NO.:** NB-2
PROJECT LOCATION: Loudoun County, VA
LOCATION: North Bridge - Central Pier **ELEVATION:** 293.67 ft. MSL
DRILLER: Recon Drilling, Inc, (C. Gudiel) **LOGGED BY:** J. Kline
DRILLING METHOD: 3.25" I.D. HSA w/Autohammer & NQ Core Bit (Diedrich **DATE:** 11/13/2019
DEPTH TO - WATER> INITIAL: 3 ft. **AFTER 24 HOURS:** 4 ft. **CAVING>** C 8 ft.
GRID COORDINATES: N 7036854.80 **E** 11746739.12

This information pertains only to this boring and should not be interpreted as being indicitive of the site.

Depth/Elevation (feet)	Description	USCS Class.	Sample No.	Blow Counts	Recovery (in.)	Moisture Content (%)	Liquid Limit	Plasticity Index	%<#200
0 / 292.5	1 inch of TOPSOIL (0.08)	TOPS							
	Alluvium - Brown SANDY LEAN CLAY, medium stiff, moist	CL	S1	3 4 4 4	24	27.5			
2.5 / 290	--- soft		Bulk	2 2 3 4	60	22.7	35	16	68.6
			S2		24	28.2			
5 / 287.5	Residual - Red-brown SANDY LEAN CLAY, contains siltstone fragments, medium stiff, moist (5.0)	CL	S3	4 4 6 5	24	22.6	45	25	63.9
			S4	10 16 50/3"	2	23.9			
7.5 / 285	IGM - Highly weathered, moderately hard, medium bedded red-brown SILTSTONE (7.0)	IGM	S5	50/1"	1	1.6			
10 / 282.5	Slightly weathered, moderately hard, thin-bedded reddish brown argillaceous indurated, cross-bedded and interbedded SILTSTONE and SANDSTONE, highly to intensely fractured, slightly rough, with >0.2 in. separation, hard wall rock, continuous at moderate to high angle, highly to intensely jointed, slightly rough with <0.2 in. separation, hard wall rock, continuous at low to moderate angle Mud seam from 9.2 to 11.3 feet (9.0)	ROCK	R1		31				
12.5 / 280	Core Run Length - 5 feet Recovery = 48.3% RQD = 37.1 = Poor Quality			14.9-15.6 ft. - Rock Unconfined Compressive Strength - 3,850 psi					
15 / 277.5	Slightly weathered, moderately hard, thin-bedded reddish brown (14.0)		R2		60				

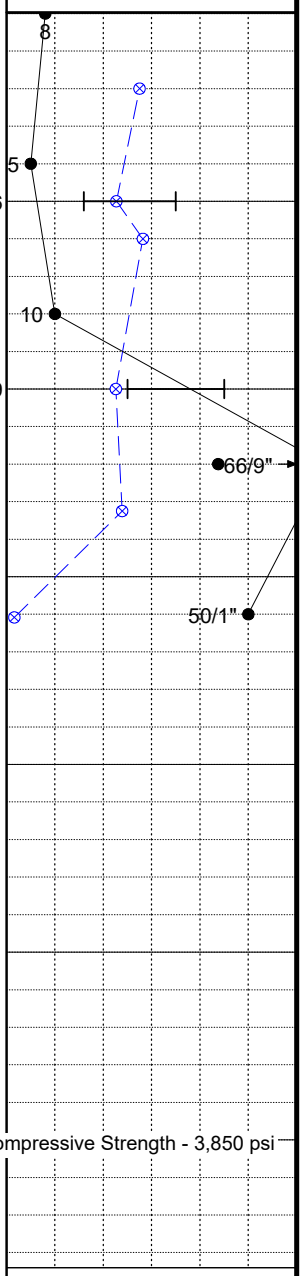

Boring backfilled after 24 hour water level observation.

Figure PAGE 1 of 2

Received by VMRC September 1, 2020 /blh

Geotechnical Solutions, Inc.

www.geotechnical-solutions.com

PROJECT: Hartland Drive Bridges **PROJECT NO.:** GP-192603-A
CLIENT: Timber Ridge at Hartland, LLC **BORING NO.:** NB-2
PROJECT LOCATION: Loudoun County, VA
LOCATION: North Bridge - Central Pier **ELEVATION:** 293.67 ft. MSL
DRILLER: Recon Drilling, Inc, (C. Gudiel) **LOGGED BY:** J. Kline
DRILLING METHOD: 3.25" I.D. HSA w/Autohammer & NQ Core Bit (Diedrich **DATE:** 11/13/2019
DEPTH TO - WATER> INITIAL: 3 ft. **AFTER 24 HOURS:** 4 ft. **CAVING>** 8 ft.
GRID COORDINATES: N 7036854.80 **E** 11746739.12

This information pertains only to this boring and should not be interpreted as being indicitive of the site.

Depth/Elevation (feet)	Graphic	Description	USCS Class.	Sample No.	Blow Counts	Recovery (in.)	Moisture Content (%)	Liquid Limit	Plasticity Index	%<#200	PI — LL; Water Content - ⊗; Penetration - ● (10 20 30 40 50)
17.5 / 275		argillaceous indurated, cross-bedded and interbedded SILTSTONE and SANDSTONE, highly to intensely fractured, slightly rough, with <0.2 in. separation, hard wall rock, continuous at moderate to high angle, highly jointed, slightly rough with no separation, hard wall rock, continuous at low to moderate angle , Core Run Length - 5 feet Recovery = 100.0% RQD = 90.8 = Excellent Quality									
20 / 272.5		19.0 Slightly weathered, moderately hard, thin-bedded reddish brown argillaceous and indurated SILTSTONE, moderately to highly fractured, slightly rough, with <0.05 in. separation, hard wall rock, continuous at moderate to high angle, highly jointed, slightly rough with no separation, hard wall rock, continuous at low to moderate angle Core Run Length - 5 feet Recovery = 100.0% RQD = 93.75 = Excellent Quality		R3		60					
22.5 / 270											
25 / 267.5		24.0 Slightly weathered, moderately hard, thin-bedded reddish brown argillaceous and indurated SILTSTONE, highly fractured, slightly rough, with <0.05 in. separation, hard wall rock, continuous at moderate to high angle, highly jointed, slightly rough with no separation, hard wall rock, continuous at low to moderate angle Core Run Length - 5 feet Recovery = 100.0% RQD = 93.5 = Excellent Quality		R4		60					
27.5 / 265											
30 / 262.5											
32.5		Auger refusal at 9 feet. Rock core terminated at 29 feet.									

Boring backfilled after 24 hour water level observation.

Received by VMRC September 1, 2020 /blh

Geotechnical Solutions, Inc.

www.geotechnical-solutions.com

PROJECT: Hartland Drive Bridges **PROJECT NO.:** GP-192603-A
CLIENT: Timber Ridge at Hartland, LLC **BORING NO.:** NB-3
PROJECT LOCATION: Loudoun County, VA
LOCATION: North Bridge - South Abutment **ELEVATION:** 292.48 ft. MSL
DRILLER: Recon Drilling, Inc, (C. Gudiel) **LOGGED BY:** J. Kline
DRILLING METHOD: 3.25" I.D. HSA w/Autohammer & NQ Core Bit (Diedrich **DATE:** 11/14/2019
DEPTH TO - WATER> INITIAL: 3 ft. **AFTER 24 HOURS:** 3 ft. **CAVING>** C 8 ft.
GRID COORDINATES: N 7036783.60 **E** 11746665.47

This information pertains only to this boring and should not be interpreted as being indicitive of the site.

Depth/Elevation (feet)	Graphic	Description	USCS Class.	Sample No.	Blow Counts	Recovery (in.)	Moisture Content (%)	Liquid Limit	Plasticity Index	%<#200
0		2 inches of TOPSOIL (0.16)	TOPS							
		Alluvium - Brown SANDY LEAN CLAY, very soft, moist	CL	S1	2 1 1 1	6	30.3			
2.5 / 290				S2	1 1 1 1	18	29.6			
5 / 287.5		Residual - Red-brown SANDY LEAN CLAY, contains siltstone fragments, medium stiff, moist (5.0)	CL	S3	1 2 9 6	24	15.8			
				S4	24 50/1"	6	14.5			
		IGM - Highly weathered, moderately hard, medium bedded red-brown SILTSTONE (6.5)	IGM							
7.5 / 285		Slightly weathered, moderately hard, thin-bedded reddish brown argillaceous indurated, cross-bedded and interbedded SILTSTONE and SANDSTONE, highly to intensely fractured, slightly rough, with <0.05 in. separation, hard wall rock, continuous at moderate to high angle, highly to intensely jointed, slightly rough with no separation, hard wall rock, continuous at low to moderate angle (8.0)	ROCK	S5	50/0"	NR				
10 / 282.5				R1		48				
12.5 / 280		Mud seam from 10.45 to 11.6 feet Core Run Length - 5 feet Recovery = 73.3% RQD = 35.0 = Poor Quality (13.0)								
15 / 277.5		Slightly weathered, moderately hard, thin-bedded reddish brown argillaceous indurated and interbedded SILTSTONE and SANDSTONE, highly to intensely		R2		60				

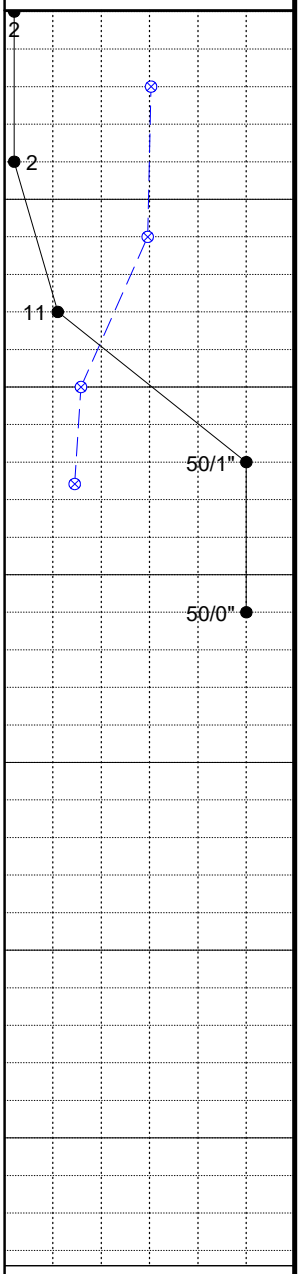

Boring backfilled after 24 hour water level observation.

Figure PAGE 1 of 2

Received by VMRC September 1, 2020 /blh

Geotechnical Solutions, Inc.

www.geotechnical-solutions.com

PROJECT: Hartland Drive Bridges **PROJECT NO.:** GP-192603-A
CLIENT: Timber Ridge at Hartland, LLC **BORING NO.:** NB-3
PROJECT LOCATION: Loudoun County, VA
LOCATION: North Bridge - South Abutment **ELEVATION:** 292.48 ft. MSL
DRILLER: Recon Drilling, Inc, (C. Gudiel) **LOGGED BY:** J. Kline
DRILLING METHOD: 3.25" I.D. HSA w/Autohammer & NQ Core Bit (Diedrich **DATE:** 11/14/2019
DEPTH TO - WATER> INITIAL: 3 ft. **AFTER 24 HOURS:** 3 ft. **CAVING>** 8 ft.
GRID COORDINATES: N 7036783.60 **E** 11746665.47

This information pertains only to this boring and should not be interpreted as being indicitive of the site.

Depth/Elevation (feet)	Graphic	Description	USCS Class.	Sample No.	Blow Counts	Recovery (in.)	Moisture Content (%)	Liquid Limit	Plasticity Index	%<#200	PI — LL; Water Content - ⊗; Penetration - ● (10 20 30 40 50)
17.5 — 275		fractured, slightly rough, with <0.05 in. separation, hard wall rock, continuous at moderate to high angle, highly to intensely jointed, slightly rough with <0.2 in. separation, hard wall rock, continuous at low to moderate angle Core Run Length - 5 feet Recovery = 92.5% RQD = 73.75 = Fair Quality			17.0-17.55 ft. - Rock Unconfined Compressive Strength - 3,490 psi						
20 — 272.5		18.0		R3		60					
		Slightly weathered, moderately hard, thin-bedded reddish brown argillaceous and indurated SILTSTONE, highly to intensely fractured, slightly rough, with <0.05 in. separation, hard wall rock, continuous at moderate to high angle, highly to intensely jointed, slightly rough with <0.2 in. separation, hard wall rock, continuous at low to moderate angle Core Run Length - 5 feet Recovery = 98.3% RQD = 70.4 = Fair Quality								
22.5 — 270											
25 — 267.5		23.0		R4		60					
		Slightly weathered, moderately hard, thin-bedded reddish brown argillaceous and indurated SILTSTONE, moderately to highly fractured, slightly rough, with <0.2 in. separation, hard wall rock, continuous at moderate to high angle, moderately to intensely jointed, slightly rough with <0.2 in. separation, hard wall rock, continuous at low to moderate angle Core Run Length - 5 feet Recovery = 98.3% RQD = 88.3 = Good Quality								
27.5 — 265											
30 — 262.5											
32.5 — 260		Auger refusal at 8 feet. Rock core terminated at 28 feet.									

Boring backfilled after 24 hour water level observation.

Received by VMRC September 1, 2020 /blh

Geotechnical Solutions, Inc.

www.geotechnical-solutions.com

PROJECT: Hartland Drive Bridges **PROJECT NO.:** GP-192603-A
CLIENT: Timber Ridge at Hartland, LLC **BORING NO.:** NB-4
PROJECT LOCATION: Loudoun County, VA
LOCATION: North Bridge - South Abutment **ELEVATION:** 292.63 ft. MSL
DRILLER: Recon Drilling, Inc, (C. Gudiel) **LOGGED BY:** J. Kline
DRILLING METHOD: 3.25" I.D. HSA w/Autohammer & NQ Core Bit (Diedrich **DATE:** 11/15/2019
DEPTH TO - WATER> INITIAL: 3 ft. **AFTER 24 HOURS:** 3 ft. **CAVING>** C 4.5
GRID COORDINATES: N 7036750.41 **E** 11746697.85

This information pertains only to this boring and should not be interpreted as being indicitive of the site.

Depth/Elevation (feet)	Graphic	Description	USCS Class.	Sample No.	Blow Counts	Recovery (in.)	Moisture Content (%)	Liquid Limit	Plasticity Index	%<#200
0 / 292.5		2 inches of TOPSOIL (0.16)	TOPS							
		Alluvium - Brown SANDY LEAN CLAY, very soft, moist	CL	S1	1 1 1 2	8	20.2	32	10	64.6
2.5 / 290				S2	2 2 1 2	8	28.7			
5 / 287.5		Residual - Red-brown SANDY LEAN CLAY, contains siltstone fragments, medium stiff, moist (5.0)	CL	S3	2 3 3 15	24	23.3			
		IGM - Highly weathered, moderately hard, medium bedded red-brown SILTSTONE (6.0)	IGM	S4	50/6"	6	19.2			
7.5 / 285				S5	50/1"	1	7.3			
10 / 282.5		Slightly weathered, moderately hard, thin-bedded reddish brown argillaceous indurated, cross-bedded and interbedded SILTSTONE and SANDSTONE, highly to intensely fractured, slightly rough, with <0.2 in. separation, hard wall rock, continuous at moderate to high angle, highly to intensely jointed, slightly rough with <0.2 in. separation, hard wall rock, continuous at low to moderate angle (8.5)	ROCK	R1		58				
12.5 / 280		Core Run Length - 5 feet Recovery = 91.7% RQD = 59.8 = Fair Quality (13.5)								
15 / 277.5		Slightly weathered, moderately hard, thin-bedded reddish brown argillaceous indurated, cross-bedded and interbedded SILTSTONE and SANDSTONE, highly fractured,		R2		58				

9.65-10.2 ft. - Rock Unconfined Compressive Strength - 8,790 psi

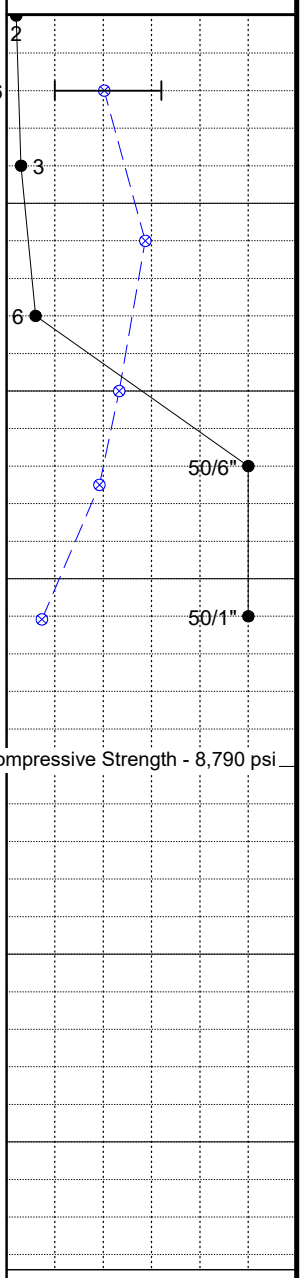

Boring backfilled after 24 hour water level observation.

Received by VMRC September 1, 2020 /blh

Geotechnical Solutions, Inc.

www.geotechnical-solutions.com

PROJECT: Hartland Drive Bridges **PROJECT NO.:** GP-192603-A
CLIENT: Timber Ridge at Hartland, LLC **BORING NO.:** NB-4
PROJECT LOCATION: Loudoun County, VA
LOCATION: North Bridge - South Abutment **ELEVATION:** 292.63 ft. MSL
DRILLER: Recon Drilling, Inc, (C. Gudiel) **LOGGED BY:** J. Kline
DRILLING METHOD: 3.25" I.D. HSA w/Autohammer & NQ Core Bit (Diedrich **DATE:** 11/15/2019
DEPTH TO - WATER> INITIAL: 3 ft. **AFTER 24 HOURS:** 3 ft. **CAVING>** 4.5
GRID COORDINATES: N 7036750.41 **E** 11746697.85

This information pertains only to this boring and should not be interpreted as being indicitive of the site.

Depth/Elevation (feet)	Graphic	Description	USCS Class.	Sample No.	Blow Counts	Recovery (in.)	Moisture Content (%)	Liquid Limit	Plasticity Index	%<#200	PI — LL; Water Content - ⊗; Penetration - ● (10 20 30 40 50)
17.5 / 275		slightly rough, with <0.2 in. separation, hard wall rock, continuous at moderate to high angle, highly jointed, slightly rough with <0.2 in. separation, hard wall rock, continuous at low to moderate angle Core Run Length - 5 feet Recovery = 94.2% RQD = 86.25 = Good Quality									
20 / 272.5		18.5 Slightly weathered, moderately hard, thin-bedded reddish brown argillaceous indurated, cross-bedded and interbedded SILTSTONE and SANDSTONE, highly fractured, slightly rough, with <0.05 in. separation, hard wall rock, continuous at moderate to high angle, highly jointed, slightly rough with no separation, hard wall rock, continuous at low to moderate angle Core Run Length - 5 feet Recovery = 98.3% RQD = 98.3 = Excellent Quality		R3		60					
22.5 / 270											
25 / 267.5		23.5 Slightly weathered, moderately hard, thin-bedded reddish brown argillaceous indurated SILTSTONE, moderately to highly fractured, slightly rough, with no separation, hard wall rock, continuous at moderate to high angle, moderately to highly jointed, slightly rough with no separation, hard wall rock, continuous at low to moderate angle Core Run Length - 5 feet Recovery = 100.0% RQD = 100.0 = Excellent Quality		R4		60					
27.5 / 265											
30 / 262.5		Auger refusal at 8.5 feet. Rock core terminated at 28.5 feet.									
32.5 / 260											

Boring backfilled after 24 hour water level observation.

Received by VMRC September 1, 2020 /blh

Geotechnical Solutions, Inc.

www.geotechnical-solutions.com

PROJECT: Hartland Drive Bridges **PROJECT NO.:** GP-192603-A
CLIENT: Timber Ridge at Hartland, LLC **BORING NO.:** NB-5
PROJECT LOCATION: Loudoun County, VA
LOCATION: North Bridge - Upstream Stream Channel **ELEVATION:** 293.32 ft.
DRILLER: Recon Drilling, Inc, (C. Gudiel) **LOGGED BY:** J. Kline
DRILLING METHOD: 3.25" I.D. HSA w/Autohammer & NQ Core Bit (Diedrich **DATE:** 11/14/2019
DEPTH TO - WATER> INITIAL: 0 ft. **AFTER 24 HOURS:** 0 ft. **CAVING>** C 3 ft.
GRID COORDINATES: N 7036887.44 **E** 11746757.09

This information pertains only to this boring and should not be interpreted as being indicitive of the site.

Depth/Elevation (feet)	Graphic	Description	USCS Class.	Sample No.	Blow Counts	Recovery (in.)	Moisture Content (%)	Liquid Limit	Plasticity Index	%<#200
0 / 292.5		Alluvium - Brown CLAYEY SAND WITH GRAVEL, loose, moist	SC	S1 Bulk	3 3 2 5	17 24	24.7 22.1	35	15	41.0
2.0		IGM - Highly weathered, moderately hard, medium bedded red-brown SILTSTONE	IGM ROCK	S2	50/1"	1	11.8			
2.1		Slightly weathered, moderately hard, thin-bedded grayish red argillaceous indurated, cross-bedded and interbedded SILTSTONE and SANDSTONE, moderately to highly fractured, slightly rough, with >0.2 in. separation, hard wall rock, continuous at moderate to high angle, moderately to highly jointed, slightly rough with no separation, hard wall rock, continuous at low to moderate angle Mud seam from 5.3 to 5.8 feet Core Run Length - 5 feet Recovery = 88.3% RQD = 81.5 = Good Quality		R1		53				
7.1		Slightly weathered, moderately hard, thin-bedded reddish brown argillaceous indurated, cross-bedded and interbedded SILTSTONE and SANDSTONE, highly to intensely fractured, slightly rough, with <0.05 in. separation, hard wall rock, continuous at moderate to high angle, highly to intensely jointed, slightly rough with <0.2 in. separation, hard wall rock, continuous at low to moderate angle Core Run Length - 5 feet Recovery = 95.0% RQD = 78.3 = Good Quality		R2		60				
12.1 / 277.5		Auger refusal at 2.1 feet. Rock core terminated at 12.1 feet.								

2.1-3.15 ft. - Rock Unconfined Compressive Strength - 25,230 psi
21,390 psi

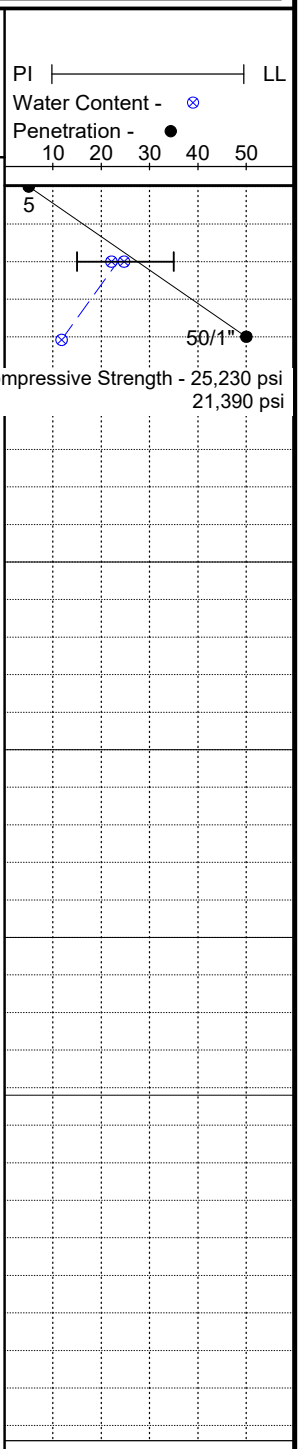

Boring backfilled after 24 hour water level observation.

Figure PAGE 1 of 1

Received by VMRC September 1, 2020 /blh

Geotechnical Solutions, Inc.

www.geotechnical-solutions.com

PROJECT: Hartland Drive Bridges **PROJECT NO.:** GP-192603

CLIENT: Willowsford Operations, LLC c/o Willowsford Management, **BORING NO.:** BR-1

PROJECT LOCATION:

LOCATION: Hartland Drive Station 74+50, CL **ELEVATION:** 296.7 ft. MSL

DRILLER: Recon Drilling, Inc. (A. Espinoza) **LOGGED BY:** J. Kline

DRILLING METHOD: 3.25" I.D. HSA w/Autohammer & NQ Core Bit (CME 550 ATV **DATE:** 05/20/2019

DEPTH TO WATER> INITIAL: ▽ 13.5 ft. **AFTER 24 HOURS:** ▼ 5 ft. **CAVING>** ⌒ 19 ft.

This information pertains only to this boring and should not be interpreted as being indicitive of the site.

Depth/Elevation (feet)	Description	USCS Class.	Sample No.	Blow Counts	Recovery (in.)	Moisture Content (%)	Liquid Limit	Plasticity Index	%<#200
0	3 inches of TOPSOIL	TOPS							
0.25	Brown, moist, medium stiff sandy Lean CLAY	CL	S1	2 3 4 7	24	19.1			
2.0	Brown, moist, stiff Elastic SILT with sand	MH	S2	4 5 7 8	24				
4.5	Reddish brown, moist, very hard Weathered ROCK (Siltstone)	IGM	S3	15 50/4"	10				
			S4	50/4"	4				
			S5	50/1"	1				
			S6	7 8 10	18				
18.5	Slightly weathered, moderately hard, thin-bedded reddish brown indurated and interbedded, SILTSTONE and SANDSTONE, highly fractured,	ROCK	S7	50/0"	NR				

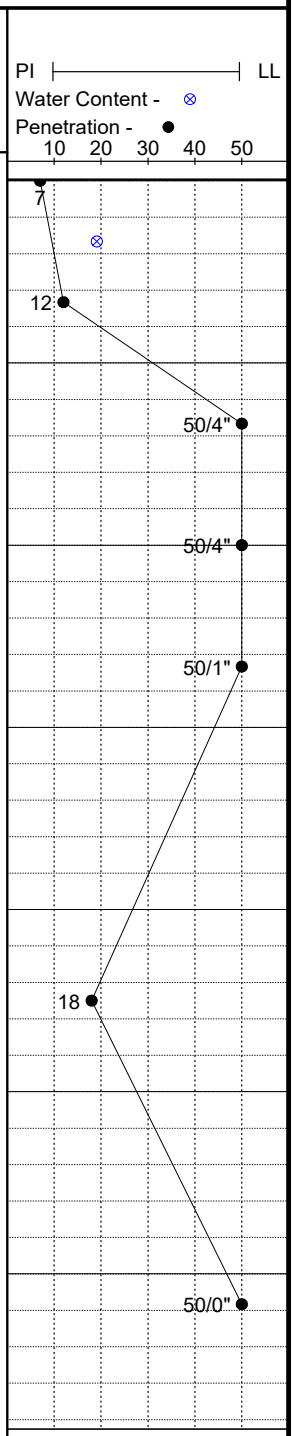

Boring backfilled after 24-hour water observations.

Received by VMRC September 1, 2020 /blh

Geotechnical Solutions, Inc.

www.geotechnical-solutions.com

PROJECT: Hartland Drive Bridges **PROJECT NO.:** GP-192603

CLIENT: Willowsford Operations, LLC c/o Willowsford Management, **BORING NO.:** BR-1

PROJECT LOCATION:

LOCATION: Hartland Drive Station 74+50, CL **ELEVATION:** 296.7 ft. MSL

DRILLER: Recon Drilling, Inc. (A. Espinoza) **LOGGED BY:** J. Kline

DRILLING METHOD: 3.25" I.D. HSA w/Autohammer & NQ Core Bit (CME 550 ATV **DATE:** 05/20/2019

DEPTH TO WATER> INITIAL: ▽ 13.5 ft. **AFTER 24 HOURS:** ▼ 5 ft. **CAVING>** C 19 ft.

This information pertains only to this boring and should not be interpreted as being indicitive of the site.

Depth/Elevation (feet)	Graphic	Description	USCS Class.	Sample No.	Blow Counts	Recovery (in.)	Moisture Content (%)	Liquid Limit	Plasticity Index	%<#200	PI — LL; Water Content - ⊗; Penetration - ● (10 20 30 40 50)
21 / 276		slightly rough, with <0.2 in. separation, partially calcite-filled, hard wall rock, continuous at low to high angle, Core Run Length - 5 feet Recovery - 100% RQD = 98.3 = Excellent Quality		R1		60					
24 / 273		23.5 Slightly weathered, moderately hard, thin-bedded reddish brown indurated and interbedded, STONE, in and SANDSTONEtensely to highly fractured, slightly rough, with <0.2 in. separation, partially calcite-filled, hard wall rock, continuous at low to high angle, Core Run Length - 5 feet Recovery - 96.7100% RQD = 71.3 = Fair Quality		R2		60					25.1-26.1 ft. - Rock Unconfined Compressive Strength - 4,770 psi
27 / 270											
30 / 267		28.5 Slightly weathered, moderately hard, thin-bedded reddish brown indurated, argillaceous and vuggy, SILTSTONEE, highly fractured, slightly rough, with <0.2 in. separation, partially calcite-filled, hard wall rock, continuous at low to high angle, Core Run Length - 5 feet Recovery - 96.7% RQD = 73.3 = Fairt Quality		R3		60					
33 / 264											
36 / 261		33.5 Slightly weathered, moderately hard, thin-bedded reddish brown and gray indurated and interbedded, SILTSTONE and SANDSTONE, intensely to highly fractured, slightly rough, with <0.2 in. separation, partially calcite-filled, hard wall rock, continuous at low to high angle, Core Run Length - 5 feet Recovery - 96.7% RQD = 70.4 = Fair Quality		R4		60					
39 / 258		Auger refusal at 18.5 feet, rock core									

Boring backfilled after 24-hour water observations.

Received by VMRC September 1, 2020 /blh

Geotechnical Solutions, Inc.

www.geotechnical-solutions.com

PROJECT: Hartland Drive Bridges **PROJECT NO.:** GP-192603

CLIENT: Willowsford Operations, LLC c/o Willowsford Management, **BORING NO.:** BR-1

PROJECT LOCATION:

LOCATION: Hartland Drive Station 74+50, CL **ELEVATION:** 296.7 ft. MSL

DRILLER: Recon Drilling, Inc. (A. Espinoza) **LOGGED BY:** J. Kline

DRILLING METHOD: 3.25" I.D. HSA w/Autohammer & NQ Core Bit (CME 550 ATV **DATE:** 05/20/2019

DEPTH TO WATER> INITIAL: ▽ 13.5 ft. **AFTER 24 HOURS:** ▼ 5 ft. **CAVING>** ⌒ 19 ft.

This information pertains only to this boring and should not be interpreted as being indicitive of the site.

Depth/Elevation (feet)	Graphic	Description	USCS Class.	Sample No.	Blow Counts	Recovery (in.)	Moisture Content (%)	Liquid Limit	Plasticity Index	%<#200	PI — LL; Water Content - ⊗; Penetration - ● (10 20 30 40 50)
42 / 255		terminated at 38.5 feet.									
45 / 252											
48 / 249											
51 / 246											
54 / 243											
57 / 240											
60 / 237											

Boring backfilled after 24-hour water observations.

Received by VMRC September 1, 2020 /blh

Geotechnical Solutions, Inc.

www.geotechnical-solutions.com

PROJECT: Hartland Drive Bridges **PROJECT NO.:** GP-192603

CLIENT: Willowsford Operations, LLC c/o Willowsford Management, **BORING NO.:** BR-2

PROJECT LOCATION:

LOCATION: Hartland Drive Station 75+58, CL **ELEVATION:** 293.7 ft. MSL

DRILLER: Recon Drilling, Inc. (A. Espinoza) **LOGGED BY:** J. Kline

DRILLING METHOD: 3.25" I.D. HSA w/Autohammer & NQ Core Bit (CME 550 **DATE:** 05/15/2019

DEPTH TO WATER> INITIAL: ▽ 5.5 ft. **AFTER 24 HOURS:** ▼ 2 ft. **CAVING>** ⌒ 17 ft.

This information pertains only to this boring and should not be interpreted as being indicitive of the site.

Depth/Elevation (feet)	Description	USCS Class.	Sample No.	Blow Counts	Recovery (in.)	Moisture Content (%)	Liquid Limit	Plasticity Index	%<#200
0	2 inches of TOPSOIL (0.16)	TOPS							
	Brown, moist, soft to very soft Lean CLAY with sand (Alluvium)	CL	S1	2 2 2 2	20	28.2			
	Brown lean CLAY								
291 / 3			S2	1 2 1 2	24	29.5	33	14	89.6
			S3	WOH 6 50	10	10.0			
	Reddish brown, moist, hard Weathered ROCK (Siltstone) (5.0)	IGM							
288 / 6			S4	50/3"	2	7.2			
			S5	50/1"	1	6.7			
285 / 9									
282 / 12									
			S6	50/1"	1	6.8			
279 / 15									
276 / 18			S7	50/1"	1	6.3			

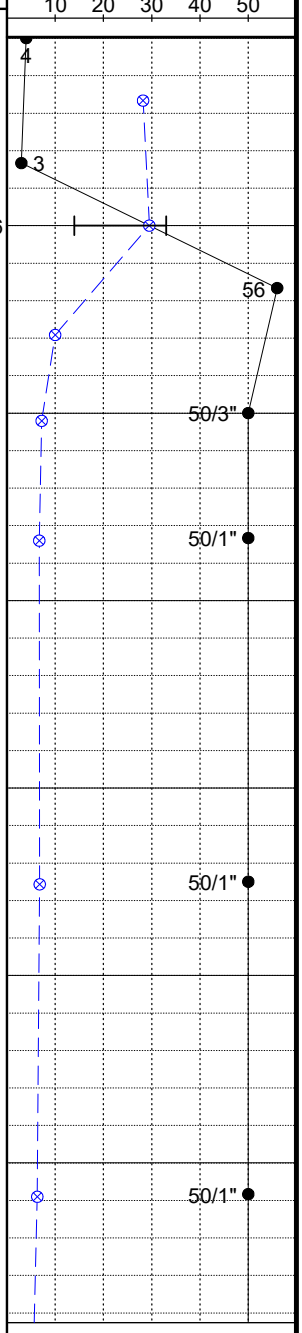

Boring backfilled after 24-hour water observations.

Received by VMRC September 1, 2020 /blh

Geotechnical Solutions, Inc.

www.geotechnical-solutions.com

PROJECT: Hartland Drive Bridges **PROJECT NO.:** GP-192603
CLIENT: Willowsford Operations, LLC c/o Willowsford Management, **BORING NO.:** BR-2
PROJECT LOCATION:
LOCATION: Hartland Drive Station 75+58, CL **ELEVATION:** 293.7 ft. MSL
DRILLER: Recon Drilling, Inc. (A. Espinoza) **LOGGED BY:** J. Kline
DRILLING METHOD: 3.25" I.D. HSA w/Autohammer & NQ Core Bit (CME 550 **DATE:** 05/15/2019
DEPTH TO WATER> INITIAL: 5.5 ft. **AFTER 24 HOURS:** 2 ft. **CAVING>** 17 ft.

This information pertains only to this boring and should not be interpreted as being indicitive of the site.

Depth/Elevation (feet)	Graphic	Description	USCS Class.	Sample No.	Blow Counts	Recovery (in.)	Moisture Content (%)	Liquid Limit	Plasticity Index	%<#200	PI — LL; Water Content - ⊗; Penetration - ● (10 20 30 40 50)
273 / 21											
270 / 24				S8	50/1"	1	4.7				50/1"
267 / 27											
		28.0	ROCK	S9	50/0"	NR					50/0"
264 / 30		Slightly weathered, moderately hard, thin-bedded reddish brown and gray indurated and argillaceous, SANDSTONE, moderately fractured, slightly rough, with <0.2 in. separation, partially calcite-filled, hard wall rock, continuous at low to moderate angle, Core Run Length - 5 feet Recovery - 100% RQD = 82.7 = Good Quality		R1		60					
		30.7-31.4 ft. - Rock Unconfined Compressive Strength - 23,950 psi									
261 / 33		33.0									
258 / 36		Slightly weathered, moderately hard, thin-bedded reddish brown indurated, argillaceous, and interbedded, SILTSTONE and SANDSTONE, moderately fractured, slightly rough, with <0.2 in. separation, partially calcite-filled, hard wall rock, continuous at low angle, Core Run Length - 5 feet Recovery - 100% RQD = 100.0 = Excellent Quality		R2		60					
255 / 39		38.0									
		Slightly weathered, moderately hard, thin-bedded reddish brown indurated and argillaceous, SILTSTONE, intensely to moderately fractured,		R3		60					

Boring backfilled after 24-hour water observations.

Received by VMRC September 1, 2020 /blh

Geotechnical Solutions, Inc.

www.geotechnical-solutions.com

PROJECT: Hartland Drive Bridges **PROJECT NO.:** GP-192603
CLIENT: Willowsford Operations, LLC c/o Willowsford Management, **BORING NO.:** BR-2
PROJECT LOCATION:
LOCATION: Hartland Drive Station 75+58, CL **ELEVATION:** 293.7 ft. MSL
DRILLER: Recon Drilling, Inc. (A. Espinoza) **LOGGED BY:** J. Kline
DRILLING METHOD: 3.25" I.D. HSA w/Autohammer & NQ Core Bit (CME 550 **DATE:** 05/15/2019
DEPTH TO WATER> INITIAL: 5.5 ft. **AFTER 24 HOURS:** 2 ft. **CAVING>** 17 ft.

This information pertains only to this boring and should not be interpreted as being indicitive of the site.

Depth/Elevation (feet)	Graphic	Description	USCS Class.	Sample No.	Blow Counts	Recovery (in.)	Moisture Content (%)	Liquid Limit	Plasticity Index	%<#200	PI — LL; Water Content - ⊗; Penetration - ● (10 20 30 40 50)
42 / 252		slightly rough, with <0.2 in. separation, partially calcite-filled, hard wall rock, continuous at low to moderate angle, Core Run Length - 5 feet Recovery - 100% RQD = 81.0 = Good Quality									
43.0											
45 / 249		Slightly weathered, moderately hard, thin-bedded reddish brown indurated and argillaceous, SILTSTONE, highly to moderately fractured, slightly rough, with <0.2 in. separation, partially calcite-filled, hard wall rock, continuous at low to moderate angle, Core Run Length - 5 feet Recovery - 100% RQD = 96.4 = Excellent Quality		R4		60					
48 / 246											
51 / 243		Auger refusal at 28 feet, rock core terminated at 48 feet.									
54 / 240											
57 / 237											
60 / 234											

Boring backfilled after 24-hour water observations.

Received by VMRC September 1, 2020 /blh

Particle Size Distribution Report

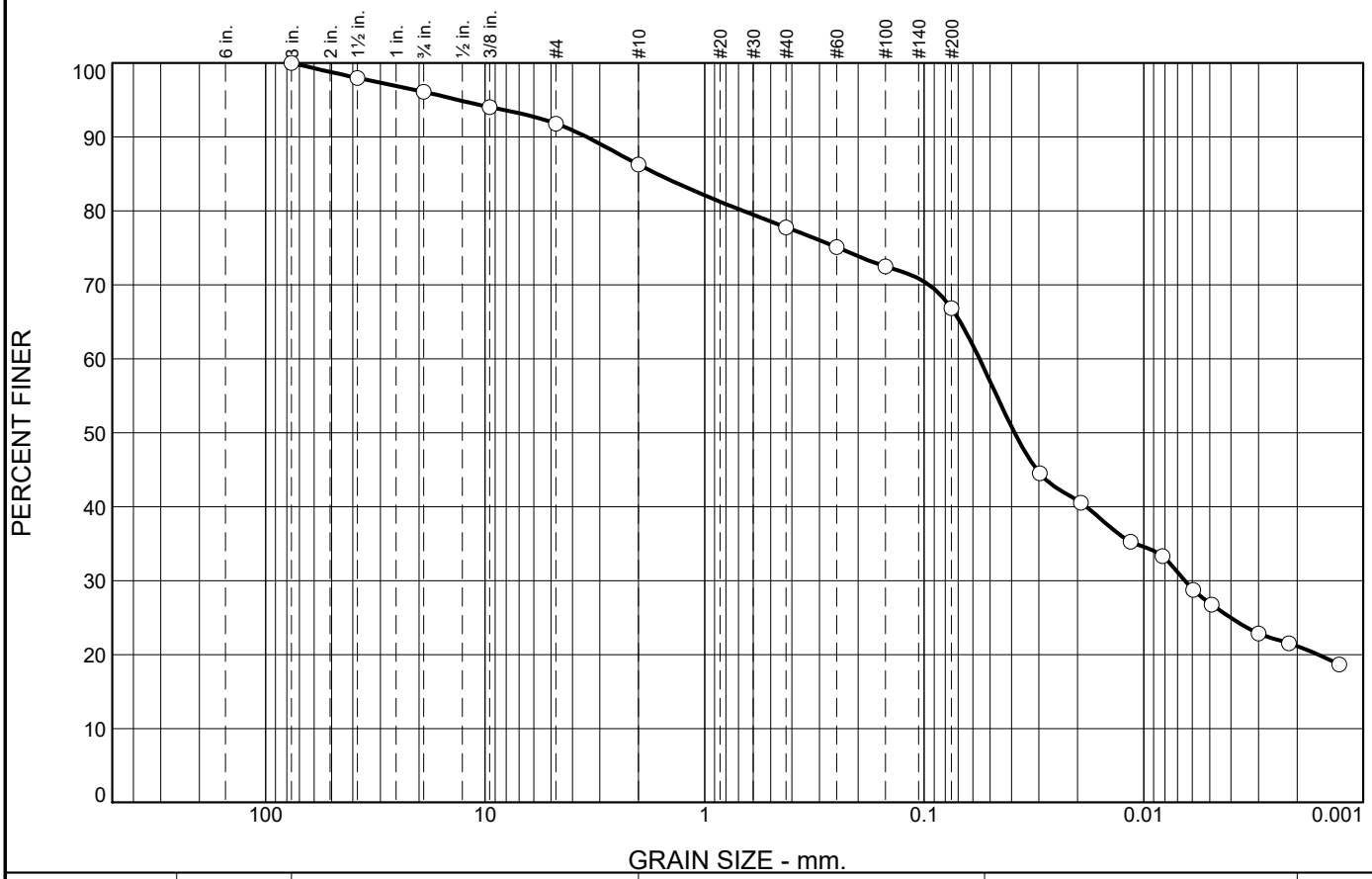

% Stones	% +3"	% Gravel			% Sand					% Silt		% Clay
		Coarse	Medium	Fine	V. Crs.	Crs.	Med.	Fine	V. Fine	Crs.	Fine	
0.0	0.0	3.9	4.3	5.5	4.2	3.5	3.5	4.7	11.9	17.7	19.6	21.2

SIEVE SIZE	PERCENT FINER	SPEC.* PERCENT	PASS? (X=NO)
3.0	100.0		
1.5	98.0		
0.75	96.1		
0.375	94.0		
#4	91.8		
#10	86.3		
#40	77.8		
#60	75.1		
#100	72.5		
#200	66.8		
0.0297 mm.	44.5		
0.0193 mm.	40.5		
0.0115 mm.	35.3		
0.0082 mm.	33.3		
0.0059 mm.	28.7		
0.0049 mm.	26.8		
0.0030 mm.	22.8		
0.0022 mm.	21.5		
0.0013 mm.	18.7		

* (no specification provided)

Soil Description

Reddish brown sandy lean CLAY

Atterberg Limits

PL= 19 LL= 36 PI= 17

Coefficients

D_{90}= 3.4568 D_{85}= 1.6479 D_{60}= 0.0559
D_{50}= 0.0388 D_{30}= 0.0065 D_{15}=
D_{10}= C_u= C_c=

Classification

USCS= CL AASHTO= A-6(9)

Remarks

Natural moisture content = 13.7%

Source of Sample: NB-1 **Depth:** 0-5'
Sample Number: Bulk **Date:** 12-5-2019

Geotechnical Solutions, Inc.
Chantilly, Virginia

Client: Timber Ridge at Hartland, LLC
Project: Hartland Drive Bridges
Project No: GP-192603-A **Figure**

Received by VMRC September 1, 2020 /blh

Particle Size Distribution Report

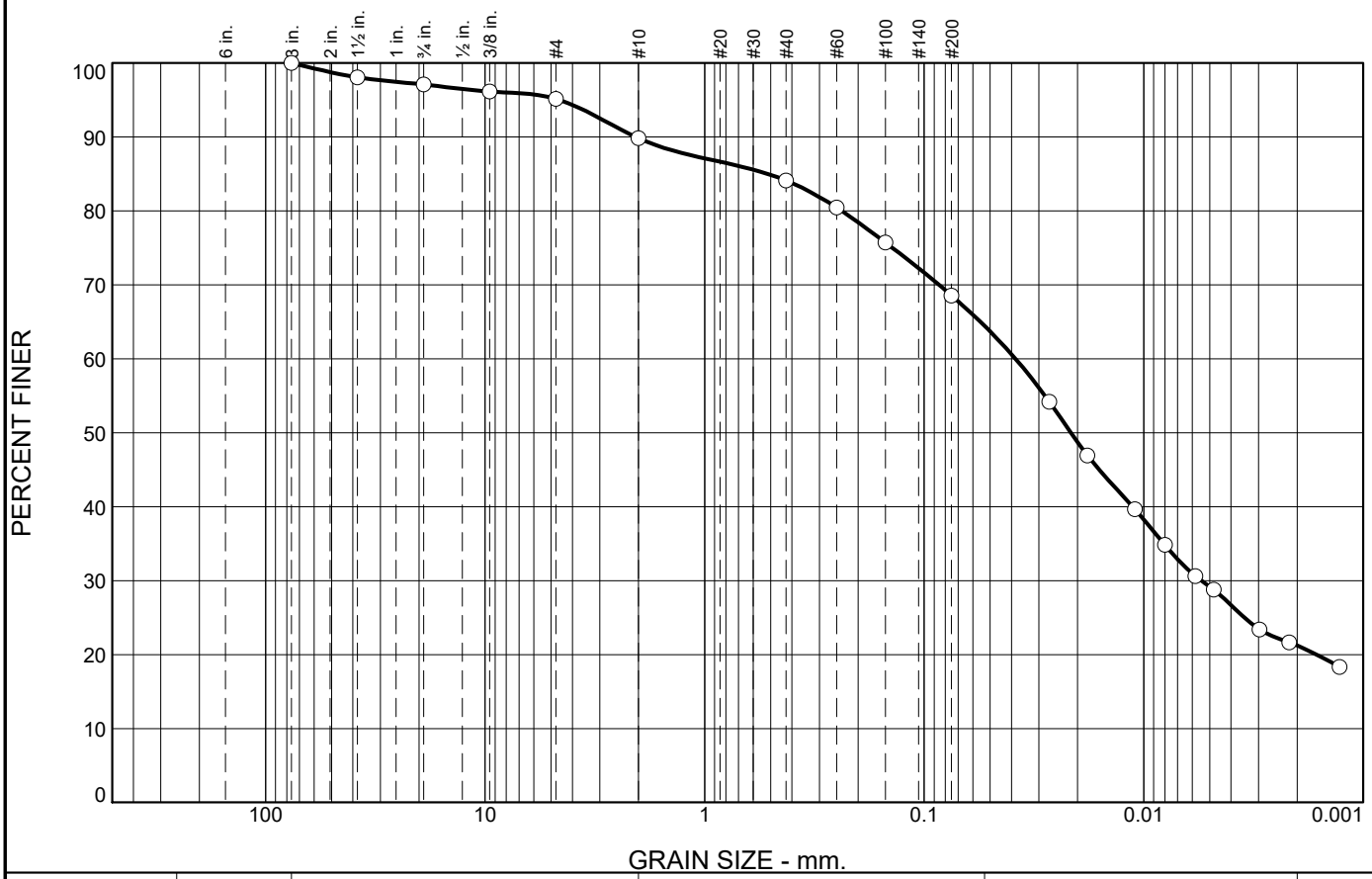

% Stones	% +3"	% Gravel			% Sand					% Silt		% Clay
		Coarse	Medium	Fine	V. Crs.	Crs.	Med.	Fine	V. Fine	Crs.	Fine	
0.0	0.0	2.9	2.0	5.3	2.7	2.2	4.5	8.8	7.2	15.7	27.5	21.2

SIEVE SIZE	PERCENT FINER	SPEC.* PERCENT	PASS? (X=NO)
3.0	100.0		
1.5	98.1		
0.75	97.1		
0.375	96.1		
#4	95.1		
#10	89.8		
#40	84.1		
#60	80.4		
#100	75.7		
#200	68.6		
0.0269 mm.	54.2		
0.0180 mm.	46.9		
0.0110 mm.	39.7		
0.0080 mm.	34.8		
0.0058 mm.	30.6		
0.0048 mm.	28.8		
0.0030 mm.	23.4		
0.0022 mm.	21.6		
0.0013 mm.	18.3		

* (no specification provided)

Soil Description

Brown sandy lean CLAY

Atterberg Limits

PL= 19 LL= 35 PI= 16

Coefficients

D_{90}= 2.0636 D_{85}= 0.5169 D_{60}= 0.0384
D_{50}= 0.0215 D_{30}= 0.0055 D_{15}=
D_{10}= C_u= C_c=

Classification

USCS= CL AASHTO= A-6(9)

Remarks

Natural moisture content = 22.7%

USDA Classification: Loam

Source of Sample: NB-2 **Depth:** 0-5'
Sample Number: Bulk **Date:** 12-5-2019

Geotechnical Solutions, Inc.
Chantilly, Virginia

Client: Timber Ridge at Hartland, LLC
Project: Hartland Drive Bridges
Project No: GP-192603-A **Figure**

Received by VMRC September 1, 2020 /blh

Particle Size Distribution Report

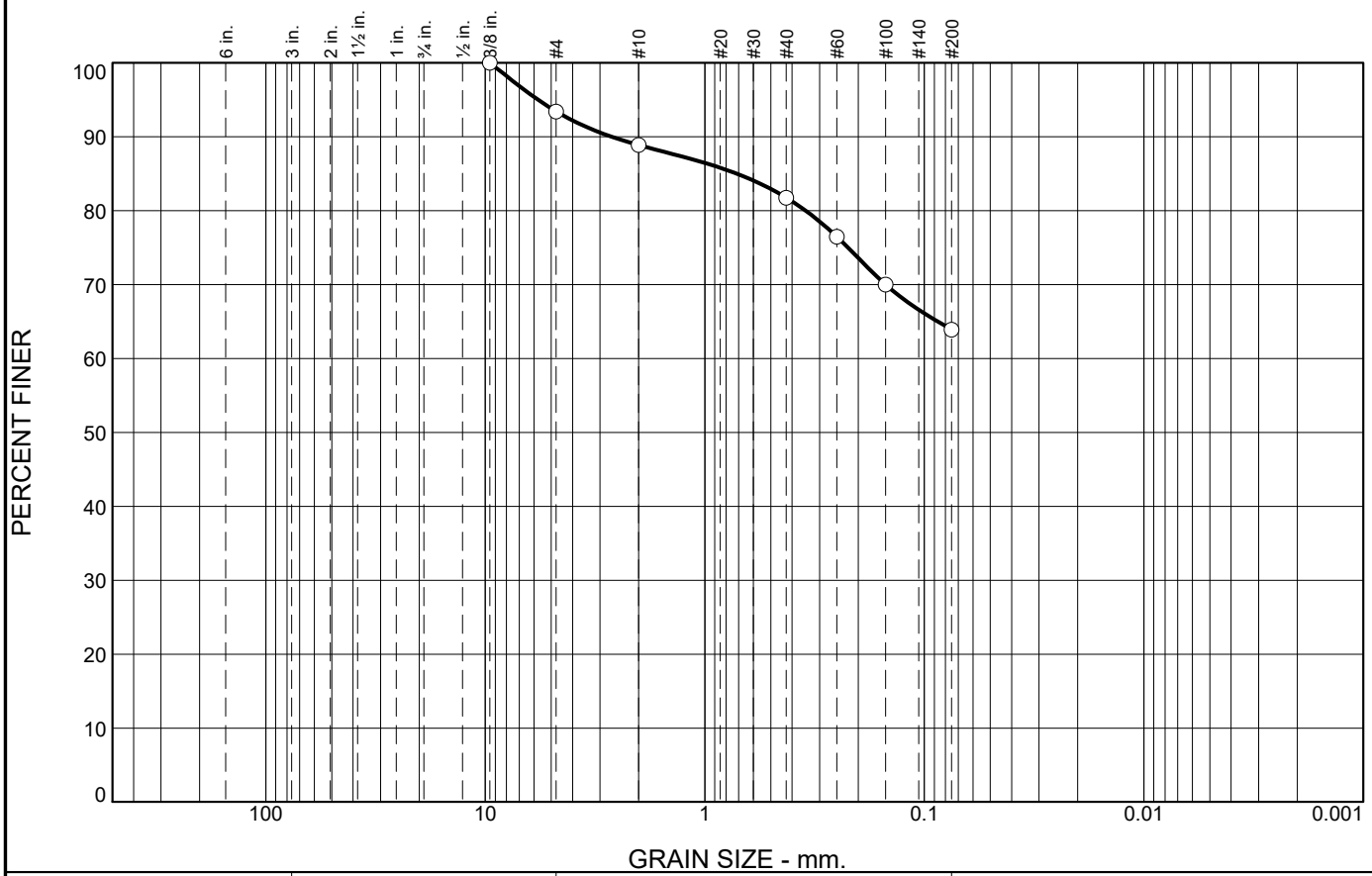

% +3"	% Gravel		% Sand			% Fines	
	Coarse	Fine	Coarse	Medium	Fine	Silt	Clay
0.0	0.0	6.6	4.5	7.2	17.8	63.9	

SIEVE SIZE	PERCENT FINER	SPEC.* PERCENT	PASS? (X=NO)
3/8	100.0		
#4	93.4		
#10	88.9		
#40	81.7		
#60	76.4		
#100	70.0		
#200	63.9		

* (no specification provided)

Soil Description

Reddish brown sandy lean clay

Atterberg Limits

PL= 20 LL= 45 PI= 25

Coefficients

D_{90}= 2.6586 D_{85}= 0.7141 D_{60}=
D_{50}= D_{30}= D_{15}=
D_{10}= C_u= C_c=

Classification

USCS= CL AASHTO= A-7-6(14)

Remarks

Natural moisture content: 22.6%

Source of Sample: NB-2 **Depth:** 4
Sample Number: S3 **Date:** 12-9-19

Geotechnical Solutions, Inc.
Chantilly, Virginia

Client: Timber Ridge at Hartland, LLC
Project: Hartland Drive Bridges
Project No: GP-192603-A **Figure**

Received by VMRC September 1, 2020 /blh

Particle Size Distribution Report

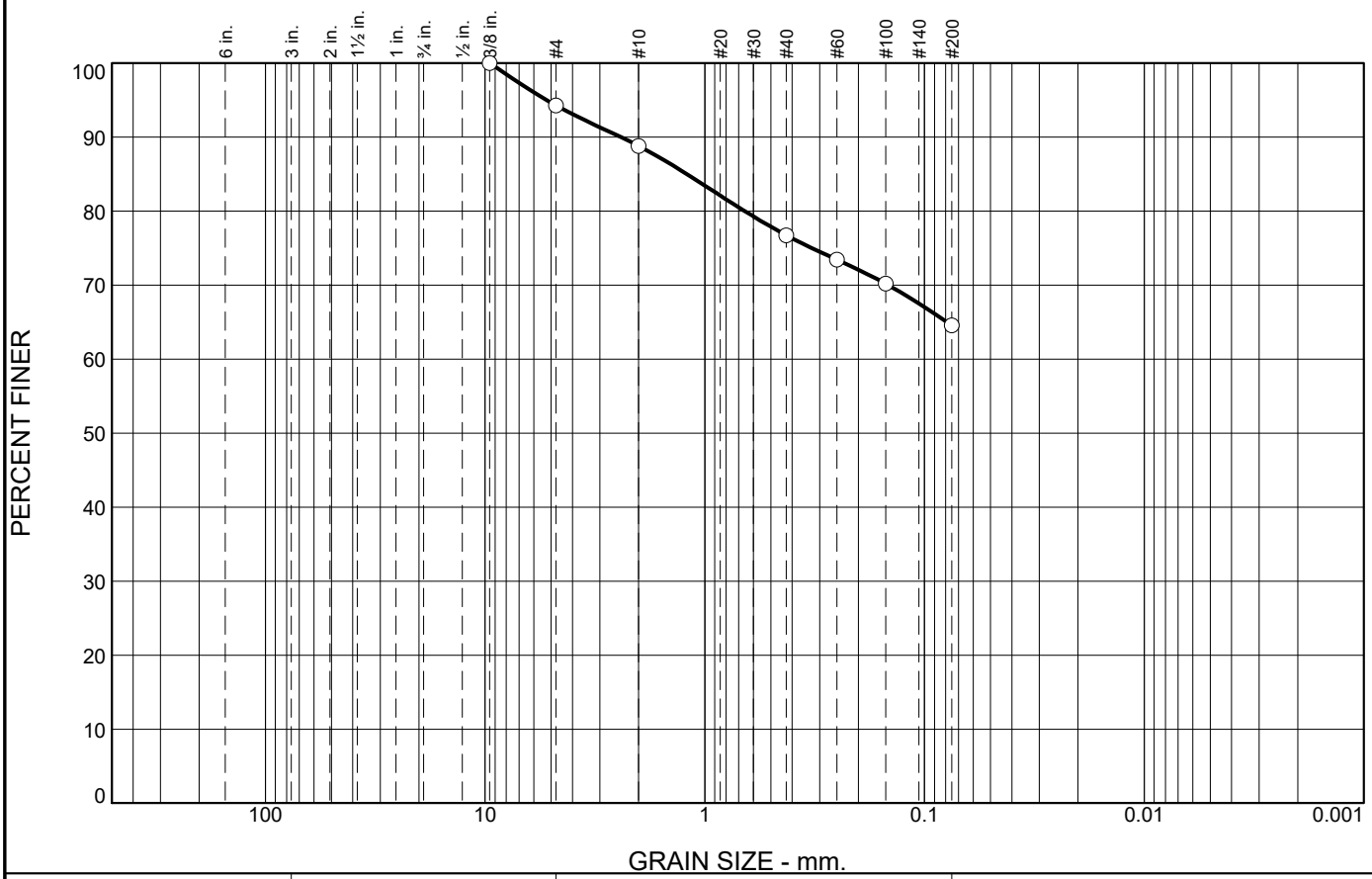

% +3"	% Gravel		% Sand			% Fines	
	Coarse	Fine	Coarse	Medium	Fine	Silt	Clay
0.0	0.0	5.8	5.4	12.1	12.1	64.6	

SIEVE SIZE	PERCENT FINER	SPEC.* PERCENT	PASS? (X=NO)
3/8	100.0		
#4	94.2		
#10	88.8		
#40	76.7		
#60	73.4		
#100	70.2		
#200	64.6		

* (no specification provided)

Soil Description

Reddish brown sandy lean clay

Atterberg Limits

PL= 22 LL= 32 PI= 10

Coefficients

D_{90}= 2.4131 D_{85}= 1.2083 D_{60}=
D_{50}= D_{30}= D_{15}=
D_{10}= C_u= C_c=

Classification

USCS= CL AASHTO= A-4(5)

Remarks

Natural moisture content: 20.2%

Source of Sample: NB-4 **Depth:** 0
Sample Number: S1 **Date:** 12-9-19

Geotechnical Solutions, Inc.
Chantilly, Virginia

Client: Timber Ridge at Hartland, LLC
Project: Hartland Drive Bridges
Project No: GP-192603-A **Figure**

Received by VMRC September 1, 2020 /blh

Particle Size Distribution Report

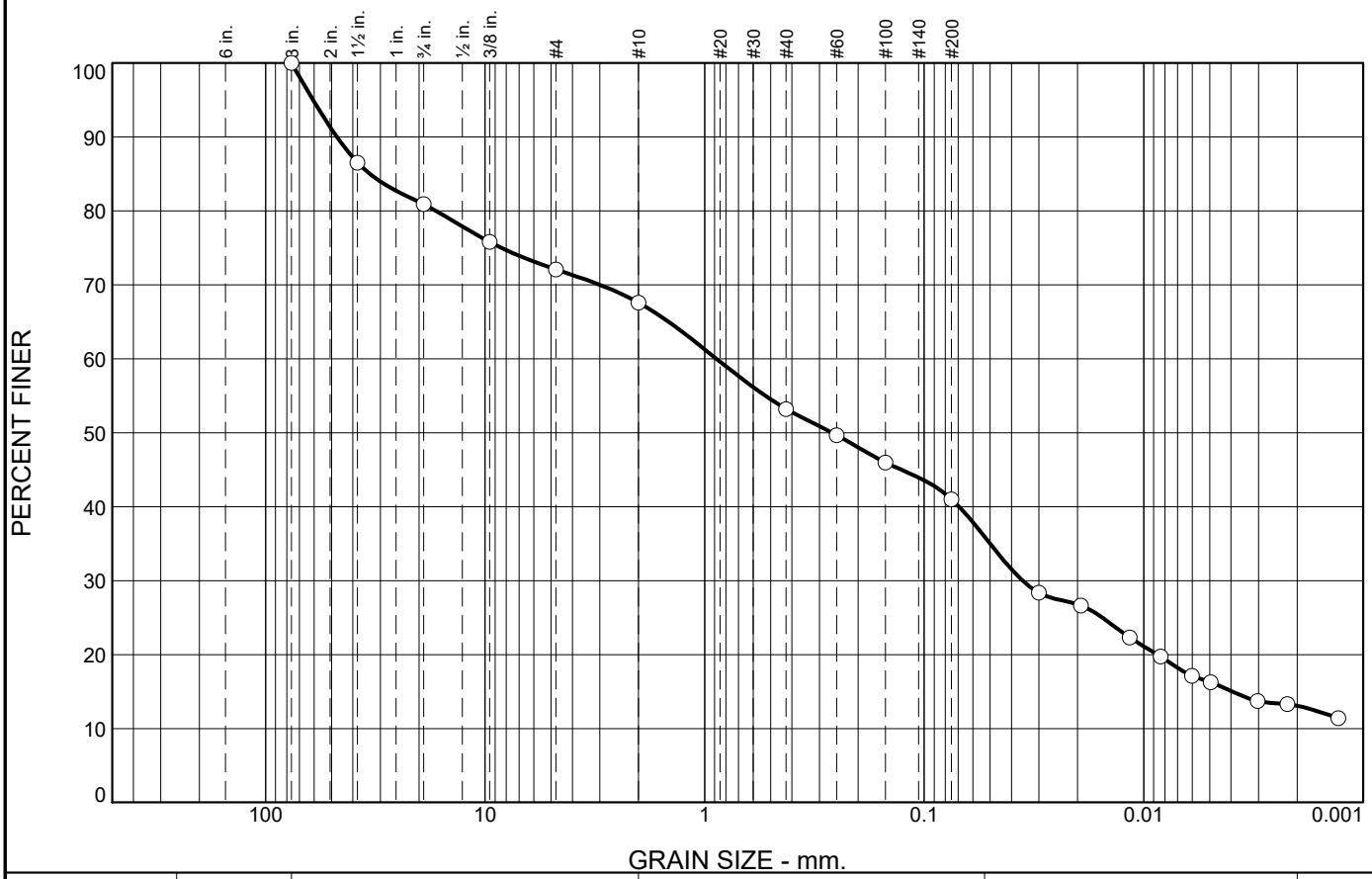

% Stones	% +3"	% Gravel			% Sand					% Silt		% Clay
		Coarse	Medium	Fine	V. Crs.	Crs.	Med.	Fine	V. Fine	Crs.	Fine	
0.0	0.0	19.1	8.8	4.5	6.3	6.8	4.8	6.1	7.7	9.1	13.7	13.1

SIEVE SIZE	PERCENT FINER	SPEC.* PERCENT	PASS? (X=NO)
3.0	100.0		
1.5	86.5		
0.75	80.9		
0.375	75.8		
#4	72.1		
#10	67.6		
#40	53.2		
#60	49.7		
#100	46.0		
#200	41.0		
0.0300 mm.	28.3		
0.0193 mm.	26.6		
0.0116 mm.	22.3		
0.0084 mm.	19.7		
0.0060 mm.	17.1		
0.0050 mm.	16.3		
0.0030 mm.	13.7		
0.0022 mm.	13.3		
0.0013 mm.	11.4		

* (no specification provided)

Soil Description

Brown clayey SAND with gravel

Atterberg Limits

PL= 20 LL= 35 PI= 15

Coefficients

D_{90}= 47.3640 D_{85}= 33.5156 D_{60}= 0.8834
D_{50}= 0.2623 D_{30}= 0.0356 D_{15}= 0.0039
D_{10}= C_u= C_c=

Classification

USCS= SC AASHTO= A-6(2)

Remarks

Natural moisture content = 22.1%

USDA Classification: Loam

Source of Sample: NB-5 **Depth:** 0-2'
Sample Number: Bulk **Date:** 12-5-2019

Geotechnical Solutions, Inc.
Chantilly, Virginia

Client: Timber Ridge at Hartland, LLC
Project: Hartland Drive Bridges
Project No: GP-192603-A **Figure**

Received by VMRC September 1, 2020 /blh

4.7 Scour Recommendations

Scour analysis was performed using the Rock Erodibility Index method. The following conservative rock parameters were utilized to compute the Rock Erodibility Index for the siltstone rock of Stratum IV.

Table 7 – Rock Erodibility Index

Parameter	North Bridge	South Bridge
Mass strength Number, M_s	17.7	8.39
Rock joint set number, J_n	1.83	1.83
Rock Quality Designation (RQD)	79.7	86.8
Joint Roughness Number, J_r	1.5	1.5
Joint Alteration Number, J_a	2.0	2.0
Relative Orientation Parameter, J_s	0.69	0.69
K_b=RQD/J_n	43.55	47.43
K_d=J_r/J_a	0.75	0.75
The Rock Erodibility Index, K = M_s* K_b* K_d* J_s	398.91	205.93

It is our opinion that the rock of Stratum IV is highly resistant to scour. The IGM of Stratum III is considered scourable.

Where the foundation of any structural element, such as wing walls, does not extend to the rock of Stratum IV, scour protection shall be provided.

Received by VMRC September 1, 2020 /blh

Appendix B

Detailed Scour Calculations

Received by VMRC September 1, 2020 /blh

100-year Scour Calculations

100-year Hydraulic parameters Table

	User-defined Scour Table HEC-RAS output for the Profile and the Bridge under analysis																Design Discharge Return Period (Tr 100-Year	
	Reach	River Sta	Profile	W.S. Elev	Hydr Depth C	Hydr Depth L	Hydr Depth R	Vel Chnl	Vel Left	Vel Right	Q Channel	Q Left	Q Right	Top W Act Chan	Top W Act Left	Top W Act Right	Top Wdth Act	E.G. Slope
Section Location				(ft)	(ft)	(ft)	(ft)	(ft/s)	(ft/s)	(ft/s)	(cfs)	(cfs)	(cfs)	(ft)	(ft)	(ft)	(ft)	(ft/ft)
Approach Sec.	Reach2US	3318.13	100YR	299.1	7.83	3.44	5.24	3.91	1.12	1.48	817.78	617.21	1561.01	26.7	160.24	201.14	388.1	0.00109
U/S of Bridge Sec.	Reach2US	3209.92	100YR	298.9	9.05	3.79	5.92	4.88	1.37	1.85	827.35	559.34	1609.31	18.76	107.36	147.21	273.3	0.00145
BR inside U/S Sec.	Reach2US	3170 BR U	100YR	298.8	8.89	4.49	5.47	6.85	2.16	2.32	1141.23	605.34	1249.42	18.76	62.5	98.35	179.6	0.00293
BR inside D/S Sec.	Reach2US	3170 BR D	100YR	298.2	8.22	4.33	5.41	6.76	2.18	2.39	1165.87	541.96	1288.17	20.98	57.4	99.47	177.9	0.00314
D/s of Bridge Sec.	Reach2US	3074.92	100YR	298.1	8.16	3.65	5.24	5.68	1.66	2.11	972.16	535.85	1487.99	20.98	88.31	134.38	243.7	0.00223

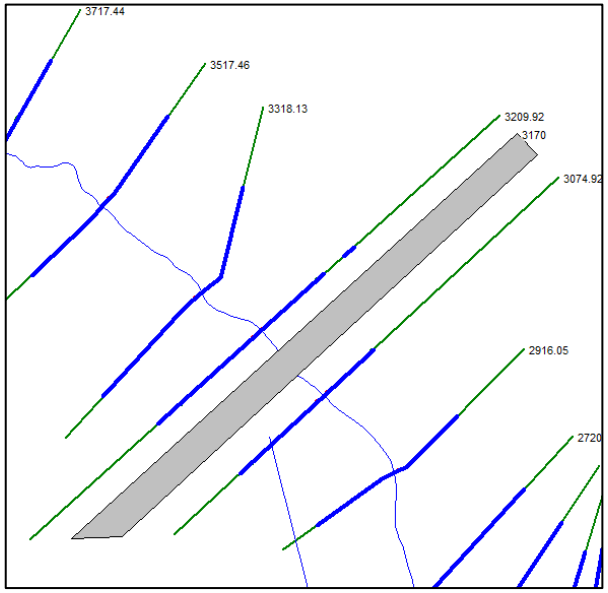

Received by VMRC September 1, 2020 /blh

Flow Tubes for Xsec just u/s of bridge

each2US RS: 3209.92 Profile: 100YR

	Pos	Left Sta	Right Sta	Flow	Area	W.P.	Percent	Hydr	Velocity	Shear	Power	
		(ft)	(ft)	(cfs)	(sq ft)	(ft)	Conv	Depth(ft)	(ft/s)	(lb/sq ft)	(lb/ft s)	
1	LOB	275.25	305.83	0	3.49	14.39	0	0.24	0	0.02	0	
2	LOB	305.83	336.42	0	1.24	7.14	0	0.17	0	0.02	0	
3	LOB	336.42	367	0	3.77	16.42	0	0.23	0	0.02	0	
4	LOB	367	402.79	65.63	75.38	35.94	2.19	2.11	0.87	0.19	0.17	
5	LOB	402.79	438.57	196.06	145.3	35.88	6.54	4.06	1.35	0.37	0.49	L Abut
6	LOB	438.57	474.36	297.65	186.7	35.91	9.94	5.22	1.59	0.47	0.75	
7	Chan	474.36	493.12	827.35	169.7	22.23	27.62	9.05	4.88	0.69	3.37	
8	ROB	493.12	522.56	272.9	158.4	29.74	9.11	5.38	1.72	0.48	0.83	pier
9	ROB	522.56	552	319.1	173.4	29.47	10.65	5.89	1.84	0.53	0.98	
10	ROB	552	581.45	353.03	184.1	29.44	11.78	6.25	1.92	0.57	1.09	
11	ROB	581.45	610.89	322.35	174.4	29.48	10.76	5.92	1.85	0.54	0.99	R Abut
12	ROB	610.89	640.33	341.94	180.7	29.46	11.41	6.14	1.89	0.56	1.05	
13	ROB	640.33	670.32	0	149.9	30.27	0	5	0	0.45	0	
14	ROB	670.32	700.31	0	23.38	14.45	0	1.66	0	0.15	0	

Plan: Prop NorthFork Broad Reach2US RS: 3170 BR U Profile: 100YR

	Pos	Left Sta	Right Sta	Flow	Area	W.P.	Percent	Hydr	Velocity	Shear	Power	
		(ft)	(ft)	(cfs)	(sq ft)	(ft)	Conv	Depth(ft)	(ft/s)	(lb/sq ft)	(lb/ft s)	
1	LOB	402.79	438.57	184.28	99.67	27.94	6.15	3.73	1.85	0.65	1.21	L Abut
2	LOB	438.57	474.36	421.06	180.9	35.91	14.05	5.06	2.33	0.92	2.14	
3	Chan	474.36	493.12	1141.23	166.69	22.23	38.09	8.89	6.85	1.37	9.39	
4	ROB	493.12	522.56	249.63	132.93	36.01	8.33	5.22	1.88	0.67	1.27	
5	ROB	522.56	552	424.09	168.61	29.47	14.16	5.73	2.52	1.05	2.63	
6	ROB	552	581.45	470.46	179.37	29.44	15.7	6.09	2.62	1.11	2.92	
7	ROB	581.45	610.89	105.25	57.54	16.22	3.51	4.1	1.83	0.65	1.19	R Abut

Received by VMRC September 1, 2020 /blh

Flow Tubes for Approach Xsec

Plan: Prop NorthFork Broad Reach2US RS: 3318.13 Profile: 100YR

	Pos	Left Sta	Right Sta	Flow	Area	W.P.	Percent	Hydr	Velocity	Shear	Power	
		(ft)	(ft)	(cfs)	(sq ft)	(ft)	Conv	Depth(ft)	(ft/s)	(lb/sq ft)	(lb/ft s)	
1	LOB	113.16	132.02	0.24	1.76	9.37	0.01	0.19	0.14	0.01	0	Inactive
2	LOB	132.02	150.87	4.06	12.64	18.87	0.14	0.67	0.32	0.05	0.01	Inactive
3	LOB	150.87	169.73	12.64	25.02	18.93	0.42	1.33	0.51	0.09	0.05	Inactive
4	LOB	169.73	188.59	48.41	55.97	18.91	1.62	2.97	0.86	0.2	0.17	Active
5	LOB	188.59	207.45	73.31	71.74	18.87	2.45	3.8	1.02	0.26	0.27	Active
6	LOB	207.45	226.31	96.86	84.84	18.9	3.23	4.5	1.14	0.31	0.35	Active
7	LOB	226.31	245.17	116.3	94.6	18.86	3.88	5.02	1.23	0.34	0.42	Active
8	LOB	245.17	264.03	126.2	99.35	18.86	4.21	5.27	1.27	0.36	0.46	Active
9	LOB	264.03	282.89	139.2	106	19.13	4.65	5.62	1.31	0.38	0.5	Active
10	Chan	282.89	309.59	817.8	209.1	30.84	27.3	7.83	3.91	0.46	1.81	Active
11	ROB	309.59	328.53	133.8	95.01	18.95	4.47	5.02	1.41	0.34	0.48	Active
12	ROB	328.53	347.46	145.4	99.86	18.94	4.85	5.27	1.46	0.36	0.52	Active
13	ROB	347.46	366.4	161.3	106.3	18.94	5.38	5.61	1.52	0.38	0.58	Active
14	ROB	366.4	385.33	171.4	110.2	18.94	5.72	5.82	1.56	0.4	0.62	Active
15	ROB	385.33	404.27	175.7	111.9	18.94	5.87	5.91	1.57	0.4	0.63	Active
16	ROB	404.27	423.2	177.7	112.6	18.94	5.93	5.95	1.58	0.41	0.64	Active
17	ROB	423.2	442.14	175.7	111.9	18.94	5.86	5.91	1.57	0.4	0.63	Active
18	ROB	442.14	461.07	154.3	103.5	18.94	5.15	5.47	1.49	0.37	0.56	Active
19	ROB	461.07	480.01	144	99.27	18.94	4.81	5.24	1.45	0.36	0.52	Active
20	ROB	480.01	498.94	107.3	83.37	19.04	3.58	4.4	1.29	0.3	0.38	Active
21	ROB	498.94	517.88	14.46	21.02	12.28	0.48	1.78	0.69	0.12	0.08	Inactive

Received by VMRC September 1, 2020 /blh

Projection of abutments upstream

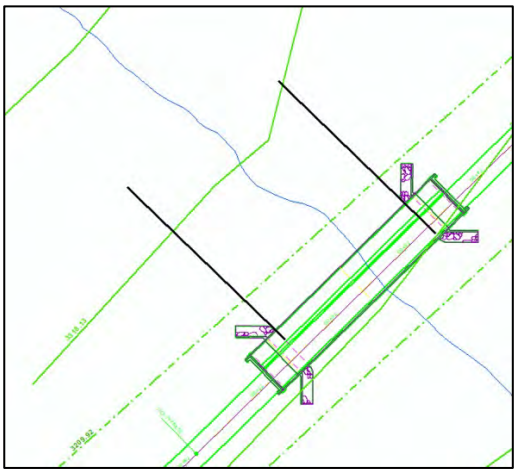

Table of overbank flow obstruction

	Approach Section	
	LOB	ROB
water edge	122.65	510.73
Projected station of Abut to approach	206	391
Flow in approach section overbank obstructed by abutment	133.02	826.0147
Flow area of approach section overbank obstructed by abutment	161.61	565.1071
Length of embankment projected normal to the flow	83.35	119.73
Length of active flow obstructed by abutment projected into flow	36.27	107.94

Cross Section Output for BR U

Plan: Prop NorthFork Broad Reach2US RS: 3170 BR U Profile: 100YR					
E.G. Elev (ft)	299.09	Element	Left OB	Channel	Right OB
Vel Head (ft)	0.33	Wt. n-Val.	0.1	0.045	0.1
W.S. Elev (ft)	298.76	Reach Len. (ft)	47.67	47.67	47.67
Crit W.S. (ft)	296.22	Flow Area (sq ft)	280.57	166.69	538.46
E.G. Slope (ft/ft)	0.0029	Area (sq ft)	280.57	166.69	538.46
Q Total (cfs)	2996	Flow (cfs)	605.34	1141.23	1249.42
Top Width (ft)	179.61	Top Width (ft)	62.5	18.76	98.35
Vel Total (ft/s)	3.04	Avg. Vel. (ft/s)	2.16	6.85	2.32
Max Chl Dpth (ft)	9.81	Hydr. Depth (ft)	4.49	8.89	5.47
Conv. Total (cfs)	55357	Conv. (cfs)	11184.8	21086.3	23085.3
Length Wtd. (ft)	47.67	Wetted Per. (ft)	63.85	22.23	111.15
Min Ch El (ft)	288.95	Shear (lb/sq ft)	0.8	1.37	0.89
Alpha	2.28	Stream Power (lb/ft s)	1.73	9.39	2.06
Frctn Loss (ft)		Cum Volume (acre-ft)	48.18	20.96	26.05
C & E Loss (ft)		Cum SA (acres)	13.25	2.7	6.29

Received by VMRC September 1, 2020 /blh

Project Name:	Hartland	Discharge Tr:	100-Year
Structure Name:	North Bridge	Engineer:	K.Z.
Stream Name:	North Fork- Broad Run	Date:	02/13/20

Type of Contraction Scour

$$V_c = 11.17 \times y_1^{1/6} \times D_{50}^{1/3}$$

APPROACH MAIN CHANNEL		
Description of Variable	Symbol	Value
User Entered Variables		
Median diameter of bed material, mm	D_{50} =	0.26
Average depth (hydraulic depth) of flow in the main channel of the approach section, ft	y_1 =	7.83
Average velocity of flow in the main channel, ft/s	V_1 =	3.91
Calculated Results		
Maximum between Median diameter of bed material and lower limit (0.2 mm), ft	D_{50} =	0.000853
Critical velocity of bed material, ft/s	V_c =	1.49
Type of contraction scour for main channel		**Live Bed Scour**
APPROACH LEFT OVERBANK		
User Entered Variables		
Median diameter of bed material, mm	D_{50} =	0.04
Average depth (hydraulic depth) of flow in the left overbank of the approach section, ft	y_1 =	3.44
Average velocity of flow in the left overbank, ft/s	V_1 =	1.12
Calculated Results		
Maximum between Median diameter of bed material and lower limit (0.2 mm), ft	D_{50} =	0.000656
Critical velocity of bed material, ft/s	V_c =	1.19
Type of contraction scour for left overbank		**Clear Water Scour**
APPROACH RIGHT OVERBANK		
User Entered Variables		
Median diameter of bed material, mm	D_{50} =	0.02
Average depth (hydraulic depth) of flow in the right overbank of the approach section, ft	y_1 =	5.24
Average velocity of flow in the right overbank, ft/s	V_1 =	1.48
Calculated Results		
Maximum between Median diameter of bed material and lower limit (0.2 mm), ft	D_{50} =	0.000656
Critical velocity of bed material, ft/s	V_c =	1.28
Type of contraction scour for right overbank		**Live Bed Scour**

Comments (specify cross sections used, parameters estimated, assumptions, etc.):

D50 channel =0.26 mm from NB-5, D50 LOB= 0.04 from NB-1, D50 ROB= 0.02 from NB-2.
Minimum D50 of 0.2 mm used in calculations.
Approach Section is XS 3318.13. All y1 and V1 values from Hydraulic Parameters Table.

Received by VMRC September 1, 2020 /blh

Project Name:	Hartland	Discharge Tr:	100-Year
Structure Name:	North Bridge	Engineer:	K.Z.
Stream Name:	North Fork- Broad Run	Date:	02/13/20

Live Bed Contraction Scour - Modified Laursen

MAIN CHANNEL SECTION

$$y_s = y_1 \times \left(\frac{Q_2}{Q_1}\right)^{6/7} \times \left(\frac{W_1}{W_2}\right)^{k_1} - y_o$$

	Description of Variable	Symbol	Value
	User Entered Variables		
Approach Section	Slope of energy gradeline of main channel of approach section, ft/ft	S_1 =	0.00109
Approach Section	Median diameter of bed material, mm	D_{50} =	0.260
Approach Section	Discharge in the main channel of the approach section, cfs	Q_1 =	817.78
Approach Section	Average depth (hydraulic depth) of flow in the main channel of the approach section, ft	y_1 =	7.83
Approach Section	Bottom (or Top) width of approach main channel, ft	W_1 =	26.70
Bridge Section	Bottom (or Top) width of main channel in bridge section minus piers, ft	W_2 =	18.76
Bridge Section	Discharge in the main channel of the bridge section, cfs	Q_2 =	1141.23
Bridge Section	Existing average depth (hydraulic depth) in the main channel of bridge before scour, ft	y_o =	8.89
	Calculated Variables		
	Fall velocity of channel bed material, fps (based on curve fitting to Figure 6.8 for 20° C)	ω =	0.12
	Shear velocity in the approach section main channel, ft/s	V_* =	0.52
	Mode of bed material transport coefficient for the main channel	k_1 =	0.69
	Calculated Results		
	Average depth in the main channel of the bridge section after scour, ft	y_2 =	13.29
	Average depth of scour in the main channel of the bridge section, ft	y_s =	**4.40**

Comments (specify cross sections used, parameters estimated, assumptions, etc.):

D50 channel =0.26 mm from NB-5. XS 3318 is approach section. XS 3170 BR U used as bridge section.

Top widths used in calculations.

S1,Q1,y1,W1,Q2 ,W2, y0 from Hydraulic Parameters table. W2 has no piers within it.

Received by VMRC September 1, 2020 /blh

Project Name:	Hartland	Discharge Tr:	100-Year
Structure Name:	North Bridge	Engineer:	K.Z.
Stream Name:	North Fork- Broad Run	Date:	02/13/20

Clear Water Contraction Scour - Laursen

BRIDGE LEFT OVERBANK SETBACK AREA

$$y_s = \left[\frac{0.0077 \times Q_{left}^{\ 2}}{(1.25 \times D_{50})^{2/3} \times W_{contracted}^{\ 2}} \right]^{3/7} - y_o$$

Description of Variable	Symbol	Value
User Entered Variables		
Median diameter of bed material, ft	D_{50} =	0.000656
Discharge in left overbank through bridge, cfs	Q_{left} =	605.34
Bottom width of left overbank flow area at bridge minus pier width(s), ft	$W_{contracted}$ =	62.50
Average depth (hydraulic depth) of flow in the left overbank before scour, ft	y_o =	4.49
Calculated Results		
Average depth of flow in the left overbank of the bridge section after scour, ft	y_2 =	6.63
Average depth of scour in the left overbank of the bridge section, ft	y_s =	**2.14**

Comments (specify cross sections used, parameters estimated, assumptions, etc.):

D50 LOB= 0.04 from NB-1. XS 3170 BR U used as bridge section.

Top widths used in calculations.

Qlef, Wcontracted (no pier within it), y0 from Hydraulic parameters table.

Received by VMRC September 1, 2020 /blh

Project Name:	Hartland	Discharge Tr:	100-Year
Structure Name:	North Bridge	Engineer:	K.Z.
Stream Name:	North Fork- Broad Run	Date:	02/13/20

Live Bed Contraction Scour - Modified Laursen

RIGHT OVERBANK

$$y_s = y_1 \times \left(\frac{Q_2}{Q_1}\right)^{6/7} \times \left(\frac{W_1}{W_2}\right)^{k_1} - y_o$$

	Description of Variable	Symbol	Value
User Entered Variables			
Approach Section	Slope of energy gradeline of ROB of approach section, ft/ft	S_1 =	0.001093
Approach Section	Median diameter of bed material, mm	D_{50} =	0.0200
Approach Section	Discharge in the ROB of the approach section, cfs	Q_1 =	1561.01
Approach Section	Average depth (hydraulic depth) of flow in the ROB of the approach section, ft	y_1 =	5.24
Approach Section	Bottom (or Top) width of approach ROB, ft	W_1 =	201.14
Bridge Section			
Bridge Section	Bottom (or Top) width of ROB in bridge section minus piers, ft	W_2 =	94.35
Bridge Section	Discharge in the ROB of the bridge section, cfs	Q_2 =	1249.42
Bridge Section	Existing average depth (hydraulic depth) of flow in the ROB of bridge before scour, ft	y_o =	5.47
Calculated Variables			
	Fall velocity of ROB material, fps (based on curve fitting to Figure 6.8 for 20° C)	ω =	0.00
	Shear velocity in the approach section ROB, ft/s	V_* =	0.43
	Mode of bed material transport coefficient for the ROB	k_1 =	0.69
Calculated Results			
	Average depth in the ROB of the bridge section after scour, ft	y_2 =	7.30
	Average depth of scour in the ROB of the bridge section, ft	y_s =	**1.83**

Comments (specify cross sections used, parameters estimated, assumptions, etc.):

D50 ROB= 0.02 from NB-2. XS 3318 is approach section. XS 3170 BR U used as bridge section.

S1,Q1,y1,W1,Q2 ,W2, y0 from Hydraulic Parameters table.

Top widths used in calculations. Pier width of 4 ft. deducted from W2: 98.35-4 = 94.35

Received by VMRC September 1, 2020 /blh

Project Name:	Hartland	Discharge Tr:	100-Year
Structure Name:	North Bridge	Engineer:	K.Z.
Stream Name:	North Fork- Broad Run	Date:	02/13/20

Pier Scour - Modified CSU

PIER 1

$$y_s = 2.0 \times y_1 \times K_1 \times K_2 \times K_3 \times \left(\frac{a}{y_1}\right)^{0.65} \times Fr_1^{0.43}$$

Description of Variable	Symbol	Value
User Entered Variables		
Mean velocity of flow directly upstream of pier, ft/s	V_1 =	4.88
Flow depth directly upstream of pier, ft	y_1 =	9.05
Pier width, ft	a =	4.00
Pier length, ft	L =	48.00
Angle of attack of flow, degrees	θ =	0
Correction factor for pier nose shape, see Fig 7.3 here Round Nose	K_1 =	1.0
Correction factor for bed condition Small Dunes	K_3 =	1.1
checking box applies max. scour depth control, use only If pier is round nose and aligned with flow and pressure flow not considered	☑	
Median diameter of bed material in front of the pier, mm	D_{50} =	0.0215
Diameter of Bed material of which 84% are smaller, mm, Only needed for Coarse Bed Material Correction	D_{84} =	0.44
Is the pier facing clear-water flow conditions?	☐	
Coarse bed? According to your Input: Coarse Bed material Conditions don't Apply	☐	
Very Wide Piers? According to your Input: Very Wide Pier Conditions Don't Apply	☐	
Calculated Variables		
Correction factor for angle of attack of flow	K_2 =	1.00
Froude Number directly upstream of the pier	Fr_1 =	0.29
The approach velocity required to initiate scour at pier for D_{50}, ft/s	V_{cD50} =	0.67
Sediment gradation coefficient = D_{84}/D_{50}	σ=	20.47
Densimetric particle Froude Number	H=	79.71
Pier Scour in Coarse Bed Material	Coarse Material y_s =	Not Calculated
Max. scour depth if you have round nose pier aligned with flow, ft	Max. y_s =	9.60
Pier Scour Correction Factor for very Wide Piers in Shallow Flow	K_w=	Not Used
Calculated Results		
Average depth of scour in the main channel of the bridge section, ft	y_s =	**6.84**
Top Width of scour hole on either side of the pier, ft	W =	**13.67**

Comments (specify cross sections used, parameters estimated, assumptions, etc.):

Due to proximity of pier to main channel V1 and y1 are set using average channel values for XS 3209.92 just u/s of bridg from Hydraulic Parameters Table.
D50 at pier location = 0.02 & D84= 0.44 from NB-2. Pier L was set 48' assuming one continuous pier through structure.
Angle of attack was set to zero because pier is aligned with flow direction.

Received by VMRC September 1, 2020 /blh

Project Name:	Hartland	Discharge Tr:	100-Year
Structure Name:	North Bridge	Engineer:	K.Z.
Stream Name:	North Fork- Broad Run	Date:	02/13/20

NCHRP 24-20 Abutment Scour for Conditions (a) & (b)

Left Abutment

$$y_{\max} = \alpha_A y_c \quad or \quad y_{\max} = \alpha_B y_c \quad and \quad y_s = y_{\max} - y_0$$

Description of Variable	Symbol	Value
Common User Entered Variables		
Projected length of left embankment on approach Section, ft	L=	83.35
Width of the left floodplain of approach section, ft	B_f=	160.24
L/Bf <0.75, so scour condition (b) & clear-water contraction scour apply ; provide input variables for Condition (b)		
Condition (b) User Entered Variables	Wingwall	
Left overbank median particle size (a minimum of 0.2 mm is used in calculations), mm	D_{50}=	0.04
Discharge in the LOB of the approach section, cfs	Q_{ob}=	617.21
Unit discharge in the constricted opening accounting for non-uniform flow distribution, cfs/ft	q_{2f} =	8.95
Left abutment flow depth before scour (bridge section at abutment location), ft	y_o=	3.73
Select between spill-through and wingwall abutmenst for clear-water conditions	Wingwall	
Common Calculated Variables		
Ratio of L to B_f	L/B_f=	0.52
Condition (b) Calculated Variables		
Unit discharge in LOB of approach section, cfs/ft	q_f =	3.85
Flow depth including clear-water contraction scour, ft	y_c=	6.71
Ratio of the unit discharges, to enter X-axis on Figure 8.11 or 8.12	q_{2f}/q_f=	2.32
Scour Amplification factor from Figure 8.11 or 8.12	α_B=	1.77
Maximum flow depth resulting from abutment scour, ft	y_{max} =	11.91
Left Abutment scour depth, ft	y_s =	8.18
Final Results		
Maximum flow depth resulting from abutment scour, ft	y_{max} =	11.91
Left Abutment scour depth, ft	**y_s =**	**8.18**

Comments (specify cross sections used, parameters estimated, assumptions, etc.):

D50 LOB= 0.04 from NB-1, Minimum D50 of 0.2 mm used in calculations. XS 3318 = approach section.

XS 3170 BR U = bridge sec. L from Table of overbank flow obstruction, Bf & Qob from Hydraulic Parameters table.

Set-back L= L bank st.- abut. st. (474.36-406), bank stations in model = 68.36'.

Chann Hyd. Depth for BR inside U/S Sec. (XS 3170 BR U) in Hydraulic Parameters table = 8.89'.

SBR=Set-back Length/chann Hyd Depth = 68.36/8.89 (from above)= 7.69

SBR> 5 for both abuts.: Case b applies for estimating q2f.

q2f= Overbank (Q/A) x floodplain Hyd. Depth= (559.34/280.57) x 4.49= 8.95 cfs/ft.

"A" from table of Cross Section Output for BR U, Q and Hydr Depth L from Hydraulic Parameters Table.

y0 from Flow Tubes 1 for RS: 3170 BR U= 3.73'.

Received by VMRC September 1, 2020 /blh

Project Name:	Hartland	Discharge Tr:	100-Year
Structure Name:	North Bridge	Engineer:	K.Z.
Stream Name:	North Fork- Broad Run	Date:	02/13/20

NCHRP 24-20 Abutment Scour for Conditions (a) & (b)

Right Abutment

$$y_{\max} = \alpha_A y_c \quad or \quad y_{\max} = \alpha_B y_c \quad and \quad y_s = y_{\max} - y_0$$

Description of Variable	Symbol	Value
Common User Entered Variables		
Projected length of right embankment on approach Section, ft	L=	119.73
Width of the right floodplain of approach section, ft	B_f=	201.14
L/Bf <0.75, so scour condition (b) & clear-water contraction scour apply ; provide input variables for Condition (b)		
Condition (b) User Entered Variables	Wingwall	
right overbank median particle size (a minimum of 0.2 mm is used in calculations), mm	D_{50}=	0.02
Discharge in the ROB of the approach section, cfs	Q_{ob}=	1561.01
Unit discharge in the constricted opening accounting for non-uniform flow distribution, cfs/ft	q_{2f} =	16.35
Right abutment flow depth before scour (bridge section at abutment location), ft	y_o=	4.10
Select between spill-through and wingwall abutmenst for clear-water conditions	Wingwall	
Common Calculated Variables		
Ratio of L to B_f	L/B_f=	0.60
Condition (b) Calculated Variables		
Unit discharge in ROB of approach section, cfs/ft	q_f =	7.76
Flow depth including clear-water contraction scour, ft	y_c=	11.25
Ratio of the unit discharges, to enter X-axis on Figure 8.11 or 8.12	q_{2f}/q_f=	2.11
Scour Amplification factor from Figure 8.11 or 8.12	α_B=	1.90
Maximum flow depth resulting from abutment scour, ft	y_{max} =	21.39
Right Abutment scour depth, ft	y_s =	17.29
Final Results		
Maximum flow depth resulting from abutment scour, ft	y_{max} =	21.39
Right Abutment scour depth, ft	**y_s =**	**17.29**

Comments (specify cross sections used, parameters estimated, assumptions, etc.):

D50 ROB= 0.02 from NB-2, Minimum D50 of 0.2 mm used in calculations. XS 3318 = approach section.

XS 3170 BR U = bridge sec. L from Table of overbank flow obstruction, Bf & Qob from Hydraulic Parameters table.

Set-back L= R Abut Sta- R Bank Sta (601.33-493.12), bank stations in model = 108.21'.

Chann Hyd. Depth for BR inside U/S Sec. (XS 3170 BR U) in Hydraulic Parameters table = 8.89'.

SBR=Set-back Length/chann Hyd Depth = 108.21/8.89 (from above)= 12.17.

SBR> 5 for both abuts.: Case b applies for estimating q2f.

q2f= Overbank (Q/A) x floodplain Hyd. Depth= (1609.31/538.46) x5.47= 16.35 cfs/ft.

"A" from table of Cross Section Output for BR U, Q and Hydr Depth R from Hydraulic Parameters Table.

y0 from Flow Tubes 7 for RS: 3170 BR U= 4.1'.

Received by VMRC September 1, 2020 /blh

500-year Scour Calculations

500-year Hydraulic parameters Table

	User-defined Scour Table HEC-RAS output for the Profile and the Bridge under analysis																Design Discharge Return Period (Tr): 500-Year	
	Reach	River Sta	Profile	W.S. Elev	Hydr Depth C	Hydr Depth L	Hydr Depth R	Vel Chnl	Vel Left	Vel Right	Q Channel	Q Left	Q Right	Top W Act Chan	Top W Act Left	Top W Act Right	Top Wdth Act	E.G. Slope
Section Location				(ft)	(ft)	(ft)	(ft)	(ft/s)	(ft/s)	(ft/s)	(cfs)	(cfs)	(cfs)	(ft)	(ft)	(ft)	(ft)	(ft/ft)
Approach Sec.	Reach2US	3318.13	500YR	301.2	9.91	4.73	7.17	4.62	1.39	1.84	1223.1	1301.41	2719.47	26.7	197.34	206.42	430.5	0.001114
U/S of Bridge Sec.	Reach2US	3209.92	500YR	301	11.08	5.83	7.95	5.92	1.94	2.39	1231.8	1215.26	2796.92	18.76	107.36	147.21	273.3	0.001633
BR inside U/S Sec.	Reach2US	3170 BR U	500YR	300.4	10.48	5.61	6.7	9.36	3.05	3.2	1840.2	1168.91	2234.89	18.76	68.36	104.21	191.3	0.004391
BR inside D/S Sec.	Reach2US	3170 BR D	500YR	300.2	10.24	5.74	6.99	8.72	2.91	3.1	1872.2	1072.04	2299.72	20.98	64.14	106.21	191.3	0.003891
D/s of Bridge Sec.	Reach2US	3074.92	500YR	300.2	10.21	5.7	7.29	6.75	2.29	2.7	1446.7	1153.95	2643.39	20.98	88.31	134.38	243.7	0.002339

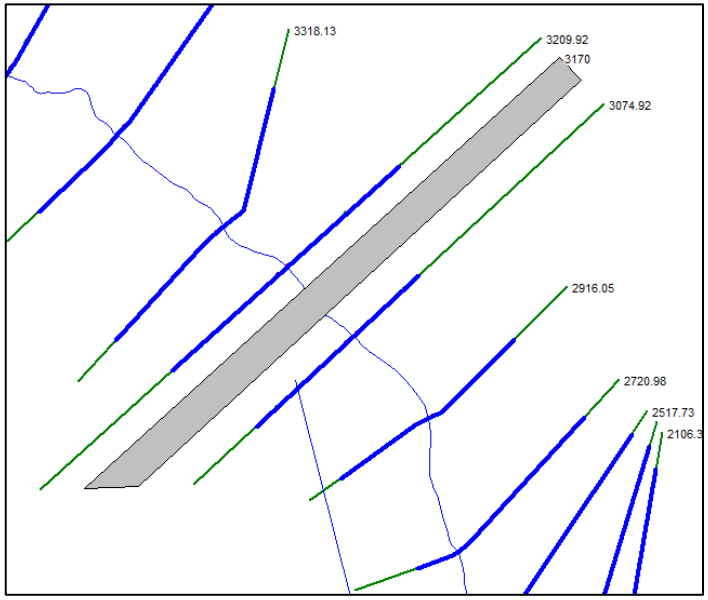

Received by VMRC September 1, 2020 /blh

Flow Tubes for Xsec just u/s of bridge

Reach2US RS: 3209.92 Profile: 500YR

	Pos	Left Sta	Right Sta	Flow	Area	W.P.	Percent	Hydr	Velocity	Shear	Power	
		(ft)	(ft)	(cfs)	(sq ft)	(ft)	Conv	Depth(ft)	(ft/s)	(lb/sq ft)	(lb/ft s)	
1	LOB	244.67	275.25	0	3.57	8.36	0	0.43	0	0.04	0	
2	LOB	275.25	305.83	0	56.62	30.64	0	1.85	0	0.19	0	
3	LOB	305.83	336.42	0	56.04	30.61	0	1.83	0	0.19	0	
4	LOB	336.42	367	0	61.93	30.65	0	2.02	0	0.21	0	
5	LOB	367	402.79	223.05	148.3	35.94	4.25	4.14	1.5	0.42	0.63	
6	LOB	402.79	438.57	424.9	218.2	35.88	8.1	6.1	1.95	0.62	1.21	L Abut
7	LOB	438.57	474.36	567.34	259.6	35.91	10.82	7.25	2.19	0.74	1.61	
8	Chan	474.36	493.12	1231.8	208	22.23	23.49	11.08	5.92	0.95	5.65	
9	ROB	493.12	522.56	494.99	218.4	29.74	9.44	7.42	2.27	0.75	1.7	pier
10	ROB	522.56	552	556.11	233.4	29.47	10.6	7.93	2.38	0.81	1.92	
11	ROB	552	581.45	599.9	244.1	29.44	11.44	8.29	2.46	0.85	2.08	
12	ROB	581.45	610.89	560.3	234.4	29.48	10.68	7.96	2.39	0.81	1.94	R Abut
13	ROB	610.89	640.33	585.62	240.7	29.46	11.17	8.17	2.43	0.83	2.03	
14	ROB	640.33	670.32	0	211	30.27	0	7.04	0	0.71	0	
15	ROB	670.32	700.31	0	60.39	23.25	0	2.67	0	0.26	0	

Plan: Prop NorthFork Broad Reach2US RS: 3170 BR U Profile: 500YR

	Pos	Left Sta	Right Sta	Flow	Area	W.P.	Percent	Hydr	Velocity	Shear	Power	
		(ft)	(ft)	(cfs)	(sq ft)	(ft)	Conv	Depth(ft)	(ft/s)	(lb/sq ft)	(lb/ft s)	
1	LOB	402.79	438.57	363.95	145.54	34.53	6.94	4.47	2.5	1.16	2.89	L Abut
2	LOB	438.57	474.36	804.97	238.02	35.91	15.35	6.65	3.38	1.82	6.15	
3	Chan	474.36	493.12	1840.18	196.63	22.23	35.09	10.48	9.36	2.42	22.69	
4	ROB	493.12	522.56	443.19	173.53	39.21	8.45	6.82	2.55	1.21	3.1	
5	ROB	522.56	552	769.72	215.6	29.47	14.68	7.32	3.57	2.01	7.16	
6	ROB	552	581.45	835.36	226.36	29.44	15.93	7.69	3.69	2.11	7.78	
7	ROB	581.45	610.89	186.62	83.16	22.81	3.56	4.18	2.24	1	2.24	R Abut

Received by VMRC September 1, 2020 /blh

Flow Tubes for Approach Xsec

Plan: Prop NorthFork Broad Reach2US RS: 3318.13 Profile: 500YR

	Pos	Left Sta	Right Sta	Flow	Area	W.P.	Percent	Hydr	Velocity	Shear	Power	
		(ft)	(ft)	(cfs)	(sq ft)	(ft)	Conv	Depth(ft)	(ft/s)	(lb/sq ft)	(lb/ft s)	
1	LOB	75.44	94.3	0.92	3.75	8.8	0.02	0.43	0.25	0.03	0.01	Inactive
2	LOB	94.3	113.16	13.68	25.7	18.88	0.26	1.36	0.53	0.09	0.05	Inactive
3	LOB	113.16	132.02	27.73	39.26	18.87	0.53	2.08	0.71	0.14	0.1	Inactive
4	LOB	132.02	150.87	44.22	51.93	18.87	0.84	2.75	0.85	0.19	0.16	Inactive
5	LOB	150.87	169.73	63.01	64.3	18.93	1.2	3.41	0.98	0.24	0.23	Active
6	LOB	169.73	188.59	121.4	95.26	18.91	2.31	5.05	1.27	0.35	0.45	Active
7	LOB	188.59	207.45	156.9	111	18.87	2.99	5.89	1.41	0.41	0.58	Active
8	LOB	207.45	226.31	188.7	124.1	18.9	3.6	6.58	1.52	0.46	0.69	Active
9	LOB	226.31	245.17	214.4	133.9	18.86	4.09	7.1	1.6	0.49	0.79	Active
10	LOB	245.17	264.03	227.2	138.6	18.86	4.33	7.35	1.64	0.51	0.84	Active
11	LOB	264.03	282.89	243.3	145.3	19.13	4.64	7.7	1.68	0.53	0.88	Active
12	Chan	282.89	309.59	1223	264.7	30.84	23.32	9.91	4.62	0.6	2.76	Active
13	ROB	309.59	328.53	240.8	134.5	18.95	4.59	7.1	1.79	0.49	0.88	Active
14	ROB	328.53	347.46	255.6	139.3	18.94	4.87	7.36	1.83	0.51	0.94	Active
15	ROB	347.46	366.4	275.5	145.7	18.94	5.25	7.7	1.89	0.54	1.01	Active
16	ROB	366.4	385.33	288	149.6	18.94	5.49	7.9	1.92	0.55	1.06	Active
17	ROB	385.33	404.27	293.3	151.3	18.94	5.59	7.99	1.94	0.56	1.08	Active
18	ROB	404.27	423.2	295.7	152.1	18.94	5.64	8.03	1.94	0.56	1.09	Active
19	ROB	423.2	442.14	293.3	151.3	18.94	5.59	7.99	1.94	0.56	1.08	Active
20	ROB	442.14	461.07	266.7	142.9	18.94	5.09	7.55	1.87	0.52	0.98	Active
21	ROB	461.07	480.01	253.7	138.7	18.94	4.84	7.33	1.83	0.51	0.93	Active
22	ROB	480.01	498.94	206.5	122.8	19.04	3.94	6.49	1.68	0.45	0.75	Active
23	ROB	498.94	517.88	50.47	51.55	17.97	0.96	3.02	0.98	0.2	0.2	Inactive

Received by VMRC September 1, 2020 /blh

Projection of abutments upstream

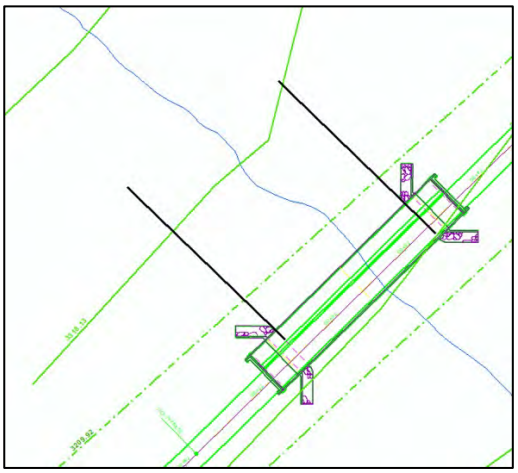

Table of overbank flow obstruction

	Approach Section	
	LOB	ROB
water edge	85.54	516.01
Projected station of Abut to approach	206	391
Flow in approach section overbank obstructed by abutment	415.73	1454.2
Flow area of approach section overbank obstructed by abutment	382.69	804.6771
Length of embankment projected normal to the flow	120.46	125.01
Length of active flow obstructed by abutment projected into flow	55.13	107.94

Cross Section Output for BR U

Plan: Prop NorthFork Broad Reach2US RS: 3170 BR U Profile: 500YR					
E.G. Elev (ft)	300.93	Element	Left OB	Channel	Right OB
Vel Head (ft)	0.58	Wt. n-Val.	0.1	0.045	0.1
W.S. Elev (ft)	300.36	Reach Len. (ft)	47.67	47.67	47.67
Crit W.S. (ft)	297.48	Flow Area (sq ft)	383.56	196.63	698.66
E.G. Slope (ft/ft)	0.00439	Area (sq ft)	383.56	196.63	698.66
Q Total (cfs)	5244	Flow (cfs)	1168.9	1840.18	2234.9
Top Width (ft)	191.33	Top Width (ft)	68.36	18.76	104.21
Vel Total (ft/s)	4.1	Avg. Vel. (ft/s)	3.05	9.36	3.2
Max Chl Dpth (ft)	11.41	Hydr. Depth (ft)	5.61	10.48	6.7
Conv. Total (cfs)	79136	Conv. (cfs)	17640	27769.8	33726.3
Length Wtd. (ft)	47.67	Wetted Per. (ft)	70.44	22.23	120.93
Min Ch El (ft)	288.95	Shear (lb/sq ft)	1.49	2.42	1.58
Alpha	2.21	Stream Power (lb/ft s)	4.55	22.69	5.07
Frctn Loss (ft)	0.2	Cum Volume (acre-ft)	79.36	26.7	40.53
C & E Loss (ft)	0.03	Cum SA (acres)	15.34	2.7	7.12

Received by VMRC September 1, 2020 /blh

Project Name:	Hartland	Discharge Tr:	500-Year
Structure Name:	North Bridge	Engineer:	K.Z.
Stream Name:	North Fork- Broad Run	Date:	02/13/20

Type of Contraction Scour

$$V_c = 11.17 \times y_1^{1/6} \times D_{50}^{1/3}$$

APPROACH MAIN CHANNEL		
Description of Variable	Symbol	Value
User Entered Variables		
Median diameter of bed material, mm	D_{50} =	0.26
Average depth (hydraulic depth) of flow in the main channel of the approach section, ft	y_1 =	9.91
Average velocity of flow in the main channel, ft/s	V_1 =	4.62
Calculated Results		
Maximum between Median diameter of bed material and lower limit (0.2 mm), ft	D_{50} =	0.000853
Critical velocity of bed material, ft/s	V_c =	1.55
Type of contraction scour for main channel		**Live Bed Scour**
APPROACH LEFT OVERBANK		
User Entered Variables		
Median diameter of bed material, mm	D_{50} =	0.04
Average depth (hydraulic depth) of flow in the left overbank of the approach section, ft	y_1 =	4.73
Average velocity of flow in the left overbank, ft/s	V_1 =	1.39
Calculated Results		
Maximum between Median diameter of bed material and lower limit (0.2 mm), ft	D_{50} =	0.000656
Critical velocity of bed material, ft/s	V_c =	1.26
Type of contraction scour for left overbank		**Live Bed Scour**
APPROACH RIGHT OVERBANK		
User Entered Variables		
Median diameter of bed material, mm	D_{50} =	0.02
Average depth (hydraulic depth) of flow in the right overbank of the approach section, ft	y_1 =	7.17
Average velocity of flow in the right overbank, ft/s	V_1 =	1.84
Calculated Results		
Maximum between Median diameter of bed material and lower limit (0.2 mm), ft	D_{50} =	0.000656
Critical velocity of bed material, ft/s	V_c =	1.35
Type of contraction scour for right overbank		**Live Bed Scour**

Comments (specify cross sections used, parameters estimated, assumptions, etc.):

D50 channel =0.26 mm from NB-5, D50 LOB= 0.04 from NB-1, D50 ROB= 0.02 from NB-2.
Minimum D50 of 0.2 mm used in calculations.
Approach Section is XS 3318.13. All y1 and V1 values from Hydraulic Parameters Table.

Received by VMRC September 1, 2020 /blh

Project Name:	Hartland	Discharge Tr:	500-Year
Structure Name:	North Bridge	Engineer:	K.Z.
Stream Name:	North Fork- Broad Run	Date:	02/13/20

Live Bed Contraction Scour - Modified Laursen

MAIN CHANNEL SECTION

$$y_s = y_1 \times \left(\frac{Q_2}{Q_1}\right)^{6/7} \times \left(\frac{W_1}{W_2}\right)^{k_1} - y_o$$

	Description of Variable	Symbol	Value
	User Entered Variables		
Approach Section	Slope of energy gradeline of main channel of approach section, ft/ft	S_1 =	0.001114
Approach Section	Median diameter of bed material, mm	D_{50} =	0.260
Approach Section	Discharge in the main channel of the approach section, cfs	Q_1 =	1223.12
Approach Section	Average depth (hydraulic depth) of flow in the main channel of the approach section, ft	y_1 =	9.91
Approach Section	Bottom (or Top) width of approach main channel, ft	W_1 =	26.70
Bridge Section	Bottom (or Top) width of main channel in bridge section minus piers, ft	W_2 =	18.76
Bridge Section	Discharge in the main channel of the bridge section, cfs	Q_2 =	1840.2
Bridge Section	Existing average depth (hydraulic depth) in the main channel of bridge before scour, ft	y_o =	10.48
	Calculated Variables		
	Fall velocity of channel bed material, fps (based on curve fitting to Figure 6.8 for 20° C)	ω =	0.12
	Shear velocity in the approach section main channel, ft/s	V_* =	0.60
	Mode of bed material transport coefficient for the main channel	k_1 =	0.69
	Calculated Results		
	Average depth in the main channel of the bridge section after scour, ft	y_2 =	17.94
	Average depth of scour in the main channel of the bridge section, ft	y_s =	**7.46**

Comments (specify cross sections used, parameters estimated, assumptions, etc.):

D50 channel =0.26 mm from NB-5. XS 3318 is approach section. XS 3170 BR U used as bridge section.

Top widths used in calculations.

S1,Q1,y1,W1,Q2 ,W2, y0 from Hydraulic Parameters table. W2 has no piers within it.

Received by VMRC September 1, 2020 /blh

Project Name:	Hartland	Discharge Tr:	500-Year
Structure Name:	North Bridge	Engineer:	K.Z.
Stream Name:	North Fork- Broad Run	Date:	02/13/20

Live Bed Contraction Scour - Modified Laursen

LEFT OVERBANK

$$y_s = y_1 \times \left(\frac{Q_2}{Q_1}\right)^{6/7} \times \left(\frac{W_1}{W_2}\right)^{k_1} - y_o$$

	Description of Variable	Symbol	Value
	User Entered Variables		
Approach Section	Slope of energy gradeline of LOB of approach section, ft/ft	S_1 =	0.001114
Approach Section	Median diameter of bed material, mm	D_{50} =	0.0390
Approach Section	Discharge in the LOB of the approach section, cfs	Q_1 =	1301.41
Approach Section	Average depth (hydraulic depth) of flow in the LOB of the approach section, ft	y_1 =	4.73
Approach Section	Bottom (or Top) width of approach LOB, ft	W_1 =	197.34
Bridge Section	Bottom (or Top) width of LOB in bridge section minus piers, ft	W_2 =	68.36
Bridge Section	Discharge in the LOB of the bridge section, cfs	Q_2 =	1168.91
Bridge Section	Existing average depth (hydraulic depth) of flow in the LOB of bridge before scour, ft	y_o =	5.61
	Calculated Variables		
	Fall velocity of LOB material, fps (based on curve fitting to Figure 6.8 for 20° C)	ω =	0.01
	Shear velocity in the approach section LOB, ft/s	V_* =	0.41
	Mode of bed material transport coefficient for the LOB	k_1 =	0.69
	Calculated Results		
	Average depth in the LOB of the bridge section after scour, ft	y_2 =	8.97
	Average depth of scour in the LOB of the bridge section, ft	y_s =	**3.36**

Comments (specify cross sections used, parameters estimated, assumptions, etc.):

D50 LOB= 0.04 from NB-1. XS 3318 is approach section. XS 3170 BR U used as bridge section.

S1,Q1,y1,W1,Q2 ,W2, y0 from Hydraulic Parameters table. W2 has no pier in it.

Received by VMRC September 1, 2020 /blh

Project Name:	Hartland	Discharge Tr:	500-Year
Structure Name:	North Bridge	Engineer:	K.Z.
Stream Name:	North Fork- Broad Run	Date:	02/13/20

Live Bed Contraction Scour - Modified Laursen

RIGHT OVERBANK

$$y_s = y_1 \times \left(\frac{Q_2}{Q_1}\right)^{6/7} \times \left(\frac{W_1}{W_2}\right)^{k_1} - y_o$$

	Description of Variable	Symbol	Value
	User Entered Variables		
Approach Section	Slope of energy gradeline of ROB of approach section, ft/ft	S_1 =	0.001114
Approach Section	Median diameter of bed material, mm	D_{50} =	0.0200
Approach Section	Discharge in the ROB of the approach section, cfs	Q_1 =	2719.47
Approach Section	Average depth (hydraulic depth) of flow in the ROB of the approach section, ft	y_1 =	7.17
Approach Section	Bottom (or Top) width of approach ROB, ft	W_1 =	206.42
Bridge Section			
Bridge Section	Bottom (or Top) width of ROB in bridge section minus piers, ft	W_2 =	100.21
Bridge Section	Discharge in the ROB of the bridge section, cfs	Q_2 =	2234.89
Bridge Section	Existing average depth (hydraulic depth) of flow in the ROB of bridge before scour, ft	y_o =	6.70
	Calculated Variables		
	Fall velocity of ROB material, fps (based on curve fitting to Figure 6.8 for 20° C)	ω =	0.00
	Shear velocity in the approach section ROB, ft/s	V_* =	0.51
	Mode of bed material transport coefficient for the ROB	k_1 =	0.69
	Calculated Results		
	Average depth in the ROB of the bridge section after scour, ft	y_2 =	9.98
	Average depth of scour in the ROB of the bridge section, ft	y_s =	**3.28**

Comments (specify cross sections used, parameters estimated, assumptions, etc.):

D50 ROB= 0.02 from NB-2. XS 3318 is approach section. XS 3170 BR U used as bridge section.

S1,Q1,y1,W1,Q2 ,W2, y0 from Hydraulic Parameters table.

Top widths used in calculations. Pier width of 4 ft. deducted from W2: 104.21- 4 = 100.21

Received by VMRC September 1, 2020 /blh

Project Name:	Hartland	Discharge Tr:	500-Year
Structure Name:	North Bridge	Engineer:	K.Z.
Stream Name:	North Fork- Broad Run	Date:	02/13/20

Pier Scour - Modified CSU

PIER 1

$$y_s = 2.0 \times y_1 \times K_1 \times K_2 \times K_3 \times \left(\frac{a}{y_1}\right)^{0.65} \times Fr_1^{0.43}$$

Description of Variable	Symbol	Value
User Entered Variables		
Mean velocity of flow directly upstream of pier, ft/s	V_1 =	5.92
Flow depth directly upstream of pier, ft	y_1 =	11.08
Pier width, ft	a =	4.00
Pier length, ft	L =	48.00
Angle of attack of flow, degrees	θ =	0
Correction factor for pier nose shape, see Fig 7.3 here Round Nose	K_1 =	1.0
Correction factor for bed condition Small Dunes	K_3 =	1.1
checking box applies max. scour depth control, use only If pier is round nose and aligned with flow and pressure flow not considered	☑	
Median diameter of bed material in front of the pier, mm	D_{50} =	0.0215
Diameter of Bed material of which 84% are smaller, mm, Only needed for Coarse Bed Material Correction	D_{84} =	0.44
Is the pier facing clear-water flow conditions?	☐	
Coarse bed? According to your Input: Coarse Bed material Conditions don't Apply	☐	
Very Wide Piers? According to your Input: Very Wide Pier Conditions Don't Apply	☐	
Calculated Variables		
Correction factor for angle of attack of flow	K_2 =	1.00
Froude Number directly upstream of the pier	Fr_1 =	0.31
The approach velocity required to initiate scour at pier for D_{50}, ft/s	V_{cD50} =	0.69
Sediment gradation coefficient = D_{84}/D_{50}	σ=	20.47
Densimetric particle Froude Number	H=	96.70
Pier Scour in Coarse Bed Material	Coarse Material y_s =	Not Calculated
Max. scour depth if you have round nose pier aligned with flow, ft	Max. y_s =	9.60
Pier Scour Correction Factor for very Wide Piers in Shallow Flow	K_w=	Not Used
Calculated Results		
Average depth of scour in the main channel of the bridge section, ft	y_s =	**7.63**
Top Width of scour hole on either side of the pier, ft	W =	**15.27**

Comments (specify cross sections used, parameters estimated, assumptions, etc.):

Due to proximity of pier to main channel V1 and y1 are set using average channel values for XS 3209.92 just u/s of bridg from Hydraulic Parameters Table.
D50 at pier location = 0.02 & D84= 0.44 from NB-2. Pier L was set 48' assuming one continuous pier through structure.
Angle of attack was set to zero because pier is aligned with flow direction.

Received by VMRC September 1, 2020 /blh

Project Name:	Hartland	Discharge Tr:	500-Year
Structure Name:	North Bridge	Engineer:	K.Z.
Stream Name:	North Fork- Broad Run	Date:	02/13/20

NCHRP 24-20 Abutment Scour for Conditions (a) & (b)

Left Abutment

$$y_{\max} = \alpha_A y_c \quad or \quad y_{\max} = \alpha_B y_c \quad and \quad y_s = y_{\max} - y_0$$

Description of Variable	Symbol	Value
Common User Entered Variables		
Projected length of left embankment on approach Section, ft	L=	120.46
Width of the left floodplain of approach section, ft	B_f=	197.34
L/Bf <0.75, so scour condition (b) & clear-water contraction scour apply ; provide input variables for Condition (b)		
Condition (b) User Entered Variables	Wingwall	
Left overbank median particle size (a minimum of 0.2 mm is used in calculations), mm	D_{50}=	0.04
Discharge in the LOB of the approach section, cfs	Q_{ob}=	1301.41
Unit discharge in the constricted opening accounting for non-uniform flow distribution, cfs/ft	q_{2f} =	17.77
Left abutment flow depth before scour (bridge section at abutment location), ft	y_o=	4.47
Select between spill-through and wingwall abutmenst for clear-water conditions	Wingwall	
Common Calculated Variables		
Ratio of L to B_f	L/B_f=	0.61
Condition (b) Calculated Variables		
Unit discharge in LOB of approach section, cfs/ft	q_f =	6.59
Flow depth including clear-water contraction scour, ft	y_c=	12.09
Ratio of the unit discharges, to enter X-axis on Figure 8.11 or 8.12	q_{2f}/q_f=	2.70
Scour Amplification factor from Figure 8.11 or 8.12	α_B=	1.59
Maximum flow depth resulting from abutment scour, ft	y_{max} =	19.22
Left Abutment scour depth, ft	y_s =	14.75
Final Results		
Maximum flow depth resulting from abutment scour, ft	y_{max} =	19.22
Left Abutment scour depth, ft	**y_s =**	**14.75**

Comments (specify cross sections used, parameters estimated, assumptions, etc.):

D50 LOB= 0.04 from NB-1, Minimum D50 of 0.2 mm used in calculations. XS 3318 = approach section.

XS 3170 BR U = bridge sec. L from Table of overbank flow obstruction, Bf & Qob from Hydraulic Parameters table.

Set-back L= L bank st.- abut. st. (474.36-406), bank stations in model = 68.36'.

Chann Hyd. Depth for BR inside U/S Sec. (XS 3170 BR U) in Hydraulic Parameters table = 10.48.

SBR=Set-back Length/chann Hyd Depth = 68.36/10.48 (from above)= 6.52.

SBR> 5 for both abuts.: Case b applies for estimating q2f.

q2f= Overbank (Q/A) x floodplain Hyd. Depth= (1215.26/383.56) x 5.61= 17.77 cfs/ft.

"A" from table of Cross Section Output for BR U, Q and Hydr Depth L from Hydraulic Parameters Table.

y0 from Flow Tubes 1 for RS: 3170 BR U= 4.47'.

Received by VMRC September 1, 2020 /blh

NCHRP 24-20 Abutment Scour for Conditions (a) & (b)

Right Abutment

$$y_{\max} = \alpha_A y_c \quad or \quad y_{\max} = \alpha_B y_c \quad and \quad y_s = y_{\max} - y_0$$

Description of Variable	Symbol	Value
Common User Entered Variables		
Projected length of right embankment on approach Section, ft	L=	125.01
Width of the right floodplain of approach section, ft	B_f=	206.42
L/Bf <0.75, so scour condition (b) & clear-water contraction scour apply ; provide input variables for Condition (b)		
Condition (b) User Entered Variables	Wingwall	
right overbank median particle size (a minimum of 0.2 mm is used in calculations), mm	D_{50}=	0.02
Discharge in the ROB of the approach section, cfs	Q_{ob}=	2719.47
Unit discharge in the constricted opening accounting for non-uniform flow distribution, cfs/ft	q_{2f} =	26.82
Right abutment flow depth before scour (bridge section at abutment location), ft	y_o=	4.18
Select between spill-through and wingwall abutmenst for clear-water conditions	Wingwall	
Common Calculated Variables		
Ratio of L to B_f	L/B_f=	0.61
Condition (b) Calculated Variables		
Unit discharge in ROB of approach section, cfs/ft	q_f =	13.17
Flow depth including clear-water contraction scour, ft	y_c=	17.20
Ratio of the unit discharges, to enter X-axis on Figure 8.11 or 8.12	q_{2f}/q_f=	2.04
Scour Amplification factor from Figure 8.11 or 8.12	α_B=	1.95
Maximum flow depth resulting from abutment scour, ft	y_{max} =	33.46
Right Abutment scour depth, ft	y_s =	29.28
Final Results		
Maximum flow depth resulting from abutment scour, ft	y_{max} =	33.46
Right Abutment scour depth, ft	**y_s =**	**29.28**

Comments (specify cross sections used, parameters estimated, assumptions, etc.):

D50 ROB= 0.02 from NB-2, Minimum D50 of 0.2 mm used in calculations. XS 3318 = approach section.

XS 3170 BR U = bridge sec. L from Table of overbank flow obstruction, Bf & Qob from Hydraulic Parameters table.

Set-back L= R Abut Sta- R Bank Sta (601.33-493.12), bank stations in model = 108.21'.

Chann Hyd. Depth for BR inside U/S Sec. (XS 3170 BR U) in Hydraulic Parameters table =10.48'.

SBR=Set-back Length/chann Hyd Depth = 108.21/10.48 (from above)= 10.32.

SBR> 5 for both abuts.: Case b applies for estimating q2f.

q2f= Overbank (Q/A) x floodplain Hyd. Depth= (2796.92/698.66) x6.7= 26.82 cfs/ft.

"A" from table of Cross Section Output for BR U, Q and Hydr Depth R from Hydraulic Parameters Table.

y0 from Flow Tubes 7 for RS: 3170 BR U= 4.18'.

Received by VMRC September 1, 2020 /blh

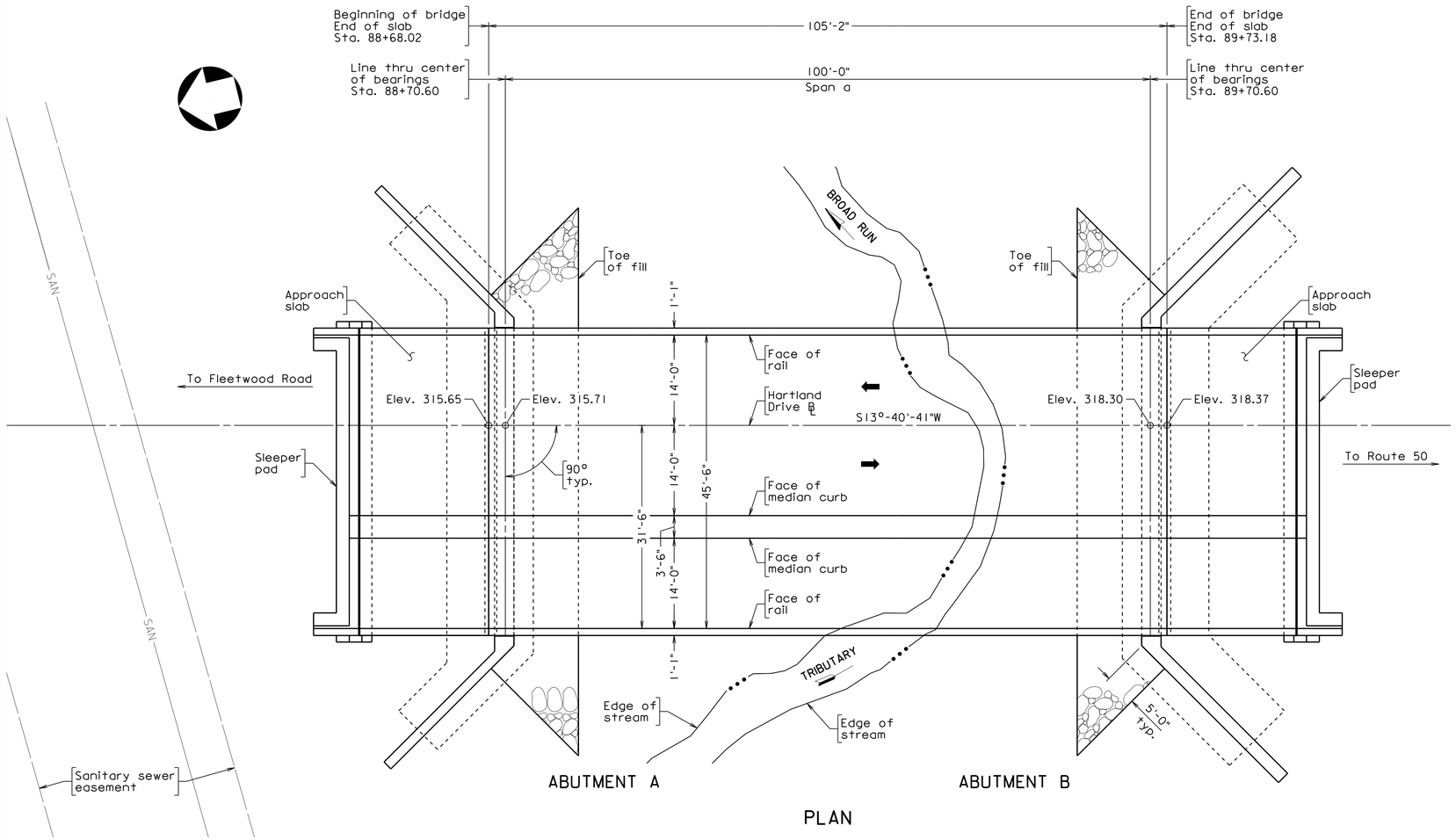

PLAN

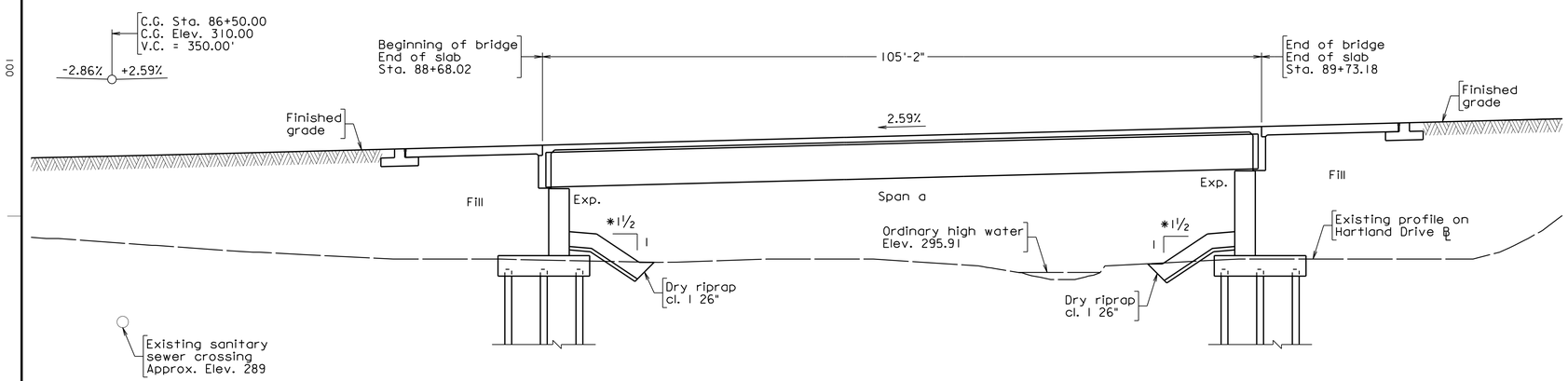

*Normal to abutment

DEVELOPED SECTION ALONG ℄

Scale: 1" = 10'

DESIGN EXCEPTION(S):

None.

GENERAL NOTES:

Width: 45'-6" face-to-face of rails.

Span layout: 100'-0" prestressed concrete 53" deep bulb-T beam span.

Capacity: HL-93 loading.

Drainage area: 1.04 sq. mi.

Specifications:

Construction: Virginia Department of Transportation Road and Bridge Specifications, 2016.

Design: AASHTO LRFD Bridge Design Specifications, 8th Edition, 2017; and VDOT Modifications.

Standards: Virginia Department of Transportation Road and Bridge Standards, 2016; including all current revisions.

These plans are incomplete unless accompanied by the Supplemental Specifications and Special Provisions included in the contract documents.

Design loading includes 20 psf allowance for construction tolerances and construction methods.

Design loading includes 15 psf allowance for future wearing surface.

Concrete in deck, medians, rails, terminal walls and integral backwalls shall be Low Shrinkage Class A4 Modified in accordance with Section 217.12(a). Concrete in abutment neats and footings shall be Class A3.

Prestressed concrete in bulb-T beams shall be Class A5 having a minimum compressive cylinder strength at 28 days equal to 8,000 psi and a minimum compressive cylinder strength at time of release of strands equal to 6,400 psi.

All reinforcing steel shall be deformed and shall conform to ASTM A615, Grade 60 except for steels noted as Corrosion Resistant Reinforcing (CRR) which shall conform to Section 223 of the Specifications. All reinforcing bar dimensions on the detailed drawings are to centers of bars except where otherwise noted and are subject to fabrication and construction tolerances.

CRR steels shall conform to one or more of the three Classes listed in Section 223 of the Specifications. The Class of CRR steel required on this project is noted on plan sheets. CRR Steel, Class II or Class III may be substituted for Class I.

Prestressing strands shall be uncoated, seven-wire, low-relaxation steel strands conforming to ASTM A416 Grade 270.

All H-piles shall be ASTM A709 Grade 50 steel and shall be installed in pre-bored holes. For minimum rock socket lengths and estimated tip elevations, see Pile Data Tables on sheets 8 and 16.

The Bridge Data Plate shall be installed in accordance with VDOT's Road and Bridge Standards and obtained from the District Structure and Bridge Office.

BM: Benchmark #2 N 7036064.95814 E 11745963.74437. See sheet 8 of 35 in Roadway Plans.

PRELIMINARY PLANS

THESE PLANS NOT TO BE USED FOR CONSTRUCTION

Dewberry

Dewberry Engineers Inc.
8401 ARLINGTON BLVD.
FAIRFAX, VA 22031
PHONE: 703.849.0100
FAX: 703.849.0518

HARTLAND DRIVE OVER BROAD RUN TRIBUTARY
LOUDOUN COUNTY
CPAP-2020-0009

SEAL

DEWBERRY ENGINEERS INC.
FAIRFAX, VA
STRUCTURAL ENGINEER

No.	DATE	BY	Description

REVISIONS

DESIGNED BY TPV
DRAWN BY KLM
CHECKED BY JRB
DATE APRIL 2020

TITLE

TITLE SHEET: PLAN, PROFILE AND GENERAL NOTES

PROJECT NO. 50113885

XXX-XX

Received by VMRC September 1, 2020 /blh

ESTIMATED QUANTITIES - SUBSTRUCTURE ONLY

		Concrete Class A3 CY	Architectural Treatment SY	Reinforcing Steel LB	Steel Piles 12" LF	Pre-bore 24" LF	Rock Socket 24" LF	Struct. Excav. CY ⊗	Select Backfill (Abutment Zone) TON	Dry Riprap Class I 26" TON	Coffer dam EA	Geocomposite Wall Drain SY
Abutment A	Neat	XX	XX	XX	———	———	———	———	———	———	———	———
	Footing	XX	———	XX	XX	XX	XX	XX	XX	XX	XX	XX
Abutment B	Neat	XX	XX	XX	———	———	———	———	———	———	———	———
	Footing	XX	———	XX	XX	XX	XX	XX	XX	XX	XX	XX
Total		XX	XX	XX	XX	XX	XX	XX	XX	XX	XX	XX

⊗ Denotes items to be paid for on the basis of plan quantities in accordance with current Road and Bridge Specifications.

The cost of the T3 concrete shall be included in the price bid for Pre-bore 24" and Rock Socket 24".

ESTIMATED QUANTITIES - SUPERSTRUCTURE ONLY

Item	Units	Quantities
Concrete Low Shrinkage Class A4 Mod.	CY	XX
Corrosion Resistant Reinf. Steel, Class I ⊗	LB	XX
Railing, CPSR 2 Rails ⊗	LF	XX
Architectural Treatment ⊗	SY	XX
Prestressed Concrete Beam, Bulb-T 53" Depth + 100' - 110'	EA	XX
Adhesive Based Joint Sealer (Class I) 2½"	LF	XX
Cover Depth Survey ⊗	SY	XX
Bridge Deck Grooving ⊗	SY	XX
Elastic Inclusion (10")	SY	XX
Concrete Class A4 Bridge Appr. Slab ⊗	CY	XX
Reinf. Steel Bridge Approach Slab ⊗	LB	XX

LUMP SUM BID ITEMS

Mobilization	LS
Construction Surveying	LS

INDEX OF SHEETS

Sheet No.	Description
1	Title Sheet, Plan, Profile, Design Exceptions and General Notes
2	Estimated Quantities and Index of Sheets
3	Substructure Layout and Slope Protection
4	Abutment A Plan and Elevation
5	Abutment A Semi-Integral Backwall Plan and Elevation
6	Abutment A Footing Plan
7	Abutment A Sections and Details - 1
8	Abutment A Sections and Details - 2
9	Abutment A Wingwall Elevations
10	Abutment A Wingwall Sections
11	Abutment A Semi-Integral Backwall Sections
12	Abutment B Plan and Elevation
13	Abutment B Semi-Integral Backwall Plan and Elevation
14	Abutment B Footing Plan
15	Abutment B Sections and Details - 1
16	Abutment B Sections and Details - 2
17	Abutment B Wingwall Elevations
18	Abutment B Wingwall Sections
19	Abutment B Semi-Integral Backwall Sections
20	Prestressed Beam Bearing Details
21	Transverse Section and Details
22	Erection Diagram
23	Prestressed Concrete Bulb-T PCBT 53
24	Prestressed Concrete Bulb-T Miscellaneous Beam Details - 1
25	Prestressed Concrete Bulb-T Miscellaneous Beam Details - 2
26	Prestressed Concrete Bulb-T Intermediate Diaphragm Details
27	Top of Slab Elevations
28	Deck Slab Plan
29	42" - CPSR Railing with Architectural Treatment
30	CPSR Rail Splice Details
31	42" - CPSR Terminal Wall with Architectural Treatment - 1
32	42" - CPSR Terminal Wall with Architectural Treatment - 2
33	Architectural Treatment for CPSR Railing
34	Abutment A Approach Slab
35	Abutment B Approach Slab
36	Sleeper Pad and Joint Details
37	Engineering Geology - 1
38	Engineering Geology - 2
39	Engineering Geology - 3
40	Engineering Geology - 4
41	Engineering Geology - 5
42	Engineering Geology - 6
43	Engineering Geology - 7
44	Engineering Geology - 8
45	Engineering Geology - 9
46	Engineering Geology - 10
47	Engineering Geology - 11
48	Engineering Geology - 12
49	Engineering Geology - 13

Rev. No.	Sheets Revised	Date

TABLE OF REVISIONS

PRELIMINARY PLANS

THESE PLANS NOT TO BE USED FOR CONSTRUCTION

Dewberry

Dewberry Engineers Inc.
8401 ARLINGTON BLVD.
FAIRFAX, VA 22031
PHONE: 703.849.0100
FAX: 703.849.0518

HARTLAND DRIVE OVER BROAD RUN TRIBUTARY
LOUDOUN COUNTY
CPAP-2020-0009

SEAL

DEWBERRY ENGINEERS INC.
FAIRFAX, VA
STRUCTURAL ENGINEER

No.	DATE	BY	Description

REVISIONS

DESIGNED BY MM
DRAWN BY JPD
CHECKED BY JRB
DATE APRIL 2020

TITLE

ESTIMATED QUANTITIES AND INDEX OF SHEETS

PROJECT NO. 50113885

XXX-XX

SHEET NO. 2 of 49

002

Received by VMRC September 1, 2020 /blh

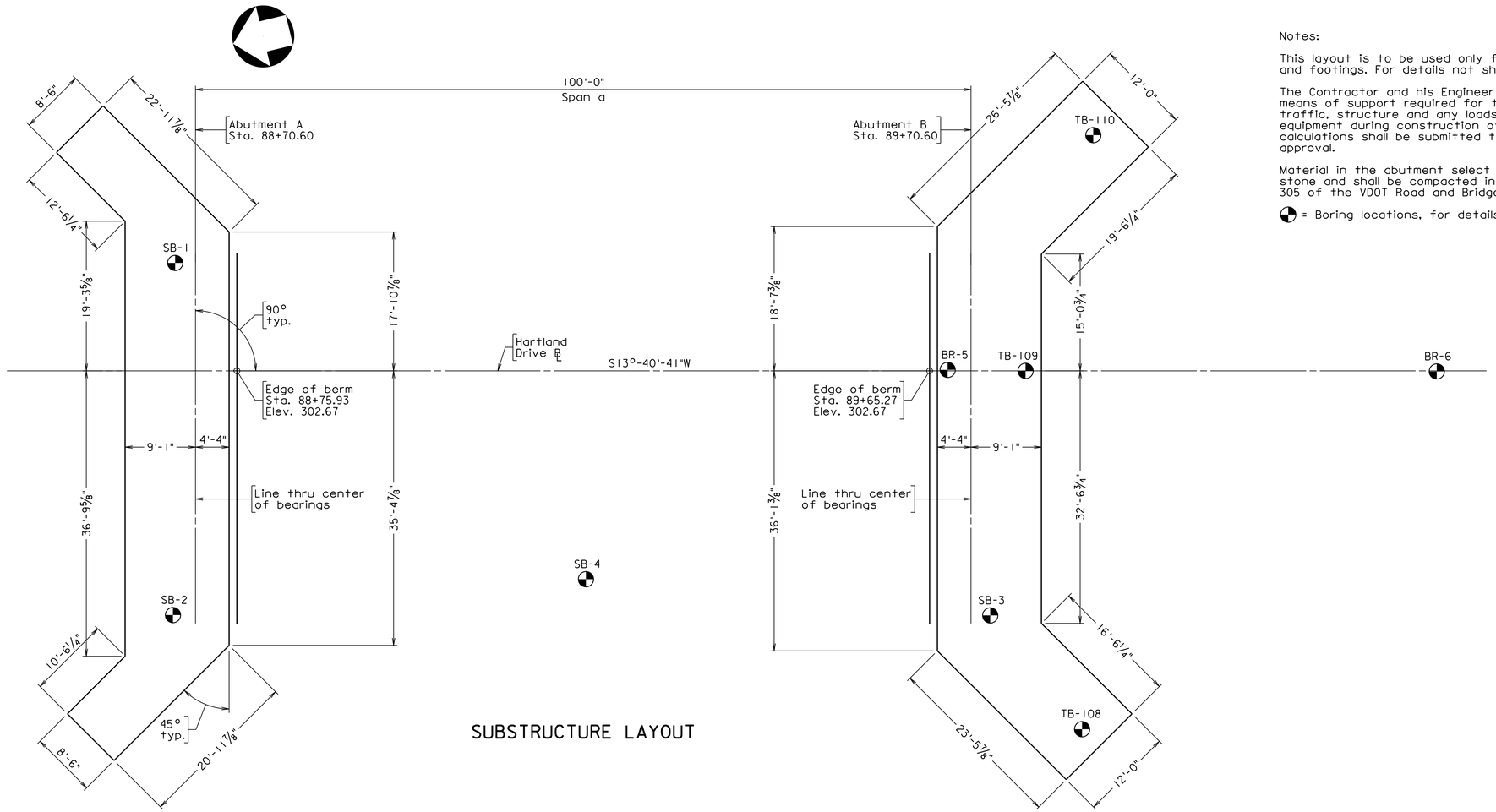

SUBSTRUCTURE LAYOUT

Notes:

This layout is to be used only for the purpose of locating fill slopes and footings. For details not shown, see abutment details.

The Contractor and his Engineer shall determine the methods and means of support required for the loads imposed by the roadway, traffic, structure and any loads imposed by the construction equipment during construction of the project. Working drawings and calculations shall be submitted to the Engineer for review and approval.

Material in the abutment select backfill zone shall be VDOT #2 or #3 stone and shall be compacted in accordance with Sections 303 and 305 of the VDOT Road and Bridge Specifications.

= Boring locations, for details see sheets 37 thru 49.

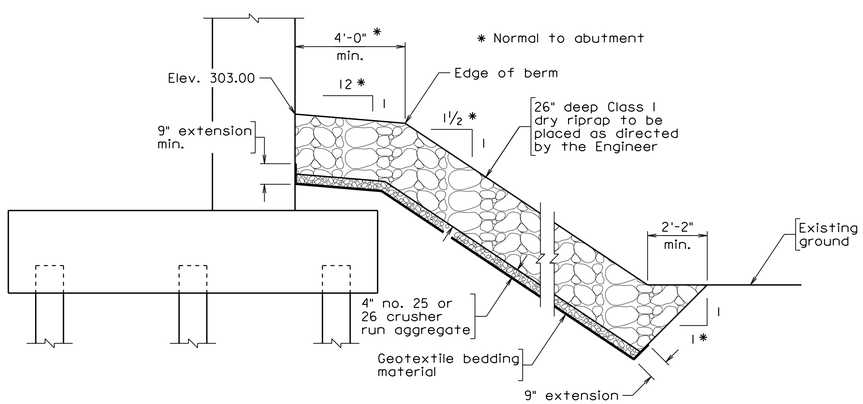

RIPRAP SLOPE PROTECTION

Not to scale

Scale: 1/8" = 1'-0" unless otherwise noted

PRELIMINARY PLANS

THESE PLANS NOT TO BE USED FOR CONSTRUCTION

003

Dewberry

Dewberry Engineers Inc.
8401 ARLINGTON BLVD.
FAIRFAX, VA 22031
PHONE: 703.849.0100
FAX: 703.849.0518

HARTLAND DRIVE
OVER
BROAD RUN TRIBUTARY
LOUDOUN COUNTY
CPAP-2020-0009

SEAL

DEWBERRY ENGINEERS INC.
FAIRFAX, VA
STRUCTURAL ENGINEER

No.	DATE	BY	Description

REVISIONS

DESIGNED BY KLM
DRAWN BY JPD
CHECKED BY PCA
DATE APRIL 2020

TITLE
SUBSTRUCTURE LAYOUT AND SLOPE PROTECTION

PROJECT NO. 50113885

XXX-XX

SHEET NO. 3 of 49

Received by VMRC September 1, 2020 /blh

Notes:

For details of semi-integral backwall, see sheets 5 and 11.

For wingwall details, see sheets 9 and 10.

E.F. denotes each face

N.F. denotes near face

F.F. denotes far face

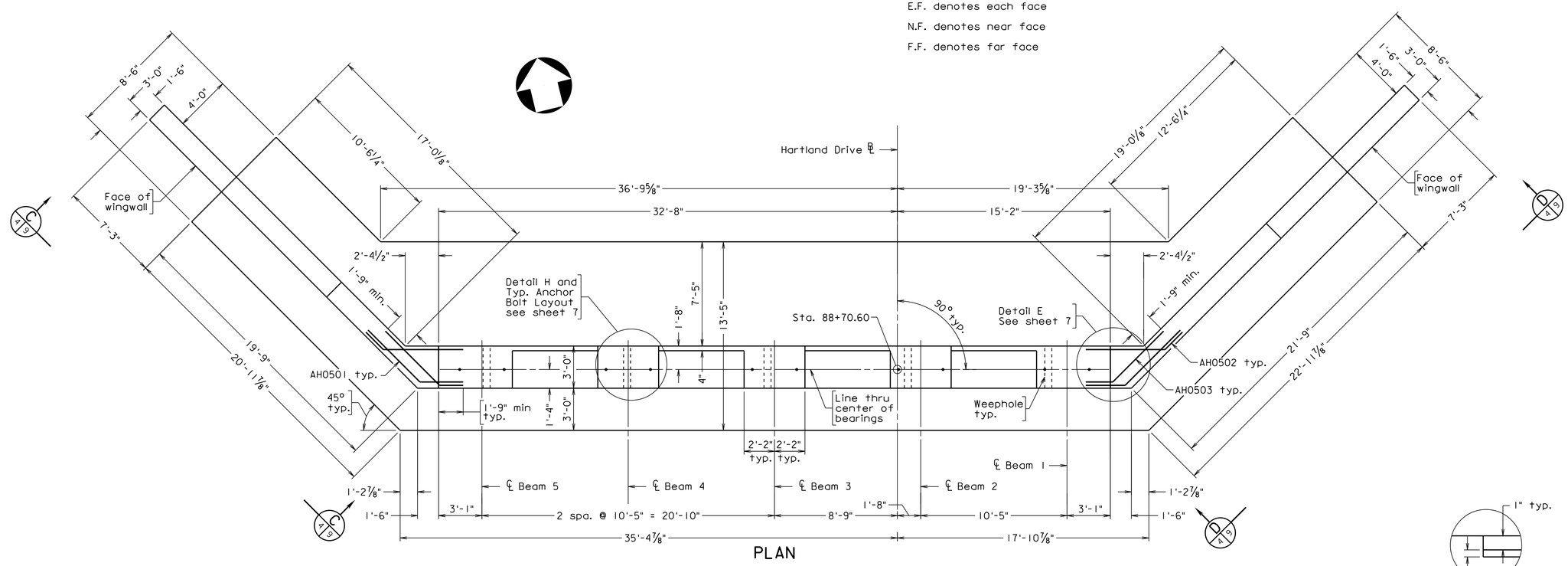

PLAN

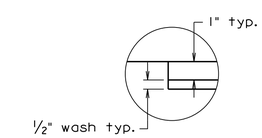

DETAIL 1

Scale: 3" = 1'-0"

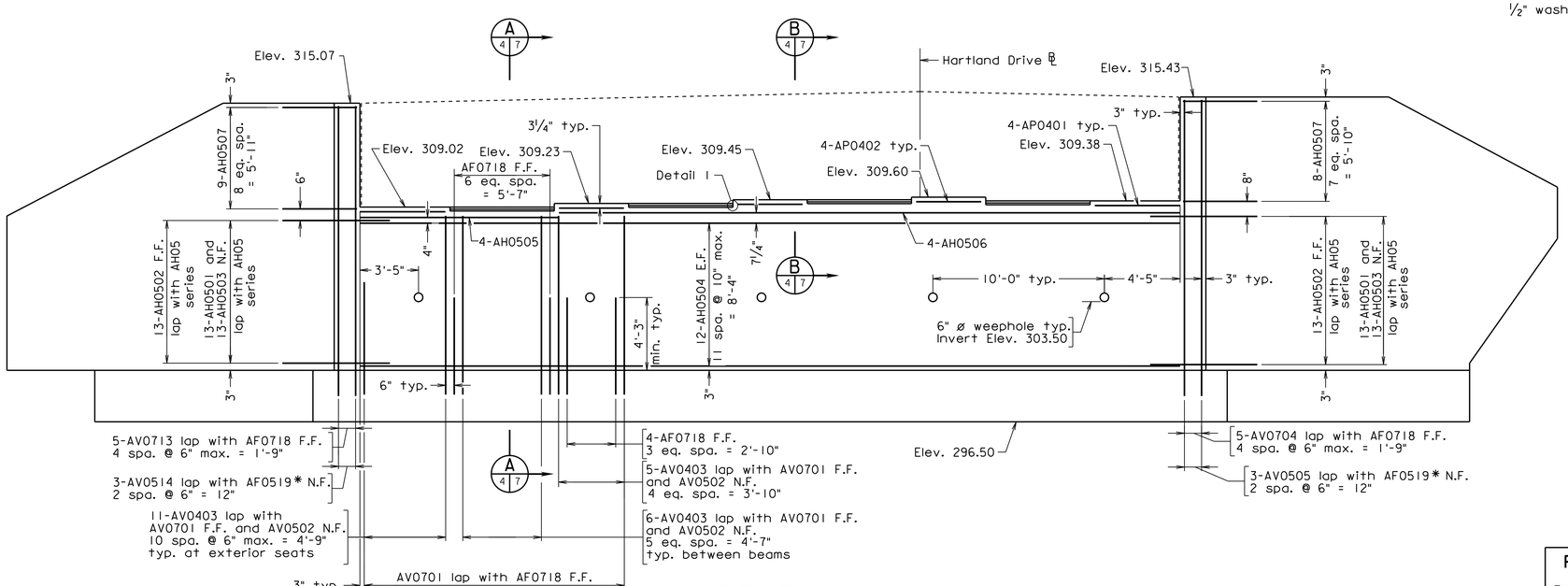

ELEVATION

Piles not shown

*Minimum Lap = 1'-9"

Scale: ¼" = 1'-0" unless otherwise noted

PRELIMINARY PLANS

THESE PLANS NOT TO BE USED FOR CONSTRUCTION

Dewberry

Dewberry Engineers Inc.
8401 ARLINGTON BLVD.
FAIRFAX, VA 22031
PHONE: 703.849.0100
FAX: 703.849.0518

HARTLAND DRIVE OVER BROAD RUN TRIBUTARY

LOUDOUN COUNTY

CPAP-2020-0009

SEAL

DEWBERRY ENGINEERS INC. FAIRFAX, VA STRUCTURAL ENGINEER

No.	DATE	BY	Description

REVISIONS

DESIGNED BY	TPV
DRAWN BY	TPV
CHECKED BY	PCA
DATE	APRIL 2020

TITLE

ABUTMENT A PLAN AND ELEVATION

PROJECT NO. 50113885

XXX-XX

SHEET NO. 4 of 49

004

Received by VMRC September 1, 2020 /blh

Notes:

Integral backwall concrete shall be placed and cured to a minimum compressive strength of 3000 psi prior to placement of deck concrete.

Backfill operations above seat level shall not be started until deck has been placed and cured to a minimum compressive strength of 3000 psi. Backfill shall be placed such that the differential in fill height between both abutments does not exceed 6" after compaction.

For details of holes through the web and location and number of BC series bars, see sheet 25.

The integral backwalls shall be cast when the least thermal movement of the superstructure can be expected during the period of initial set of the concrete in the backwall, e.g. at dusk or during an expected uniformly cloudy day.

Forms for the backwall shall be attached to the beams only; the forms shall not be attached to or blocked against the abutment stem. The backwall and forms must be free to move in relation to the abutment.

All reinforcement in the abutment backwall shall be Corrosion Resistant Reinforcing Steel, Class I.

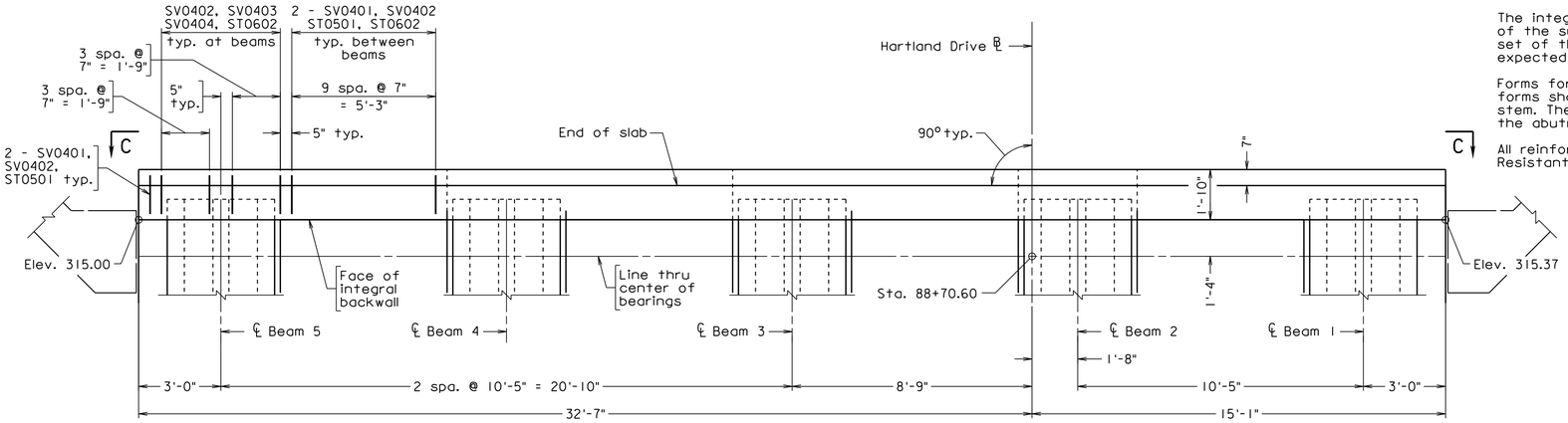

PLAN

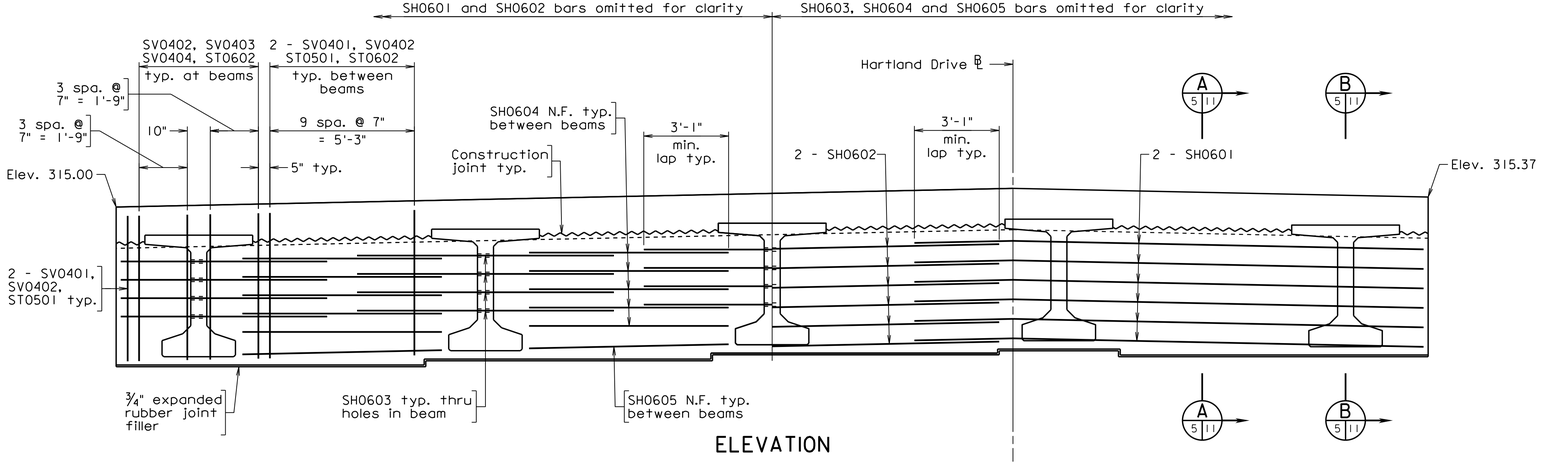

ELEVATION

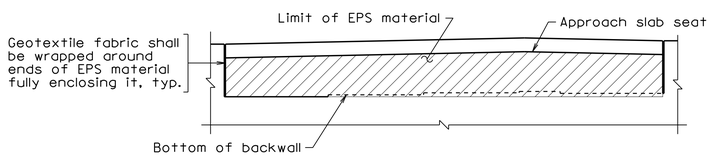

VIEW C-C
Not to scale

Scale: ⅜" = 1'-0" unless otherwise noted

PRELIMINARY PLANS

THESE PLANS NOT TO BE USED FOR CONSTRUCTION

Dewberry

Dewberry Engineers Inc.
8401 ARLINGTON BLVD.
FAIRFAX, VA 22031
PHONE: 703.849.0100
FAX: 703.849.0518

HARTLAND DRIVE OVER BROAD RUN TRIBUTARY
LOUDOUN COUNTY
CPAP-2020-0009

SEAL

DEWBERRY ENGINEERS INC.
FAIRFAX, VA
STRUCTURAL ENGINEER

No.	DATE	BY	Description

REVISIONS

DESIGNED BY KLM
DRAWN BY JPD
CHECKED BY EJA
DATE APRIL 2020

TITLE
ABUTMENT A SEMI-INTEGRAL BACKWALL PLAN AND ELEVATION

PROJECT NO. 50113885

XXX-XX

SHEET NO. 5 of 49

Received by VMRC September 1, 2020 /blh

Notes:

All reinforcing bars in abutment footings shall be black steel.

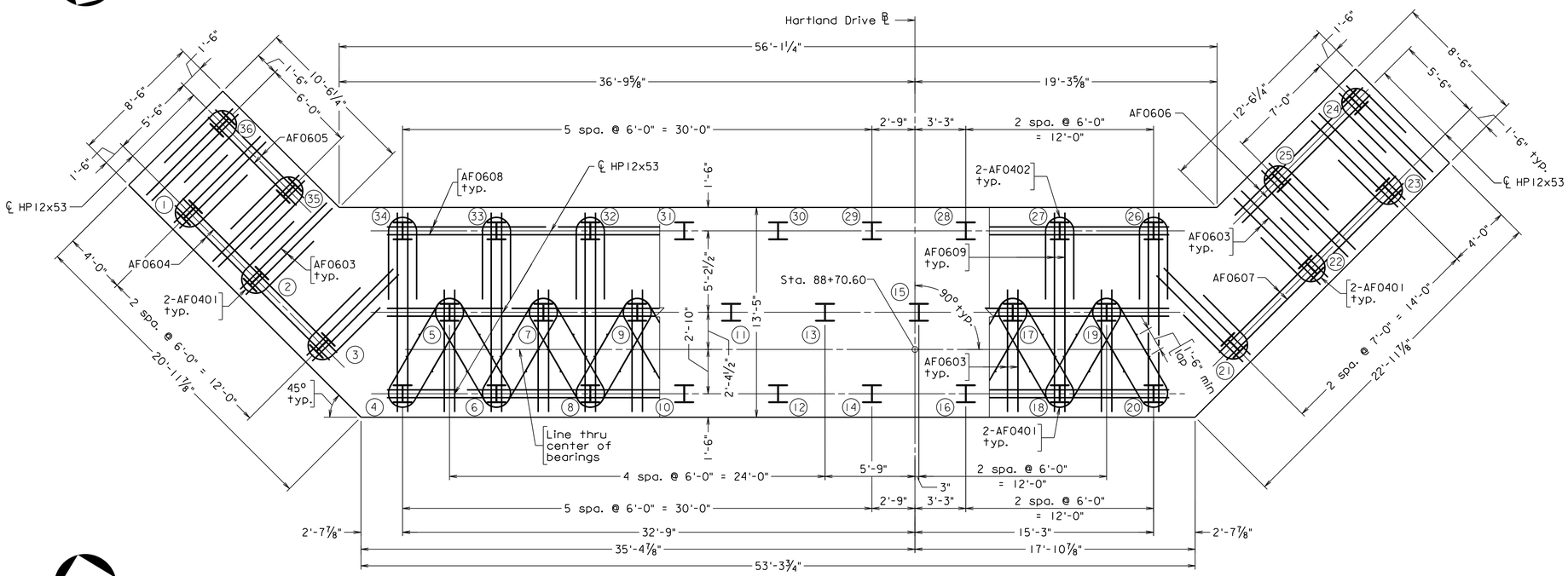

PILE LAYOUT AND PILE REINFORCEMENT PLAN

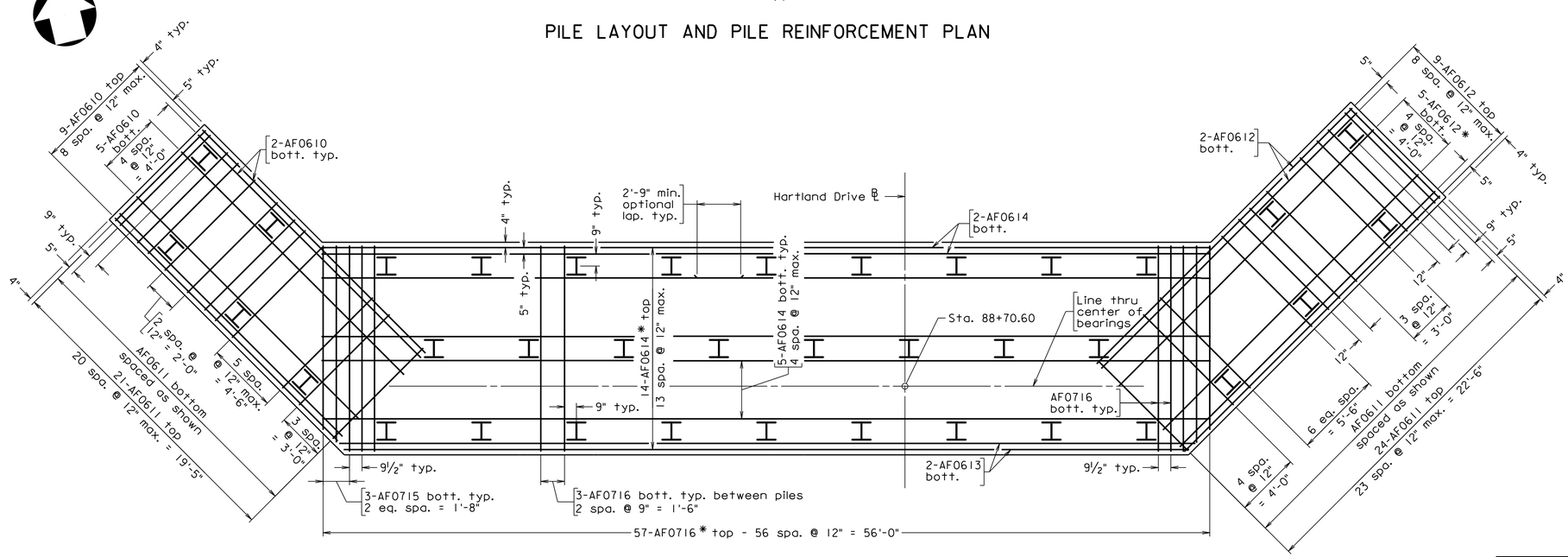

FOOTING REINFORCEMENT PLAN

* Cut in field as necessary.

Scale: ¼" = 1'-0"

PRELIMINARY PLANS

THESE PLANS NOT TO BE USED FOR CONSTRUCTION

Dewberry

Dewberry Engineers Inc.
8401 ARLINGTON BLVD.
FAIRFAX, VA 22031
PHONE: 703.849.0100
FAX: 703.849.0518

HARTLAND DRIVE OVER BROAD RUN TRIBUTARY

LOUDOUN COUNTY

CPAP-2020-0009

SEAL

DEWBERRY ENGINEERS INC.
FAIRFAX, VA
STRUCTURAL ENGINEER

No.	DATE	BY	Description

REVISIONS

DESIGNED BY	TPV
DRAWN BY	TPV
CHECKED BY	PCA
DATE	APRIL 2020

TITLE

ABUTMENT A FOOTING PLAN

PROJECT NO. 50113885

XXX-XX

SHEET NO. 6 of 49

Received by VMRC September 1, 2020 /blh

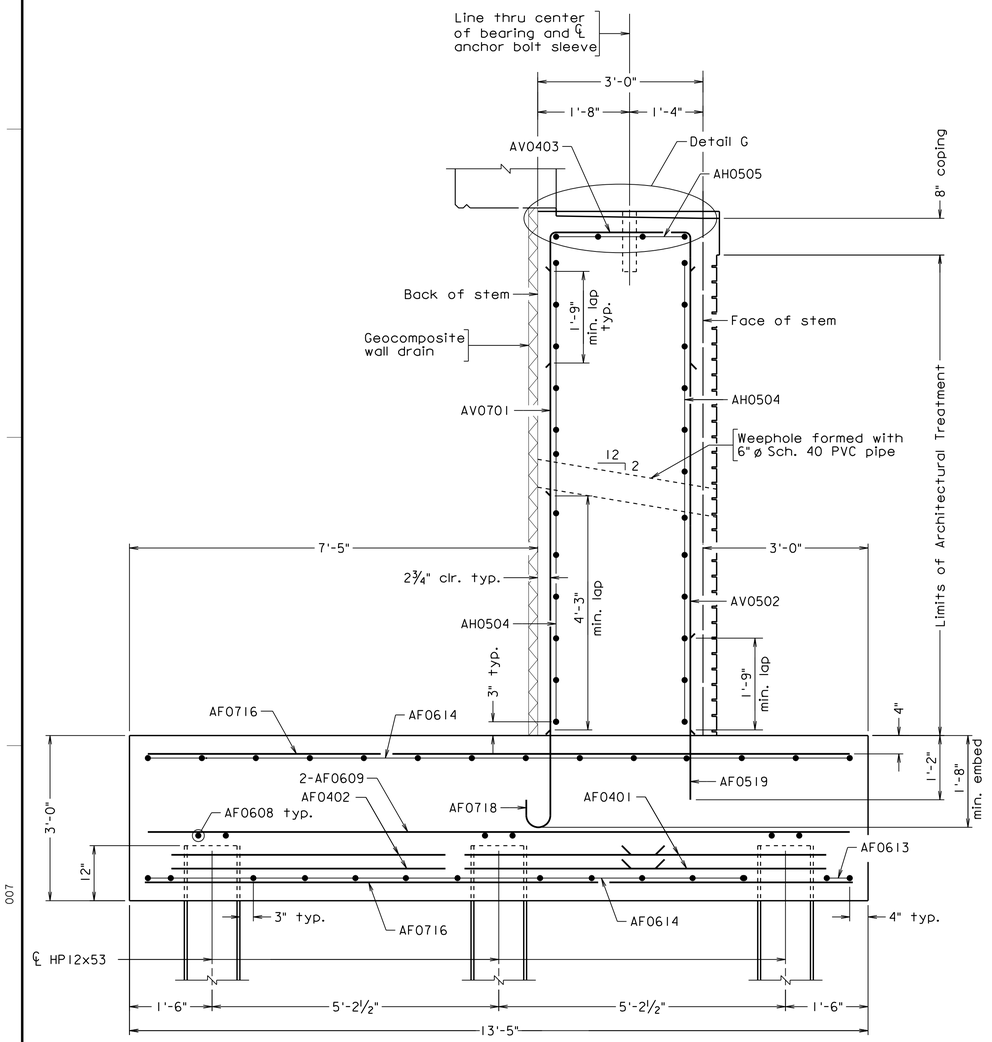

SECTION A (4 | 7)

Pre-bored holes for piles not shown.
See sheet 8 for details

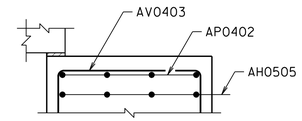

SECTION B (4 | 7)

Scale: 1½" = 1'-0"

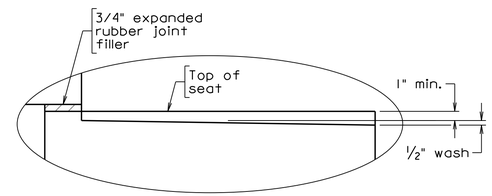

DETAIL G

Scale: 1½" = 1'-0"

Notes:

For details of semi-integral backwall, see sheets 5 and 11.

All reinforcing bars in the abutment footing and neatwork shall be black steel.

For anchor bolt sleeve details, see bearing details on sheet 20.

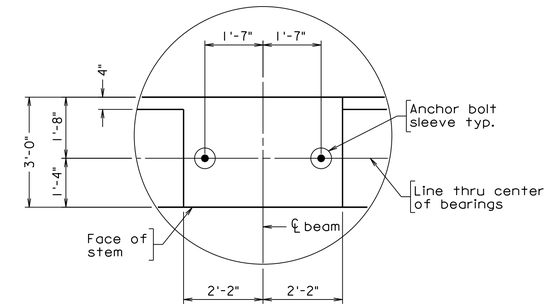

DETAIL H AND TYP. ANCHOR BOLT LAYOUT

Scale: ½" = 1'-0"

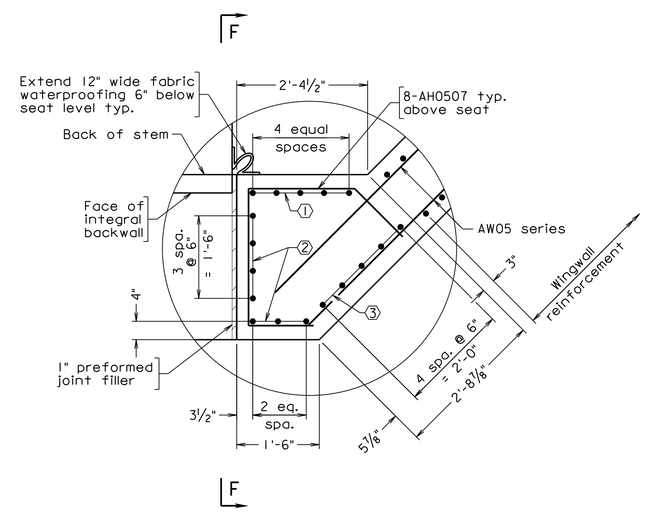

DETAIL E

① AV0704 @ East Wingwall
AV0713 @ West Wingwall

② AV0505 @ East Wingwall
AV0514 @ West Wingwall

③ AV0506 @ West Wingwall
AV0515 @ East Wingwall

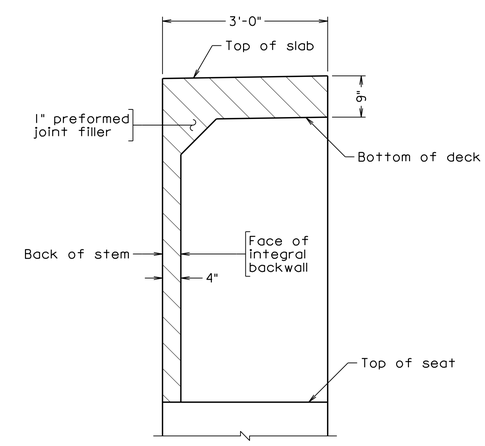

SECTION F-F

PRELIMINARY PLANS

THESE PLANS NOT TO BE USED FOR CONSTRUCTION

Scale: ¾" = 1'-0" unless otherwise noted

Dewberry

Dewberry Engineers Inc.
8401 ARLINGTON BLVD.
FAIRFAX, VA 22031
PHONE: 703.849.0100
FAX: 703.849.0518

HARTLAND DRIVE OVER BROAD RUN TRIBUTARY
LOUDOUN COUNTY
CPAP-2020-0009

SEAL

DEWBERRY ENGINEERS INC.
FAIRFAX, VA
STRUCTURAL ENGINEER

No.	DATE	BY	Description

REVISIONS

DESIGNED BY TPV
DRAWN BY TPV
CHECKED BY PCA
DATE APRIL 2020

TITLE

ABUTMENT A SECTIONS AND DETAILS - 1

PROJECT NO. 50113885

XXX-XX

SHEET NO. 7 of 49

Received by VMRC September 1, 2020 /blh

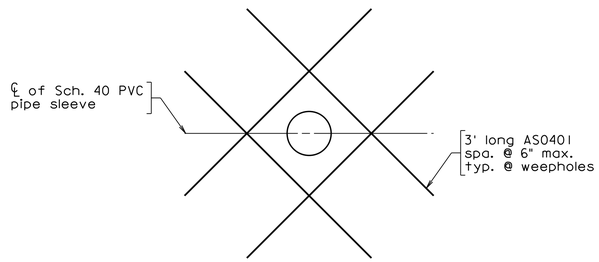

TYPICAL REINFORCEMENT AT WEEPHOLE

Not to scale

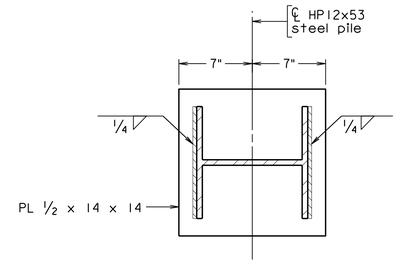

BASE PLATE DETAIL

Notes:

All reinforcing bars in the abutment footing and neatwork shall be black steel.

Material in the abutment select backfill zone shall be VDOT #2 or #3 stone and shall be compacted in accordance with Sections 303 and 305 of the VDOT Road and Bridge Specifications.

The final 1'-3" depth of the embankment side slopes shall be regular embankment material placed and finished as required.

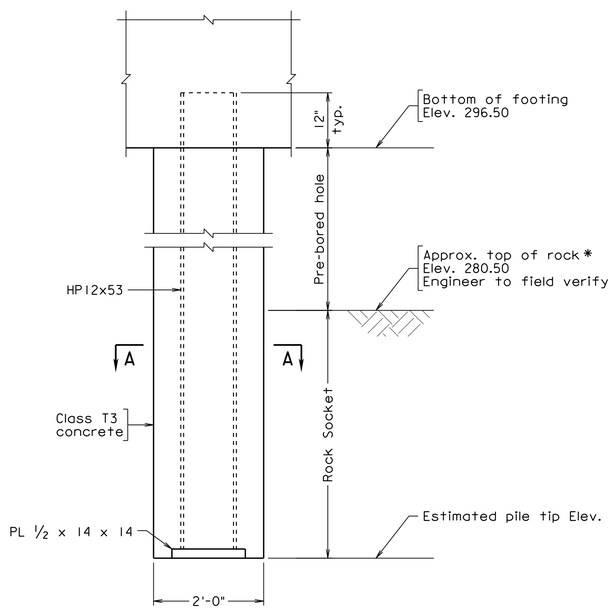

PRE-BORED PILE DETAIL

Not to scale

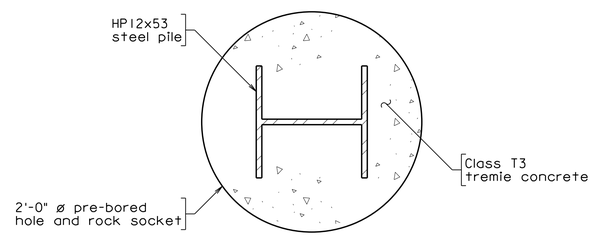

SECTION A-A

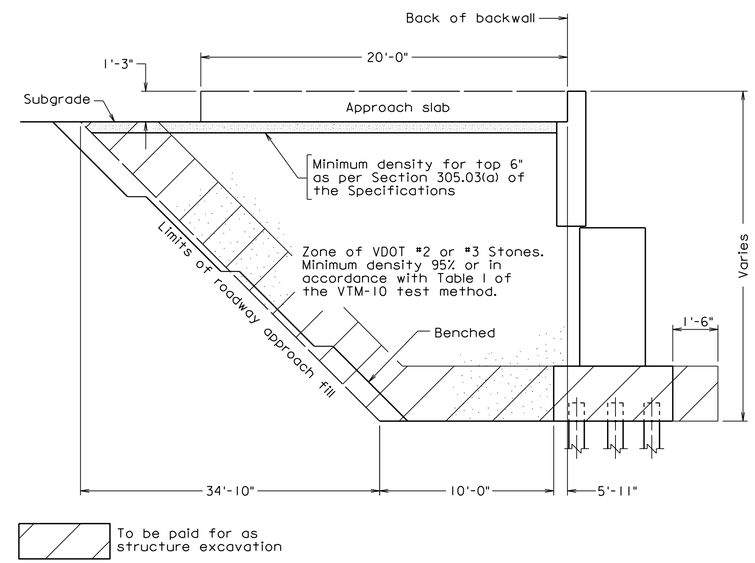

SECTION THROUGH ABUTMENT - FILL SECTION

Abutment drainage not shown

Not to scale

PILE DATA TABLE

Substructure Unit	Nominal Axial Resistance	Factored Axial Resistance	Estimated Rock Socket	Minimum Rock Socket	Estimated Tip Elevation	Minimum Tip Elevation
	Tons/pile	Tons/pile	ft-in	ft-in	ft	ft
Abutment A	243	128	3'-0"	2'-6"	277.50	277.50

The Strength Limit State controls the pile design.

*If top rock is encountered above the elevation specified in the Pre-Bored Pile Detail above contractor shall coordinate with EOR to ensure the pile design is still adequate.

Scale: 1 1/2" = 1'-0" unless otherwise noted

PRELIMINARY PLANS

THESE PLANS NOT TO BE USED FOR CONSTRUCTION

Dewberry

Dewberry Engineers Inc.
8401 ARLINGTON BLVD.
FAIRFAX, VA 22031
PHONE: 703.849.0100
FAX: 703.849.0518

HARTLAND DRIVE OVER BROAD RUN TRIBUTARY

LOUDOUN COUNTY

CPAP-2020-0009

SEAL

DEWBERRY ENGINEERS INC.
FAIRFAX, VA
STRUCTURAL ENGINEER

No.	DATE	BY	Description

REVISIONS

DESIGNED BY TPV

DRAWN BY TPV

CHECKED BY PCA

DATE APRIL 2020

TITLE

ABUTMENT A SECTIONS AND DETAILS - 2

PROJECT NO. 50113885

XXX-XX

SHEET NO. 8 of 49

Received by VMRC September 1, 2020 /blh

Notes:

For abutment details, see sheets 4 thru 8.

For footing reinforcement details, see sheet 6.

For weephole reinforcement detail, see sheet 8.

HR-1 railing shall be colored black.

All reinforcing bars in wingwall neatwork and footing shall be black steel.

E.F. denotes each face

N.F. denotes near face

F.F. denotes far face

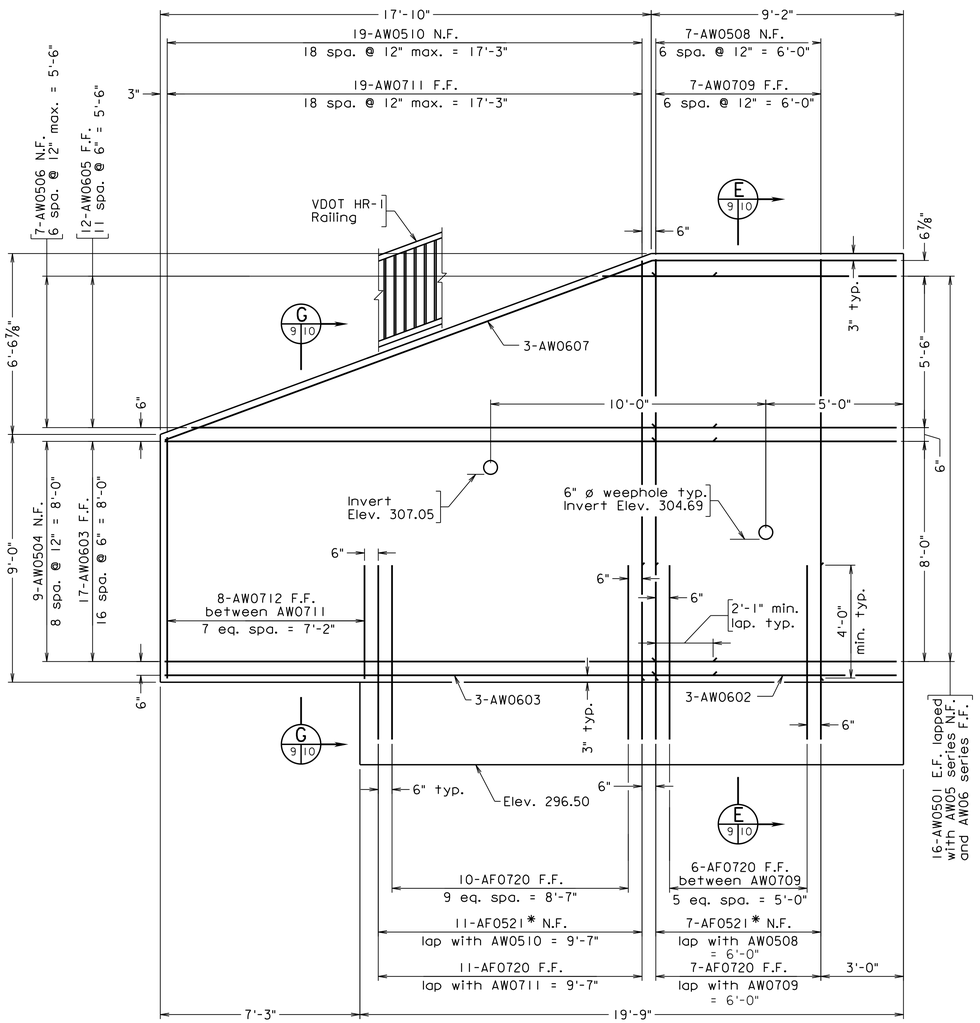

VIEW C

Piles not shown

*Minimum Lap = 1'-9"

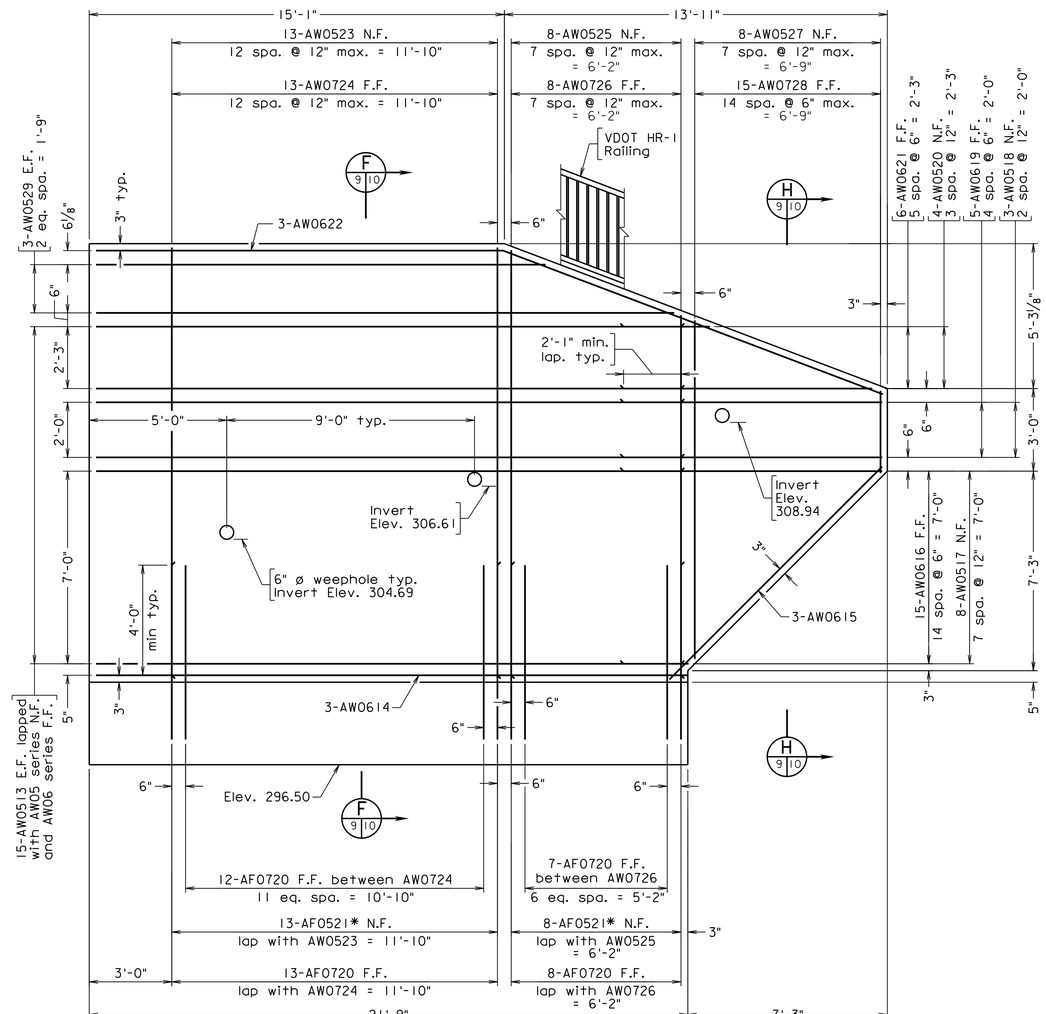

VIEW D

Piles not shown

*Minimum Lap = 1'-9"

PRELIMINARY PLANS

THESE PLANS NOT TO BE USED FOR CONSTRUCTION

Scale: 3/8" = 1'-0"

Dewberry

Dewberry Engineers Inc.
8401 ARLINGTON BLVD.
FAIRFAX, VA 22031
PHONE: 703.849.0100
FAX: 703.849.0518

HARTLAND DRIVE OVER BROAD RUN TRIBUTARY

LOUDOUN COUNTY

CPAP-2020-0009

SEAL

DEWBERRY ENGINEERS INC.
FAIRFAX, VA
STRUCTURAL ENGINEER

No.	DATE	BY	Description

REVISIONS

DESIGNED BY	TPV
DRAWN BY	TPV
CHECKED BY	PCA
DATE	APRIL 2020

TITLE

ABUTMENT A WINGWALL ELEVATIONS

PROJECT NO. 50113885

XXX-XX

Received by VMRC September 1, 2020 /blh

Notes:

For abutment details, see sheets 4 thru 8.

For footing reinforcement details, see sheet 6.

All reinforcing bars in wingwall neatwork and footing shall be black steel.

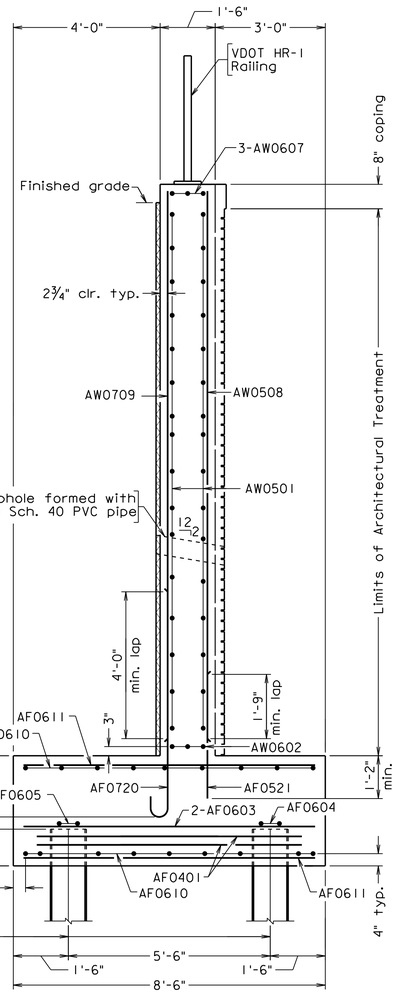

SECTION E 9 10

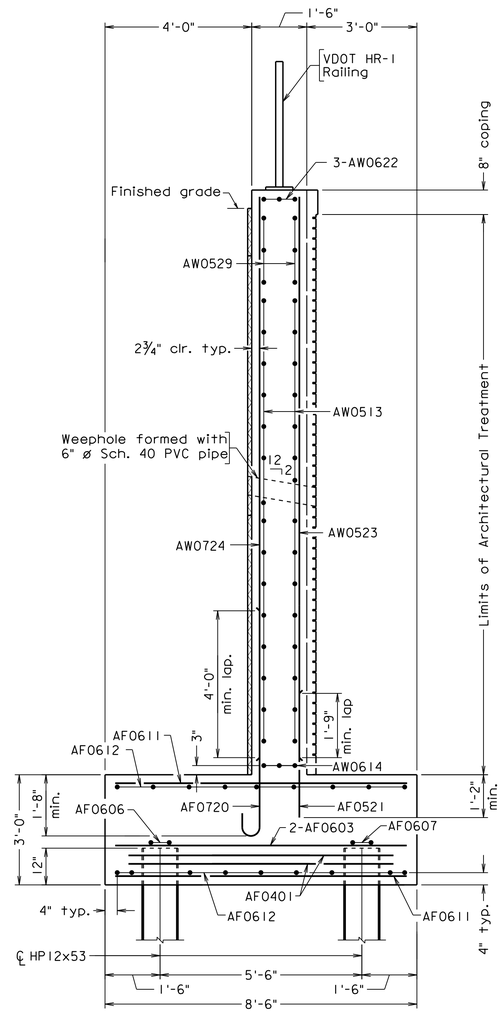

SECTION F 9 10

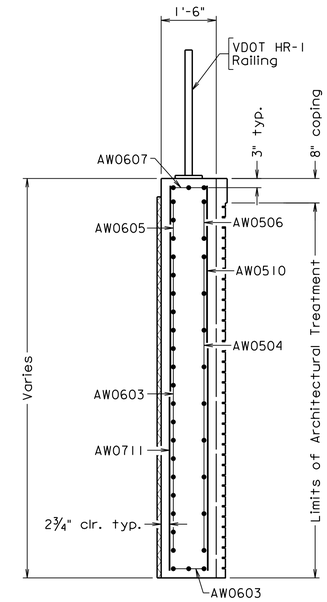

SECTION G 9 10

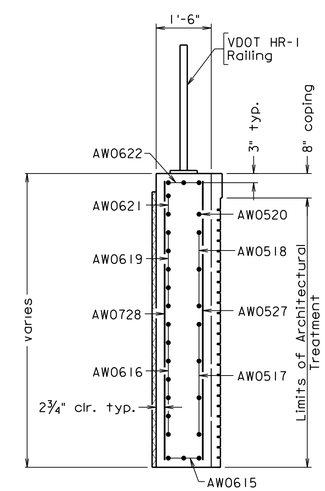

SECTION H 9 10

PRELIMINARY PLANS

THESE PLANS NOT TO BE USED FOR CONSTRUCTION

Scale: ½" = 1'-0"

Dewberry

Dewberry Engineers Inc.
8401 ARLINGTON BLVD.
FAIRFAX, VA 22031
PHONE: 703.849.0100
FAX: 703.849.0518

HARTLAND DRIVE OVER BROAD RUN TRIBUTARY

LOUDOUN COUNTY

CPAP-2020-0009

SEAL

DEWBERRY ENGINEERS INC.
FAIRFAX, VA
STRUCTURAL ENGINEER

No.	DATE	BY	Description

REVISIONS

DESIGNED BY	TPV
DRAWN BY	TPV
CHECKED BY	PCA
DATE	APRIL 2020

TITLE

ABUTMENT A WINGWALL SECTIONS

PROJECT NO. 50113885

XXX-XX

SHEET NO. 10 of 49

Received by VMRC September 1, 2020 /blh

Notes:

For integral backwall notes, see sheet 5.

For location of holes through end of beam and spacing of SH0603 bars, see sheet 25.

Geotextile fabric shall conform to the requirements of Section 245.03(c) of the Specifications. Cost shall be included in the price for elastic inclusion pay item.

The contractor shall install temporary blocking devices acceptable to the Engineer to prevent the superstructure from sliding during construction. Such devices are required at the lower end of each girder and shall be removed after construction is completed. The cost of the devices shall be included in cost of prestressed beams.

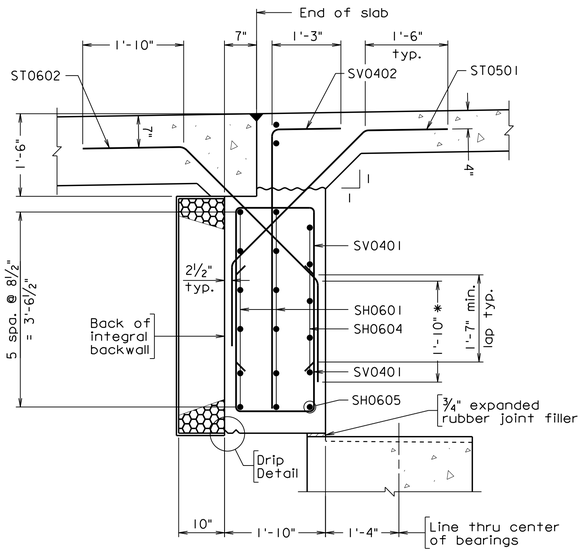

SECTION A 5 11
Between beams

* Cut in the field as needed to clear bottom flange of prestressed concrete beam

For details not shown, see Section B

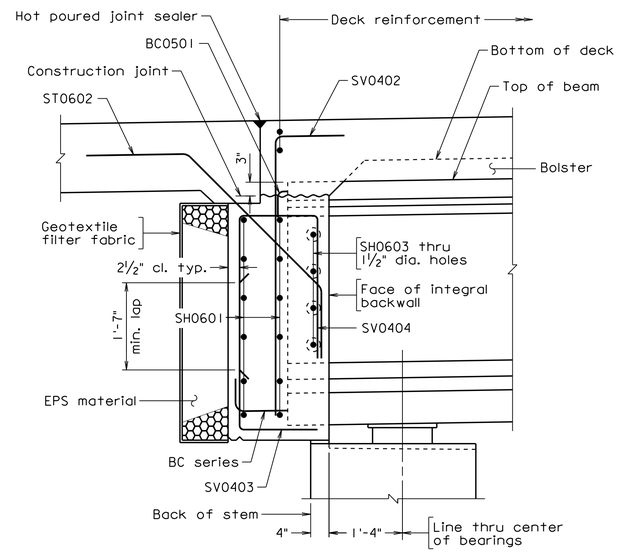

SECTION B 5 11
At beams

For details not shown, see Section A

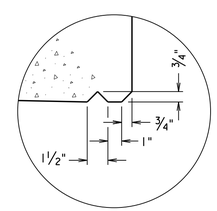

DRIP DETAIL
Not to scale

PRELIMINARY PLANS
THESE PLANS NOT TO BE USED FOR CONSTRUCTION

Scale: ¾" = 1'-0" unless otherwise noted

Dewberry

Dewberry Engineers Inc.
8401 ARLINGTON BLVD.
FAIRFAX, VA 22031
PHONE: 703.849.0100
FAX: 703.849.0518

HARTLAND DRIVE OVER BROAD RUN TRIBUTARY
LOUDOUN COUNTY
CPAP-2020-0009

SEAL

DEWBERRY ENGINEERS INC.
FAIRFAX, VA
STRUCTURAL ENGINEER

No.	DATE	BY	Description

REVISIONS

DESIGNED BY KLM
DRAWN BY JPD
CHECKED BY EJA
DATE APRIL 2020

TITLE
ABUTMENT A SEMI-INTEGRAL BACKWALL SECTIONS

PROJECT NO. 50113885

XXX-XX

SHEET NO. 11 of 49

Received by VMRC September 1, 2020 /blh

Notes:

For details of semi-integral backwall, see sheets 13 and 19.

For wingwall details, see sheets 17 and 18.

E.F. denotes each face

N.F. denotes near face

F.F. denotes far face

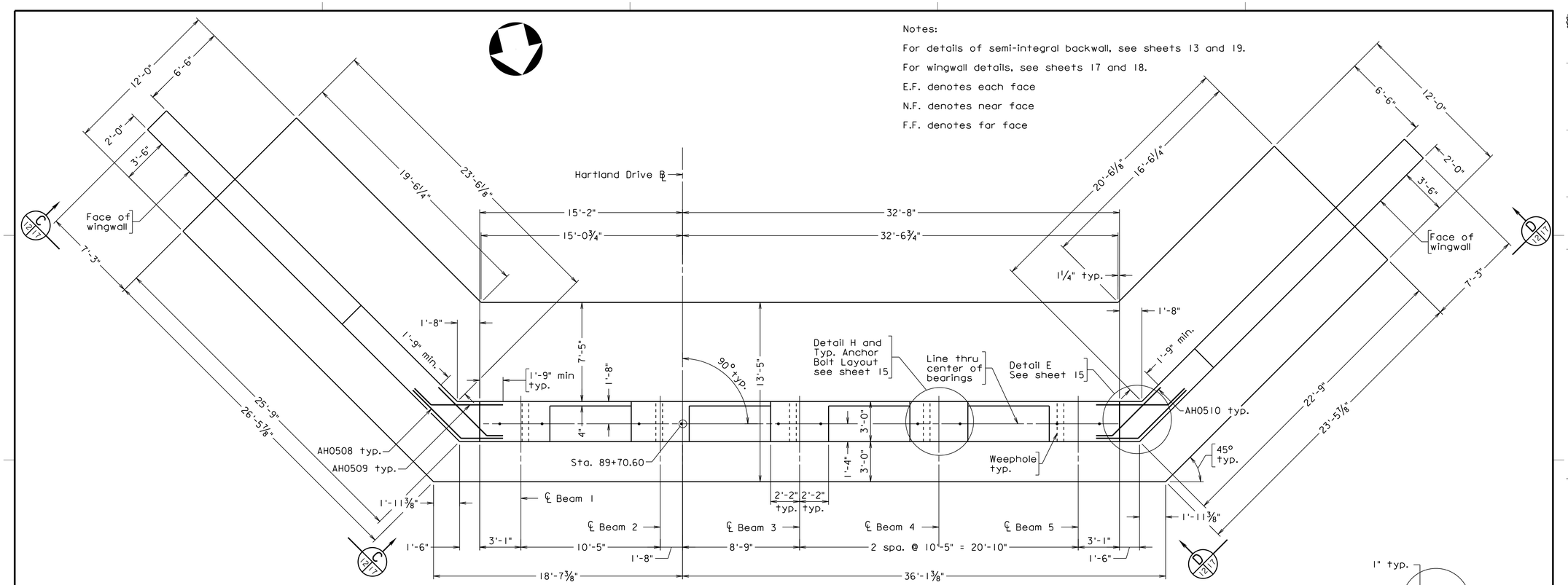

PLAN

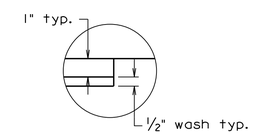

DETAIL I

Scale: 3" = 1'-0"

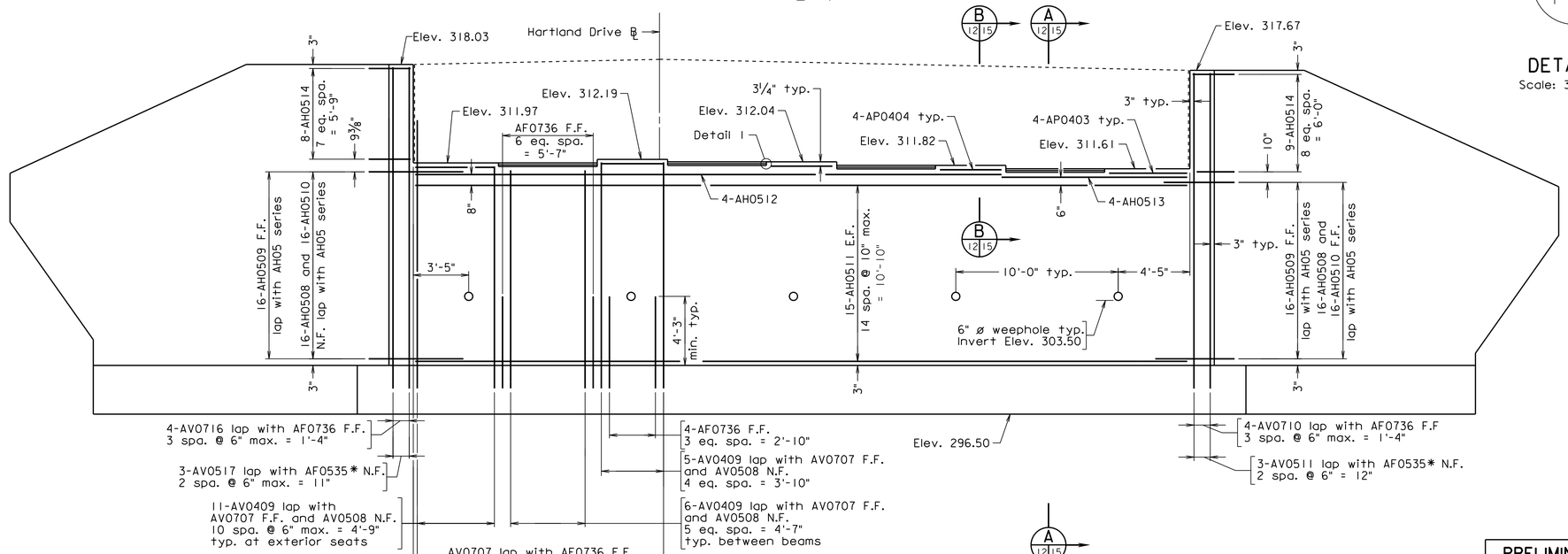

ELEVATION

Piles not shown

*Minimum Lap = 1'-9"

Scale: ¼" = 1'-0" unless otherwise noted

PRELIMINARY PLANS

THESE PLANS NOT TO BE USED FOR CONSTRUCTION

Dewberry

Dewberry Engineers Inc.
8401 ARLINGTON BLVD.
FAIRFAX, VA 22031
PHONE: 703.849.0100
FAX: 703.849.0518

HARTLAND DRIVE OVER BROAD RUN TRIBUTARY

LOUDOUN COUNTY

CPAP-2020-0009

SEAL

DEWBERRY ENGINEERS INC.
FAIRFAX, VA
STRUCTURAL ENGINEER

No.	DATE	BY	Description

REVISIONS

DESIGNED BY	TPV
DRAWN BY	TPV
CHECKED BY	PCA
DATE	APRIL 2020

TITLE

ABUTMENT B PLAN AND ELEVATION

PROJECT NO. 50113885

XXX-XX

SHEET NO. 12 of 49

Received by VMRC September 1, 2020 /blh

Notes:

Integral backwall concrete shall be placed and cured to a minimum compressive strength of 3000 psi prior to placement of deck concrete.

Backfill operations above seat level shall not be started until deck has been placed and cured to a minimum compressive strength of 3000 psi. Backfill shall be placed such that the differential in fill height between both abutments does not exceed 6" after compaction.

For details of holes through the web and location and number of BC series bars, see sheet 25.

The integral backwalls shall be cast when the least thermal movement of the superstructure can be expected during the period of initial set of the concrete in the backwall, e.g. at dusk or during an expected uniformly cloudy day.

Forms for the backwall shall be attached to the beams only; the forms shall not be attached to or blocked against the abutment stem. The backwall and forms must be free to move in relation to the abutment.

All reinforcement in the abutment backwall shall be Corrosion Resistant Reinforcing Steel, Class I.

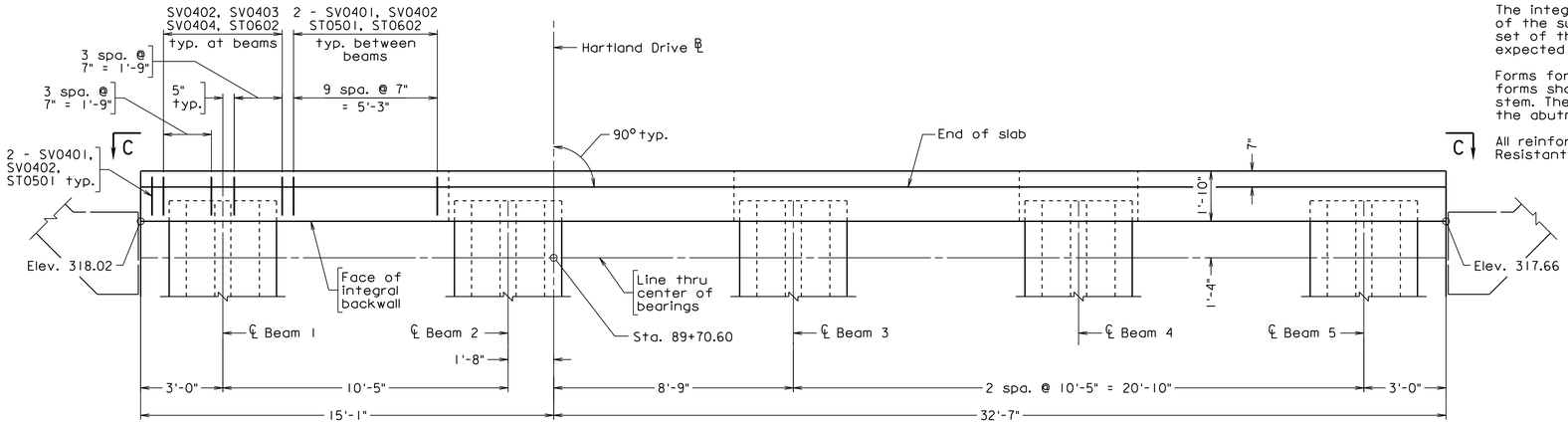

PLAN

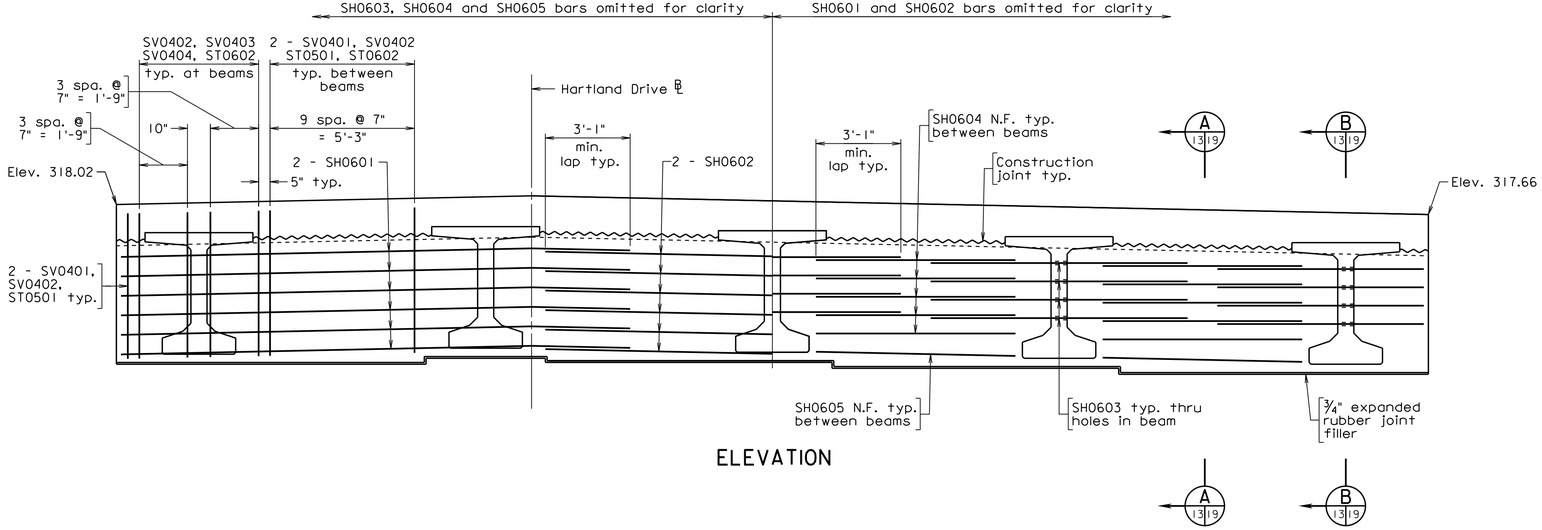

ELEVATION

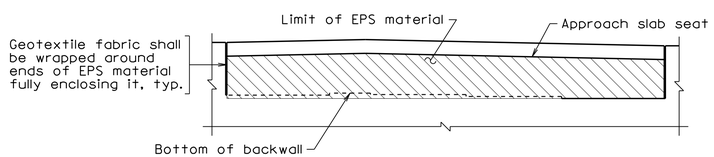

VIEW C-C
Not to scale

Scale: ⅜" = 1'-0" unless otherwise noted

PRELIMINARY PLANS
THESE PLANS NOT TO BE USED FOR CONSTRUCTION

Dewberry

Dewberry Engineers Inc.
8401 ARLINGTON BLVD.
FAIRFAX, VA 22031
PHONE: 703.849.0100
FAX: 703.849.0518

HARTLAND DRIVE OVER BROAD RUN TRIBUTARY
LOUDOUN COUNTY
CPAP-2020-0009

SEAL

DEWBERRY ENGINEERS INC.
FAIRFAX, VA
STRUCTURAL ENGINEER

No.	DATE	BY	Description

REVISIONS

DESIGNED BY KLM
DRAWN BY JPD
CHECKED BY EJA
DATE APRIL 2020

TITLE
ABUTMENT B SEMI-INTEGRAL BACKWALL PLAN AND ELEVATION

PROJECT NO. 50113885

XXX-XX

SHEET NO. 13 of 49

Received by VMRC September 1, 2020 /blh

Notes:

All reinforcing bars in abutment footings shall be black steel.

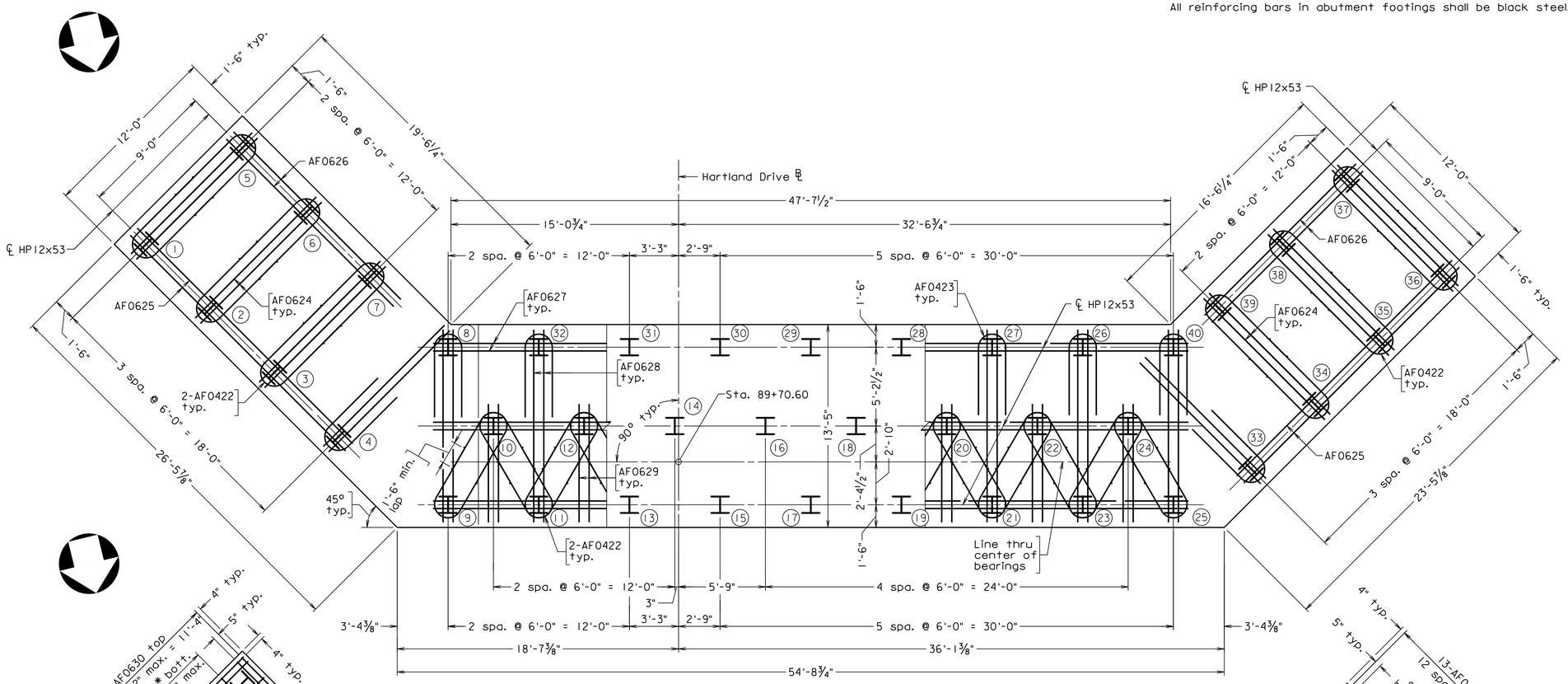

PILE LAYOUT AND PILE REINFORCEMENT PLAN

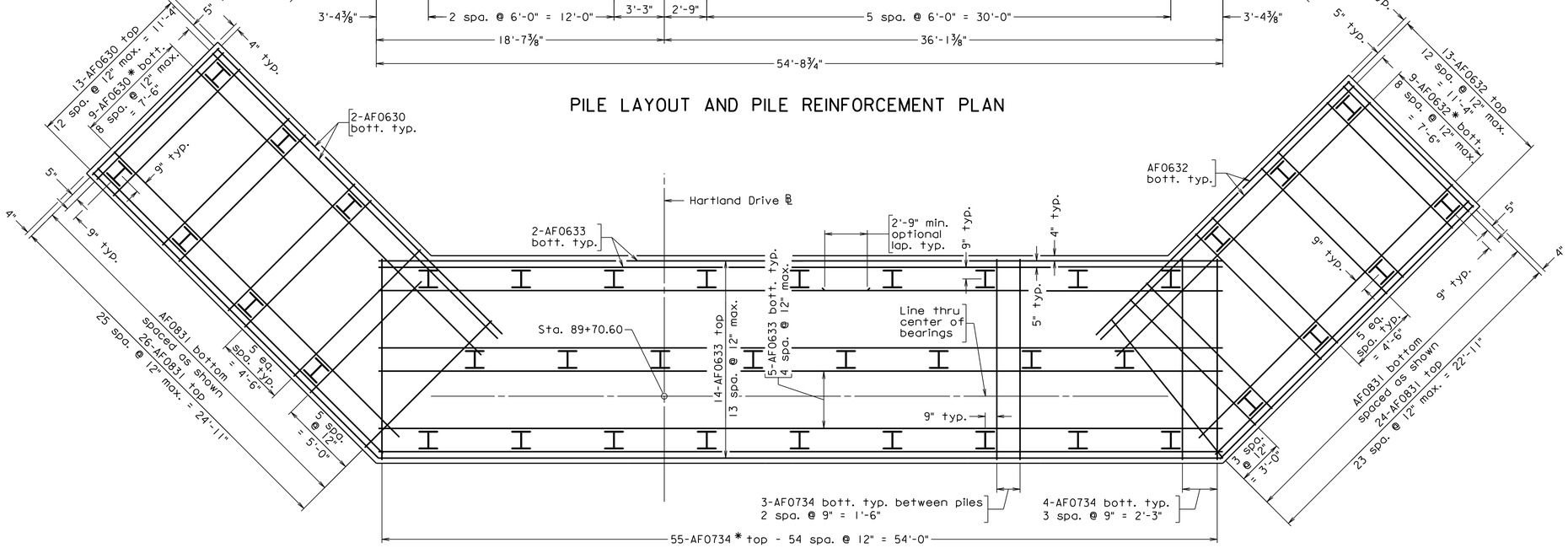

FOOTING REINFORCEMENT PLAN

* Cut in field as necessary.

Scale: ¼" = 1'-0"

PRELIMINARY PLANS

THESE PLANS NOT TO BE USED FOR CONSTRUCTION

Dewberry

Dewberry Engineers Inc.
8401 ARLINGTON BLVD.
FAIRFAX, VA 22031
PHONE: 703.849.0100
FAX: 703.849.0518

HARTLAND DRIVE OVER BROAD RUN TRIBUTARY

LOUDOUN COUNTY

CPAP-2020-0009

SEAL

DEWBERRY ENGINEERS INC.
FAIRFAX, VA
STRUCTURAL ENGINEER

No.	DATE	BY	Description

REVISIONS

DESIGNED BY	TPV
DRAWN BY	TPV
CHECKED BY	PCA
DATE	APRIL 2020

TITLE

ABUTMENT B FOOTING PLAN

PROJECT NO. 50113885

XXX-XX

SHEET NO. 14 of 49

014

Received by VMRC September 1, 2020 /blh

Notes:

For details of semi-integral backwall, see sheets 13 and 19.

All reinforcing bars in the abutment footing and neatwork shall be black steel.

For anchor bolt sleeve details, see bearing details on sheet 20.

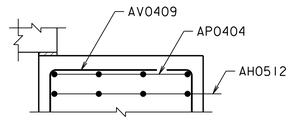

SECTION B (12|15)

Scale: 1½" = 1'-0"

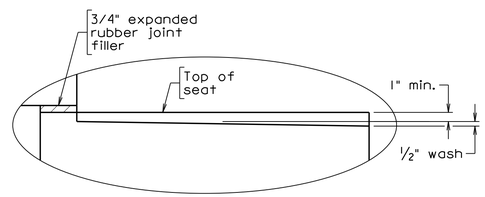

DETAIL G

Scale: 1½" = 1'-0"

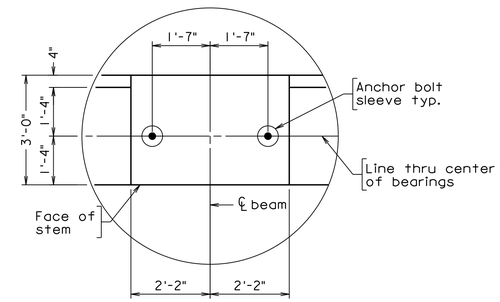

DETAIL H AND TYP. ANCHOR BOLT LAYOUT

Scale: ½" = 1'-0"

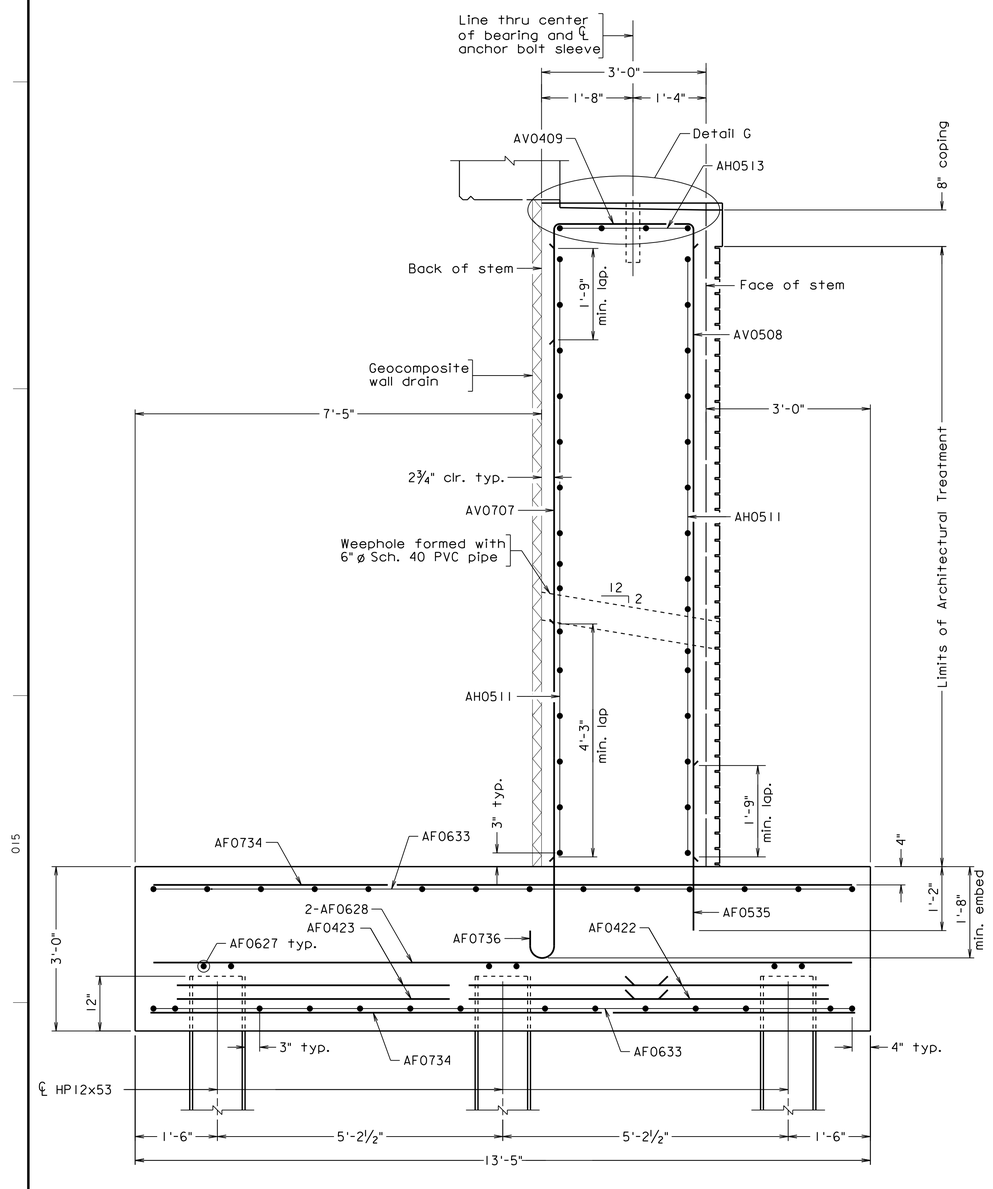

SECTION A (12|15)

Pre-bored holes for piles not shown.
See sheet 16 for details

Scale: ¾" = 1'-0" unless otherwise noted

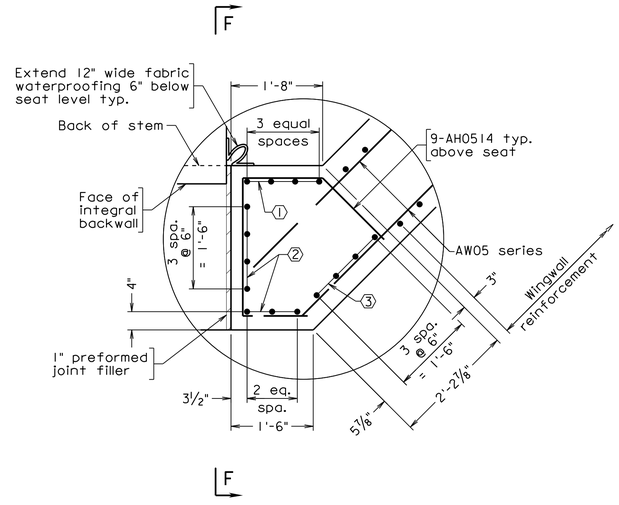

DETAIL E

① AV0710 @ West Wingwall
AV0716 @ East Wingwall

② AV0511 @ West Wingwall
AV0517 @ East Wingwall

③ AV0512 @ West Wingwall
AV0518 @ East Wingwall

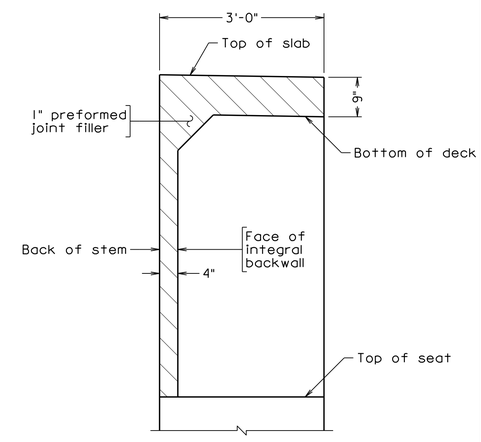

SECTION F-F

PRELIMINARY PLANS

THESE PLANS NOT TO BE USED FOR CONSTRUCTION

Dewberry

Dewberry Engineers Inc.
8401 ARLINGTON BLVD.
FAIRFAX, VA 22031
PHONE: 703.849.0100
FAX: 703.849.0518

HARTLAND DRIVE OVER BROAD RUN TRIBUTARY
LOUDOUN COUNTY
CPAP-2020-0009

SEAL

DEWBERRY ENGINEERS INC.
FAIRFAX, VA
STRUCTURAL ENGINEER

No.	DATE	BY	Description

REVISIONS

DESIGNED BY TPV
DRAWN BY TPV
CHECKED BY PCA
DATE APRIL 2020

TITLE

ABUTMENT B SECTIONS AND DETAILS - 1

PROJECT NO. 50113885

XXX-XX

SHEET NO. 15 of 49

Received by VMRC September 1, 2020 /blh

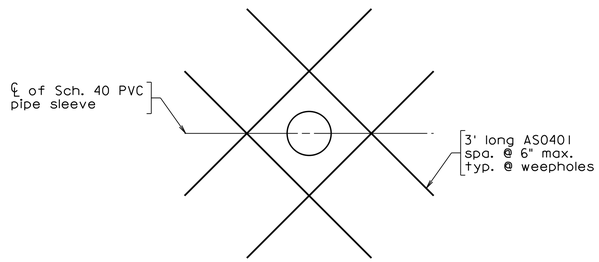

TYPICAL REINFORCEMENT AT WEEPHOLE

Not to scale

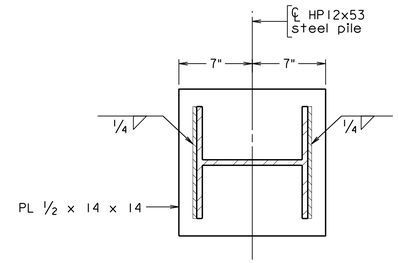

BASE PLATE DETAIL

Notes:

All reinforcing bars in the abutment footing and neatwork shall be black steel.

Material in the abutment select backfill zone shall be VDOT #2 or #3 stone and shall be compacted in accordance with Sections 303 and 305 of the VDOT Road and Bridge Specifications.

The final 1'-3" depth of the embankment side slopes shall be regular embankment material placed and finished as required.

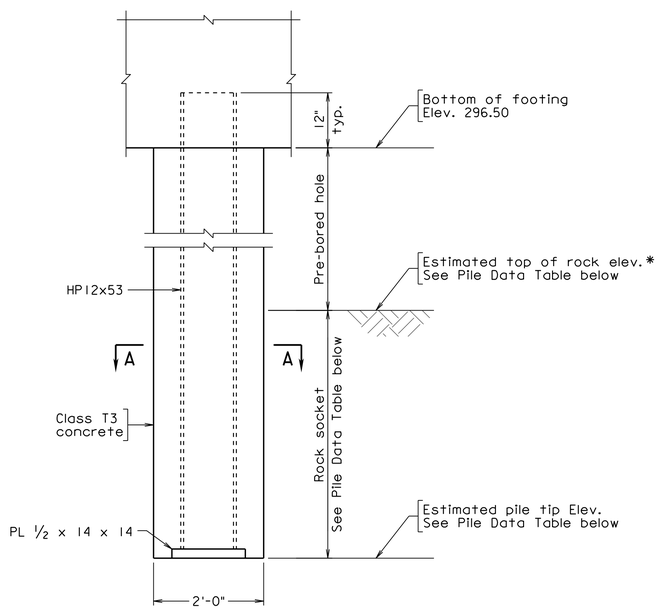

PRE-BORED PILE DETAIL

Not to scale

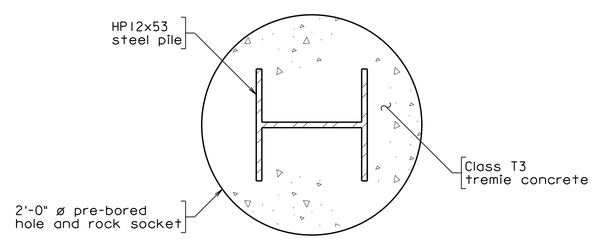

SECTION A-A

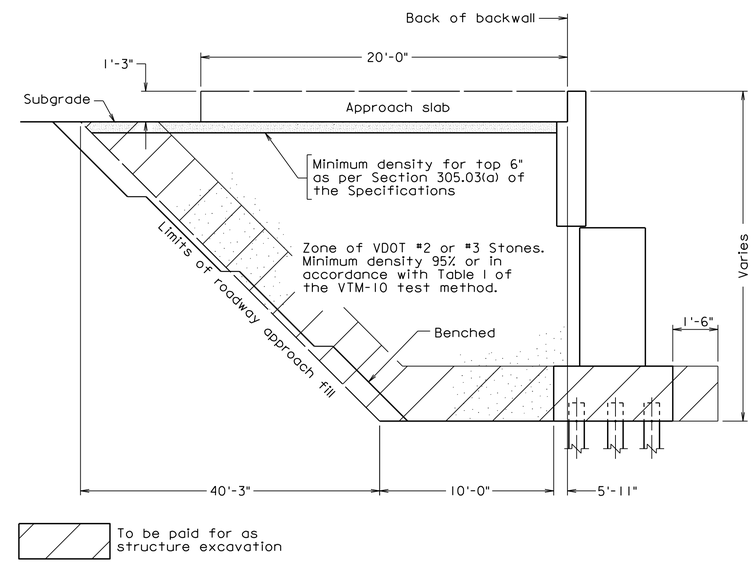

SECTION THROUGH ABUTMENT - FILL SECTION

Abutment drainage not shown

Not to scale

PILE DATA TABLE

Substructure Unit	Nominal Axial Resistance Tons/pile	Factored Axial Resistance Tons/pile	Estimated Rock Socket ft-in	Minimum Rock Socket ft-in	Estimated Top of Rock Elevation ft	Estimated Tip Elevation ft	Minimum Tip Elevation ft
Abutment B - Pile No. 1-8	196	105	5'-6"	2'-0"	292.00	286.50	286.50
Abutment B - Pile No. 9-20	252	132	2'-6"	2'-6"	264.00	261.50	261.50
Abutment B - Pile No. 21-32	242	128	3'-4"	2'-6"	285.30	282.00	282.00
Abutment B - Pile No. 33-40	196	105	2'-0"	2'-0"	276.00	274.00	274.00

The Strength Limit State controls the pile design.

*If top rock is encountered above the elevation specified in the Pre-Bored Pile Detail above contractor shall coordinate with EOR to ensure the pile design is still adequate.

Scale: 1 1/2" = 1'-0" unless otherwise noted

PRELIMINARY PLANS

THESE PLANS NOT TO BE USED FOR CONSTRUCTION

Dewberry

Dewberry Engineers Inc.
8401 ARLINGTON BLVD.
FAIRFAX, VA 22031
PHONE: 703.849.0100
FAX: 703.849.0518

HARTLAND DRIVE OVER BROAD RUN TRIBUTARY

LOUDOUN COUNTY

CPAP-2020-0009

SEAL

DEWBERRY ENGINEERS INC.
FAIRFAX, VA
STRUCTURAL ENGINEER

No.	DATE	BY	Description

REVISIONS

DESIGNED BY TPV

DRAWN BY TPV

CHECKED BY PCA

DATE APRIL 2020

TITLE

ABUTMENT B SECTIONS AND DETAILS - 2

PROJECT NO. 50113885

XXX-XX

SHEET NO. 16 of 49

Received by VMRC September 1, 2020 /blh

Notes:

For abutment details, see sheets 12 thru 16.

For footing reinforcement details, see sheet 14.

For weephole reinforcement detail, see sheet 16.

HR-1 railing shall be colored black.

All reinforcing bars in wingwall neatwork and footing shall be black steel.

E.F. denotes each face

N.F. denotes near face

F.F. denotes far face

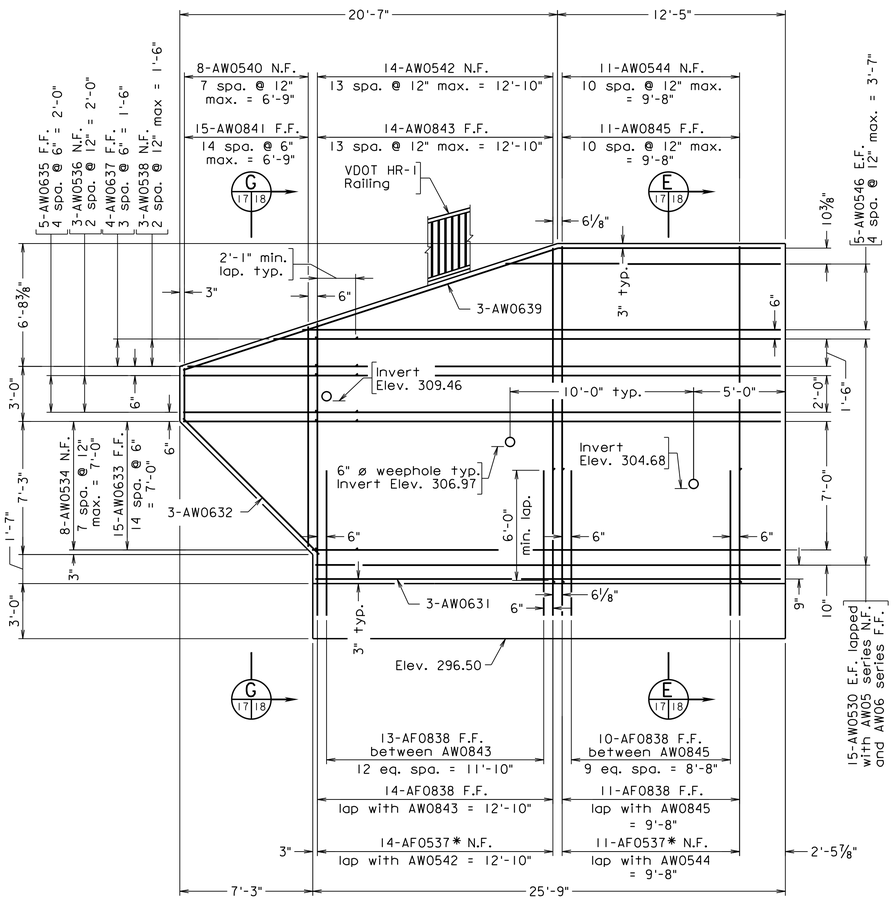

VIEW C (12|17)

Piles not shown

*Minimum Lap = 1'-9"

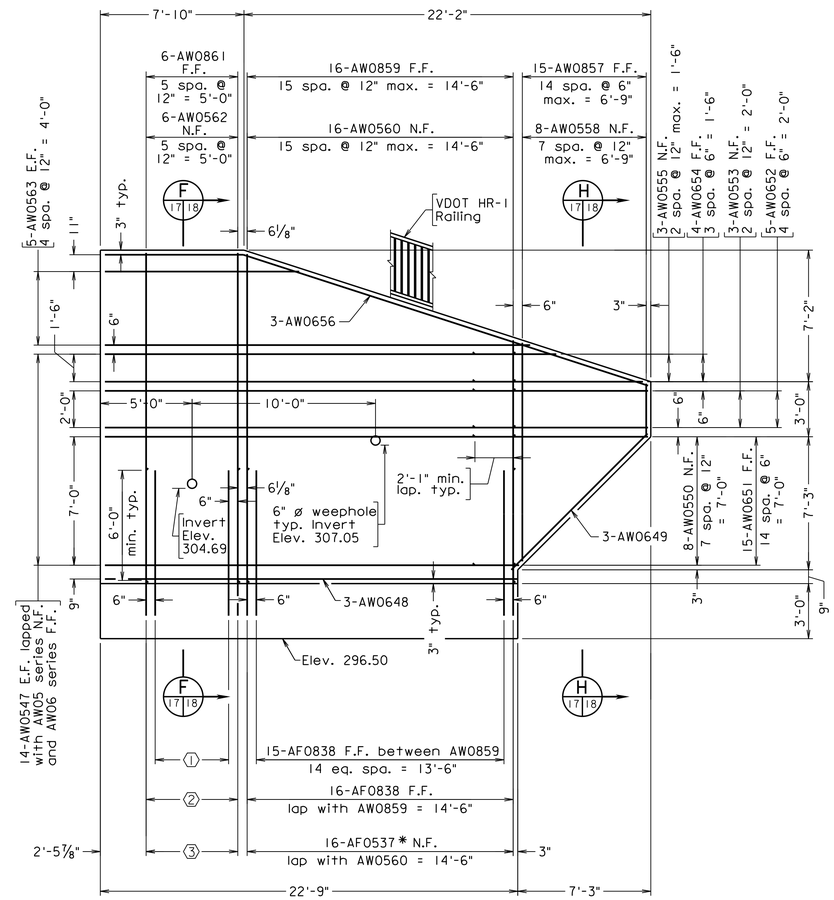

VIEW D (12|17)

Piles not shown

*Minimum Lap = 1'-9"

(1) 5-AF0838 F.F. between AW0861 4 eq. spa. = 4'-0"

(2) 6-AF0838 F.F. lap with AW0861 = 5'-0"

(3) 6-AF0537* N.F. lap with AW0562 = 5'-0"

Scale: ¼" = 1'-0"

PRELIMINARY PLANS

THESE PLANS NOT TO BE USED FOR CONSTRUCTION

Dewberry

Dewberry Engineers Inc.
8401 ARLINGTON BLVD.
FAIRFAX, VA 22031
PHONE: 703.849.0100
FAX: 703.849.0518

HARTLAND DRIVE OVER BROAD RUN TRIBUTARY

LOUDOUN COUNTY

CPAP-2020-0009

SEAL

DEWBERRY ENGINEERS INC.
FAIRFAX, VA
STRUCTURAL ENGINEER

No.	DATE	BY	Description

REVISIONS

DESIGNED BY	TPV
DRAWN BY	TPV
CHECKED BY	PCA
DATE	APRIL 2020

TITLE

ABUTMENT B WINGWALL ELEVATIONS

PROJECT NO. 50113885

XXX-XX

SHEET NO. 17 of 49

Received by VMRC September 1, 2020 /blh

Notes:

For abutment details, see sheets 12 thru 16.

For footing reinforcement details, see sheet 14.

All reinforcing bars in wingwall neatwork and footing shall be black steel.

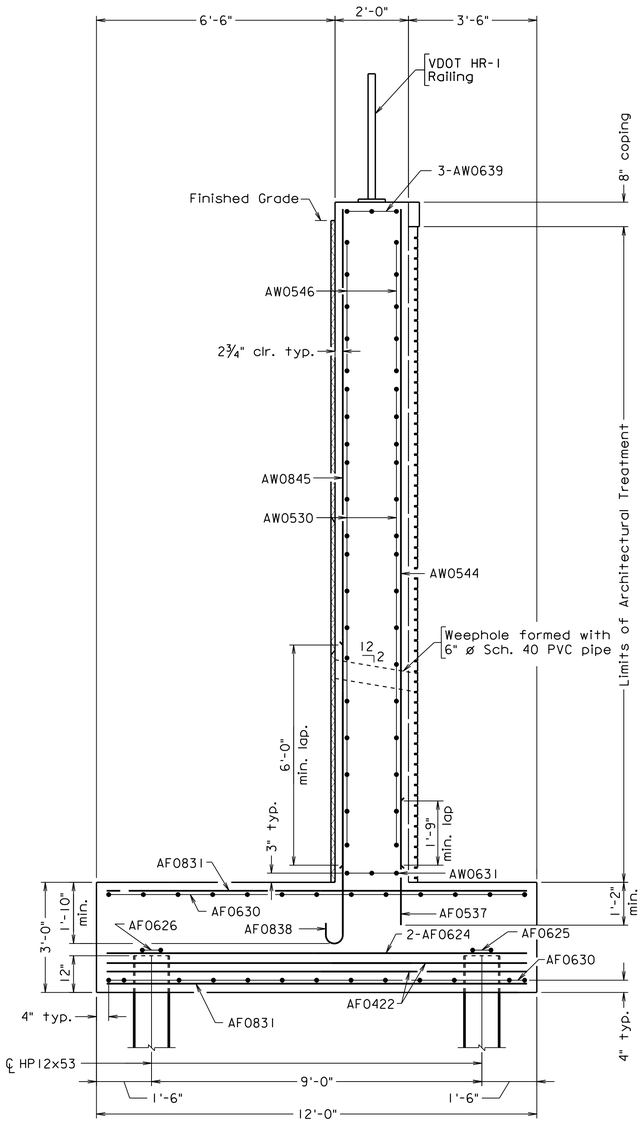

SECTION E 17 18

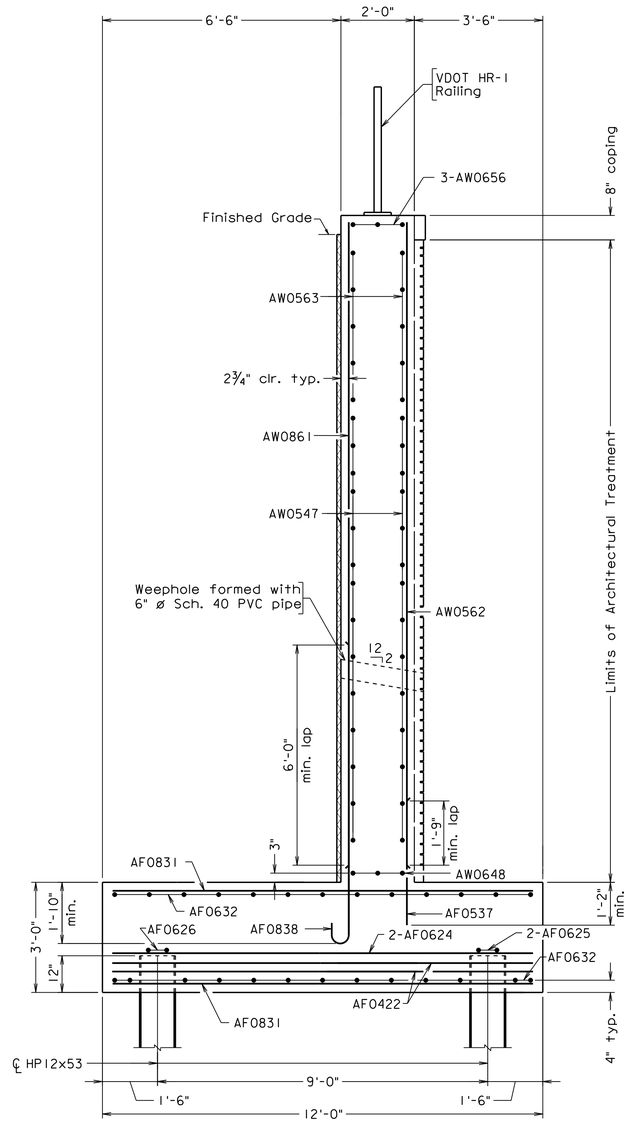

SECTION F 17 18

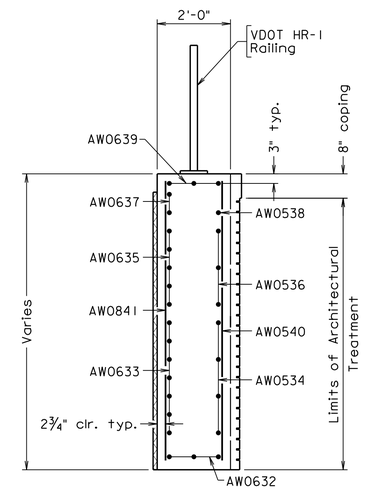

SECTION G 17 18

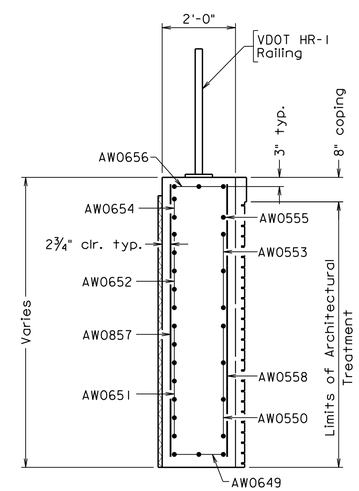

SECTION H 17 18

PRELIMINARY PLANS

THESE PLANS NOT TO BE USED FOR CONSTRUCTION

Scale: ½" = 1'-0"

Dewberry

Dewberry Engineers Inc.
8401 ARLINGTON BLVD.
FAIRFAX, VA 22031
PHONE: 703.849.0100
FAX: 703.849.0518

HARTLAND DRIVE OVER BROAD RUN TRIBUTARY

LOUDOUN COUNTY

CPAP-2020-0009

SEAL

DEWBERRY ENGINEERS INC.
FAIRFAX, VA
STRUCTURAL ENGINEER

No.	DATE	BY	Description

REVISIONS

DESIGNED BY	TPV
DRAWN BY	TPV
CHECKED BY	PCA
DATE	APRIL 2020

TITLE

ABUTMENT B WINGWALL SECTIONS

PROJECT NO. 50113885

XXX-XX

Received by VMRC September 1, 2020 /blh

Notes:

For integral backwall notes, see sheet 13.

For location of holes through end of beam and spacing of SH0603 bars, see sheet 25.

Geotextile fabric shall conform to the requirements of Section 245.03(c) of the Specifications. Cost shall be included in the price for elastic inclusion pay item.

The contractor shall install temporary blocking devices acceptable to the Engineer to prevent the superstructure from sliding during construction. Such devices are required at the lower end of each girder and shall be removed after construction is completed. The cost of the devices shall be included in cost of prestressed beams.

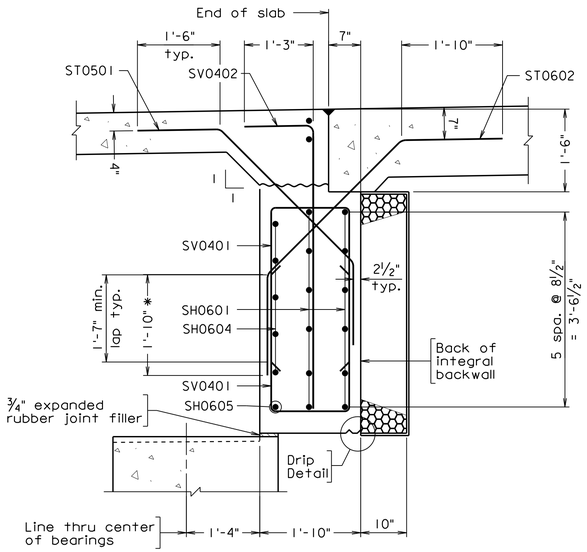

SECTION A (13|19)
Between beams

* Cut in the field as needed to clear bottom flange of prestressed concrete beam

For details not shown, see Section B

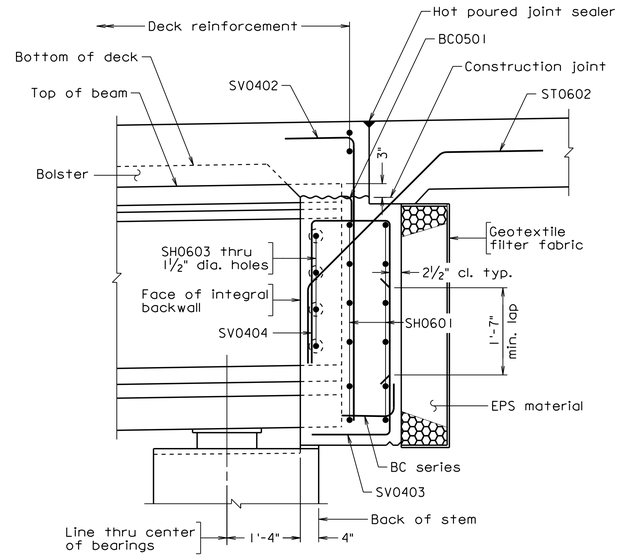

SECTION B (13|19)
At beams

For details not shown, see Section A

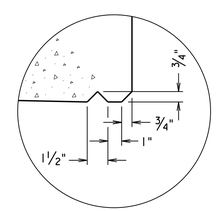

DRIP DETAIL
Not to scale

PRELIMINARY PLANS
THESE PLANS NOT TO BE USED FOR CONSTRUCTION

Scale: ¾" = 1'-0" unless otherwise noted

Dewberry

Dewberry Engineers Inc.
8401 ARLINGTON BLVD.
FAIRFAX, VA 22031
PHONE: 703.849.0100
FAX: 703.849.0518

HARTLAND DRIVE OVER BROAD RUN TRIBUTARY
LOUDOUN COUNTY
CPAP-2020-0009

SEAL

DEWBERRY ENGINEERS INC.
FAIRFAX, VA
STRUCTURAL ENGINEER

No.	DATE	BY	Description

REVISIONS

DESIGNED BY KLM
DRAWN BY JPD
CHECKED BY EJA
DATE APRIL 2020

TITLE
ABUTMENT B SEMI-INTEGRAL BACKWALL SECTIONS

PROJECT NO. 50113885

XXX-XX

SHEET NO. 19 of 49

Received by VMRC September 1, 2020 /blh

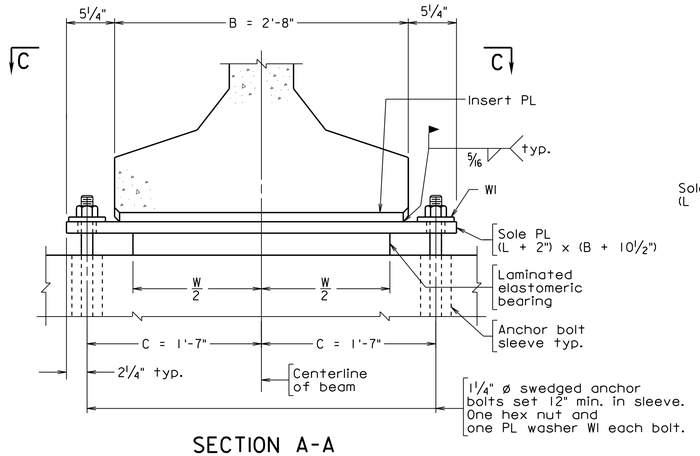

SECTION A-A

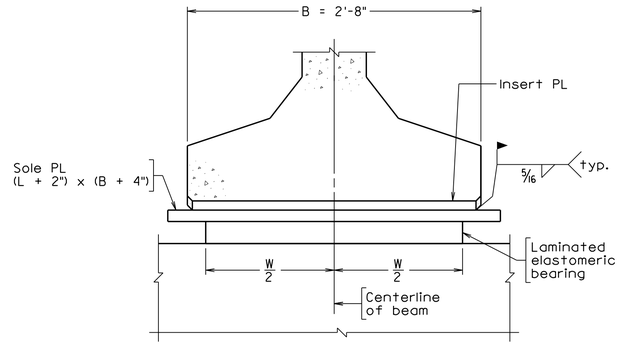

SECTION B-B

Notes:

Material: Elastomer - 50 durometer hardness
Shim - ASTM A36 or A1011 mild steel
Standard steel pipe - ASTM A53 Grade B
High strength anchor bolts - ASTM F1554, Grade 55

The Contractor may elect not to provide anchor bolt sleeves at any locations and cast the anchor bolts directly into concrete at their own risk and expense.

Elastomeric bearings shall be molded as a single unit.

Bevel sole plates to grade shown in table. Minimum ¾" thickness.

Insert plate shall provide uniform bearing over its entire contact area. For insert plate details, see sheet 24.

Sole plates, insert plates, anchor bolts, nuts and washers shall be galvanized.

* Centerline of beam (including center line and text) shall be marked on the top, bottom and side surfaces of the laminated elastomeric bearing prior to shipping. The markings shall be done with an indelible ink or flexible paint of contrasting color.

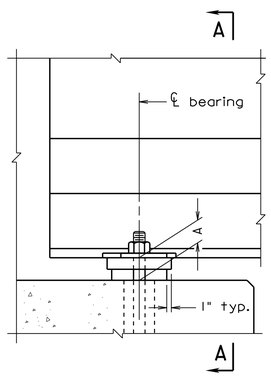

ABUTMENT ELEVATION

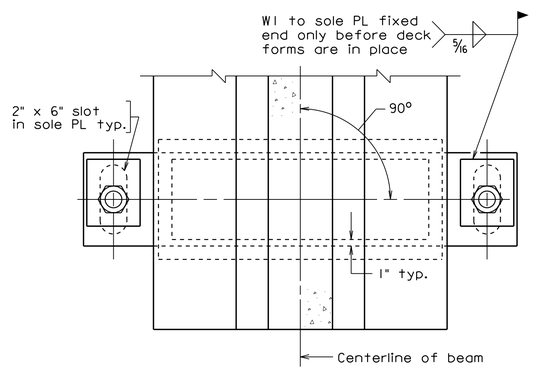

SECTION C-C

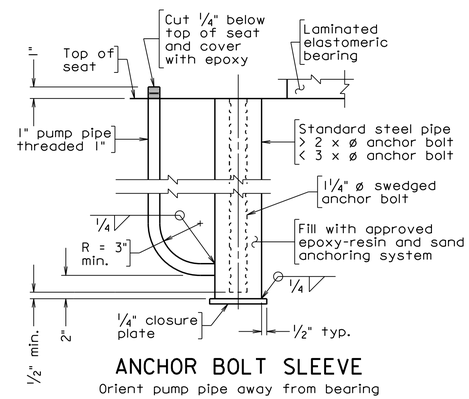

ANCHOR BOLT SLEEVE

Orient pump pipe away from bearing

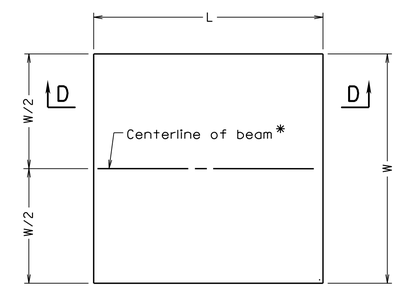

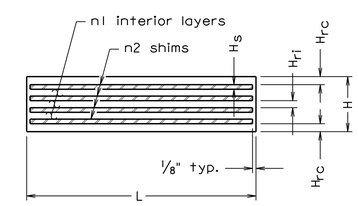

SECTION D-D

LAMINATED ELASTOMERIC BEARING

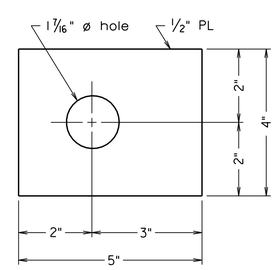

WASHER W1

Span	Abut.	Pier	Beam Type	Bearing Type	A	Laminated Elastomeric Bearing						Grade %	Total Load (kips)
						W	L	H	H_{rc}	n1 @ H_{ri}	n2 @ H_s		
All	All	-	PCBT	Exp.	5"	24"	13"	4"	¼"	5 @ 0.5565"	6 @ 0.1196"	2.59%	236.1

Not to scale

PRELIMINARY PLANS

THESE PLANS NOT TO BE USED FOR CONSTRUCTION

Dewberry

Dewberry Engineers Inc.
8401 ARLINGTON BLVD.
FAIRFAX, VA 22031
PHONE: 703.849.0100
FAX: 703.849.0518

HARTLAND DRIVE
OVER
BROAD RUN TRIBUTARY
LOUDOUN COUNTY
CPAP-2020-0009

SEAL

DEWBERRY ENGINEERS INC.
FAIRFAX, VA
STRUCTURAL ENGINEER

No.	DATE	BY	Description

REVISIONS

DESIGNED BY	MM
DRAWN BY	MM
CHECKED BY	KLM
DATE	APRIL 2020

TITLE

PRESTRESSED
BEAM
BEARING DETAILS

PROJECT NO. 50113885

XXX-XX

Received by VMRC September 1, 2020 /blh

Notes:

For additional reinforcing steel details, see Deck Slab Plan on sheet 28.

All reinforcing bars in the deck slab, median, and railings shall be Corrosion Resistant Reinforcing Steel, Class I.

For details of rail, see sheets 29 and 30.

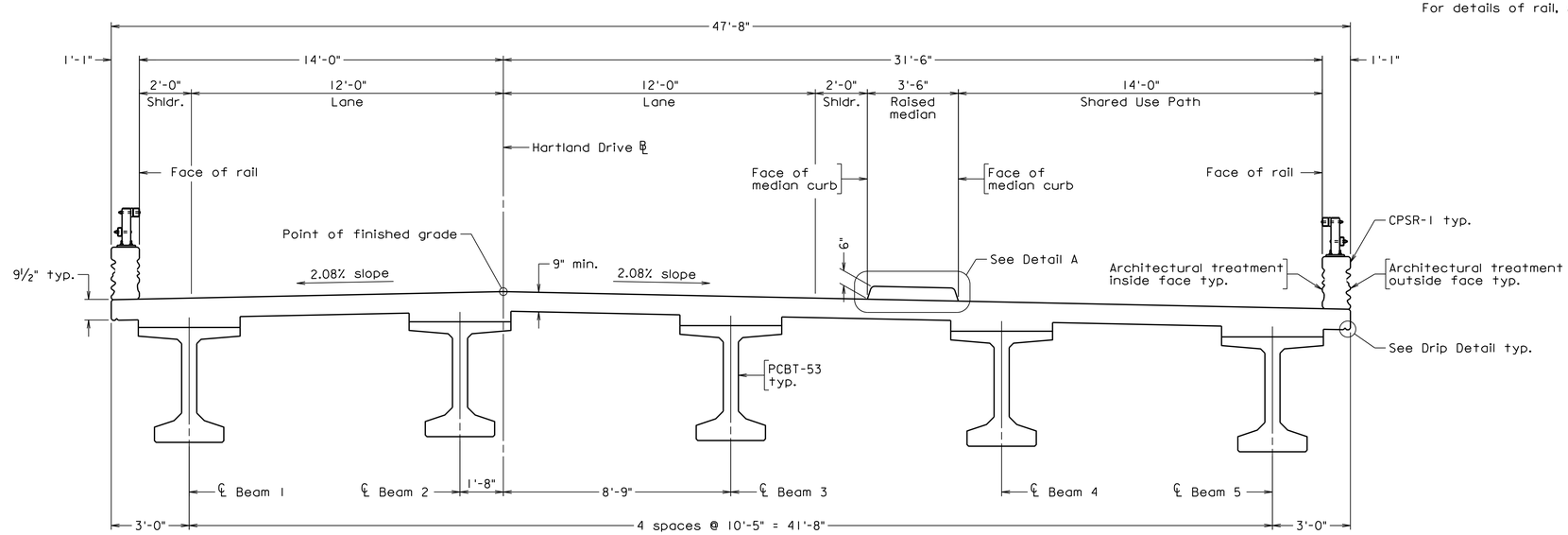

TRANSVERSE SECTION

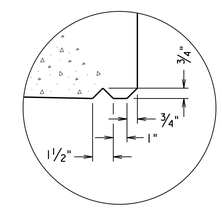

DRIP DETAIL
Not to scale

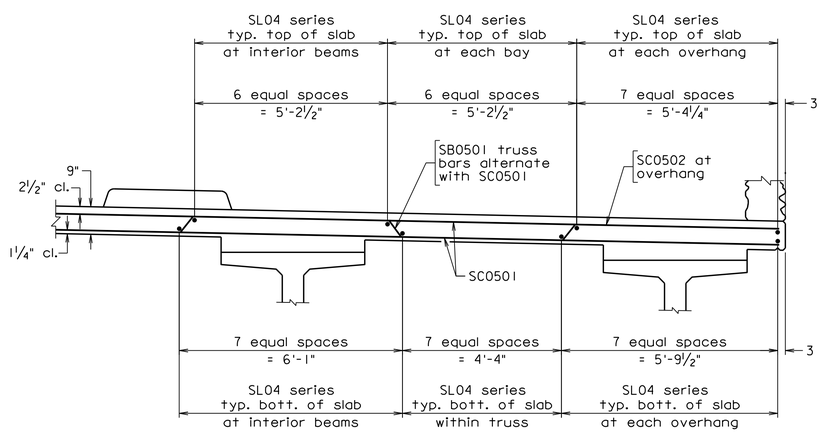

TYPICAL REINFORCEMENT DETAIL
Scale: ½" = 1'-0"

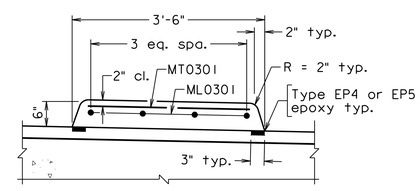

DETAIL A
Scale: ¾" = 1'-0"

Scale: ⅜" = 1'-0" unless otherwise noted

PRELIMINARY PLANS
THESE PLANS NOT TO BE USED FOR CONSTRUCTION

Dewberry

Dewberry Engineers Inc.
8401 ARLINGTON BLVD.
FAIRFAX, VA 22031
PHONE: 703.849.0100
FAX: 703.849.0518

HARTLAND DRIVE OVER BROAD RUN TRIBUTARY
LOUDOUN COUNTY
CPAP-2020-0009

SEAL

DEWBERRY ENGINEERS INC.
FAIRFAX, VA
STRUCTURAL ENGINEER

No.	DATE	BY	Description

REVISIONS

DESIGNED BY TPV
DRAWN BY JPD
CHECKED BY KLM
DATE APRIL 2020

TITLE

TRANSVERSE SECTION AND DETAILS

PROJECT NO. 50113885

XXX-XX

SHEET NO. 21 of 49

Received by VMRC September 1, 2020 /blh

Notes:

For prestressed concrete beam details, see sheets 23 thru 25.

For intermediate diaphragm details, see sheet 26.

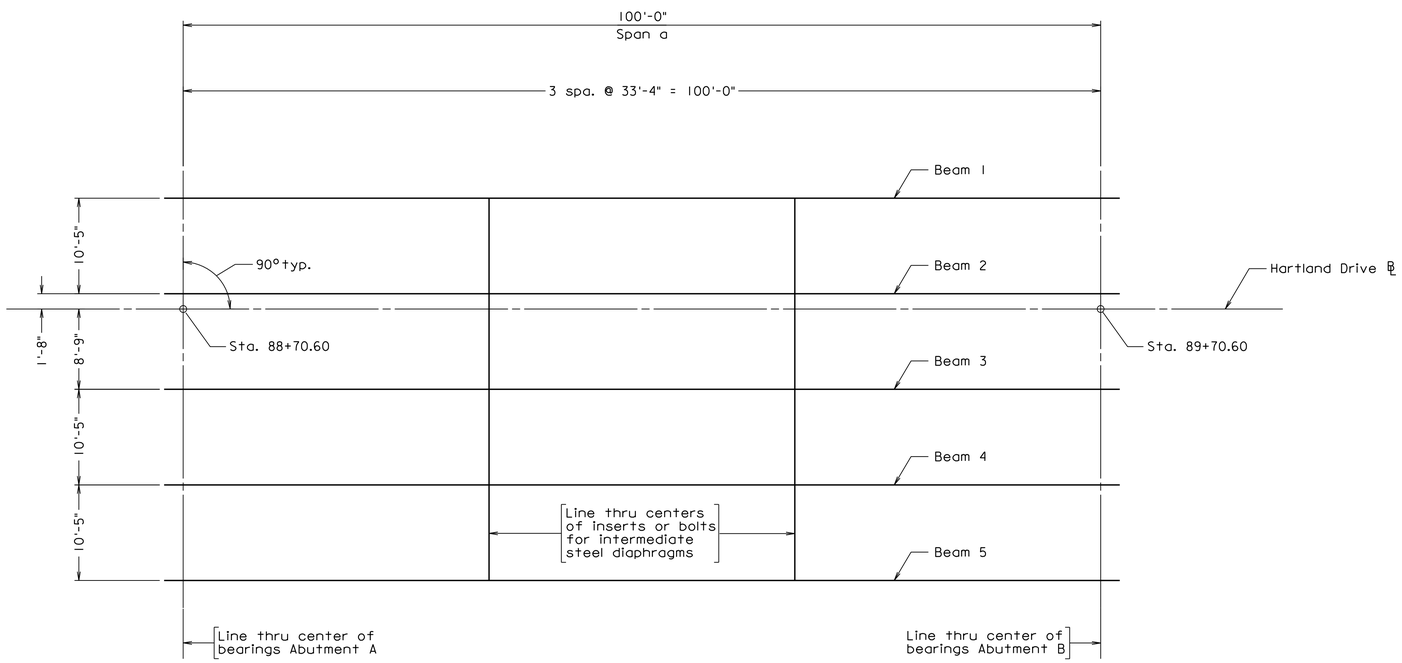

ERECTION DIAGRAM

PRELIMINARY PLANS

THESE PLANS NOT TO BE USED FOR CONSTRUCTION

Scale: 1/8" = 1'-0"

022

Dewberry

Dewberry Engineers Inc.
8401 ARLINGTON BLVD.
FAIRFAX, VA 22031
PHONE: 703.849.0100
FAX: 703.849.0518

HARTLAND DRIVE OVER BROAD RUN TRIBUTARY

LOUDOUN COUNTY

CPAP-2020-0009

SEAL

DEWBERRY ENGINEERS INC.
FAIRFAX, VA
STRUCTURAL ENGINEER

No.	DATE	BY	Description

REVISIONS

DESIGNED BY MM

DRAWN BY JPD

CHECKED BY KLM

DATE APRIL 2020

TITLE

ERECTION DIAGRAM

PROJECT NO. 50113885

XXX-XX

SHEET NO. 22 of 49

Received by VMRC September 1, 2020 /blh

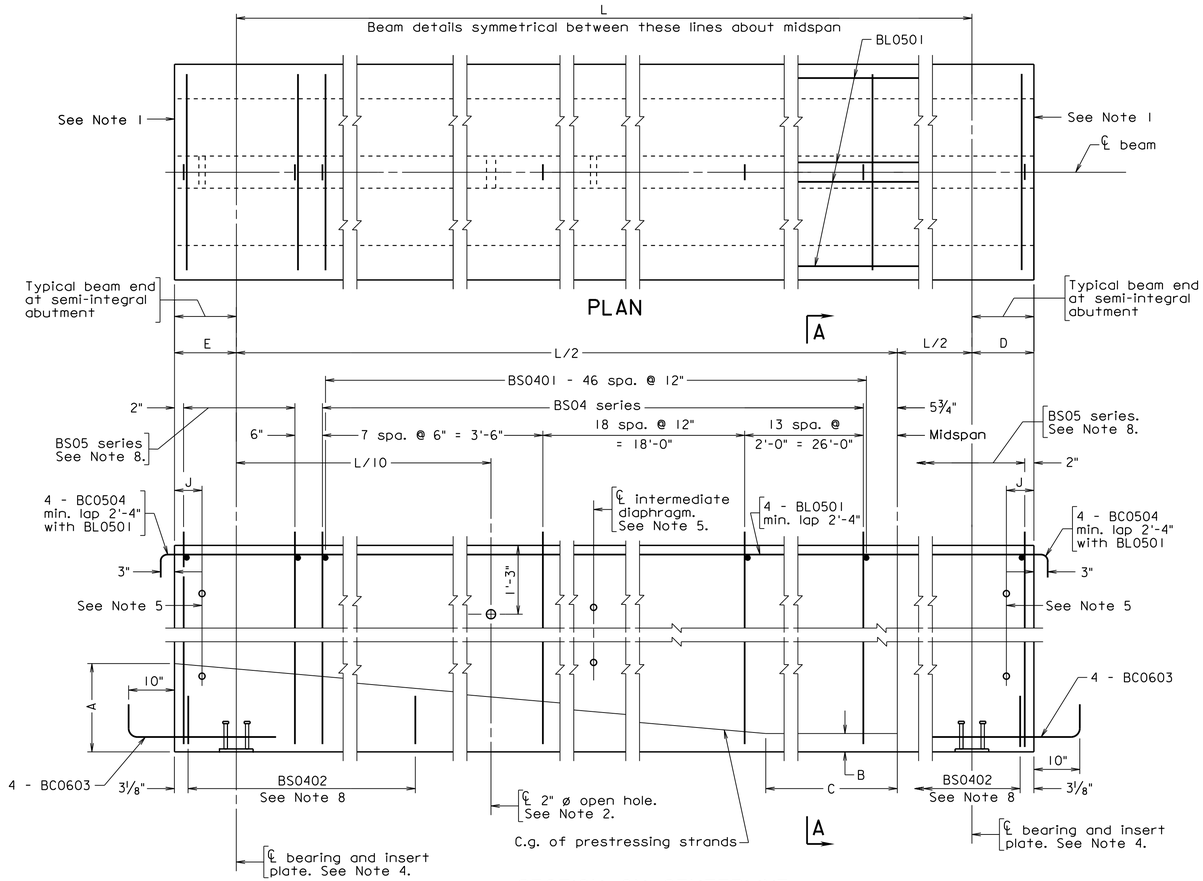

SECTION ON CENTERLINE

Notes:

1. At full or semi-integral abutment, end strands may project 1" + from beam after clipping. End of beam shall be roughened in accordance with Section 405.05 of the Road and Bridge Specifications. End of beams at these locations shall not have epoxy applied.
2. Beams shall have 2" ø open holes formed with nonrigid tubing only on stream crossings. Holes may be slightly shifted to clear reinforcing bars and strands.
3. Threaded inserts shall be provided at all exterior beams and at interior beams where line of diaphragms is discontinued at an interior beam. Threaded inserts shall be ⅞" - 9 NC threaded plain ferrule inserts suitable for thin precast concrete elements having a minimum ultimate mechanical tensile strength of 8,000 pounds.
4. For details of insert plate, see sheet 24.
5. 1½" ø open holes shall be formed with non-rigid tubing. For location of end and intermediate diaphagms, see Erection Diagram on sheet 22. For location and number of holes or inserts required for end diaphragms and intermediate diaphragms and at integral abutments, see sheets 25 and 26.
6. The Contractor, after written approval from the Engineer, may use different prestressing strand arrangement provided that the total prestressing force and c.g. are the same as shown on the plans.
7. 4 - 0.6" ø strands stressed to 8,000 lbs. may be substituted for 4 - BL05 series bars. Maximum distance from the outside strands to the flange edge may be increased from 3" to no more than 4".
8. For beam end reinforcing details, dead load deflection diagram reinforcing steel schedule and miscellaneous details, see sheets 24 and 25.
9. For beam ends that are exposed and will not be embedded into concrete, use 1" deep recesses around local strand groups with 2" minimum edge clearances and fill with pneumatically applied mortar immediately after clipping strands. An approved epoxy mortar covering the ends of strands with a minimum thickness of ⅛" may be used as an alternate. Allow strands to cool before mortar is applied. After mortar is allowed to cure, the entire end of beam shall be covered with epoxy type EP-3T.
10. Design and detailing of these plans are based on the design cambers at erection (see Data and Dimension Table) and the maximum tolerance for camber differential from design camber at erection indicated in the Specifications. Design camber at erection is computed using Precast/Prestressed Concrete Institute (PCI) multipliers.
11. Lifting points assumed not to exceed ⅔ height from the end of beam.

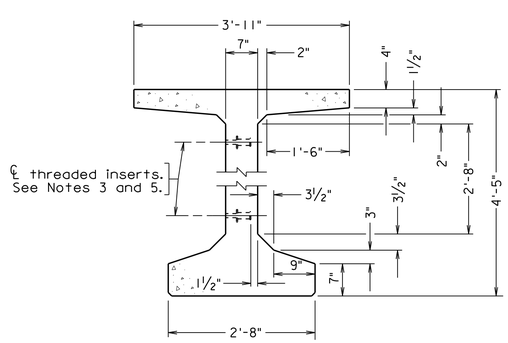

TYPICAL BEAM SECTION

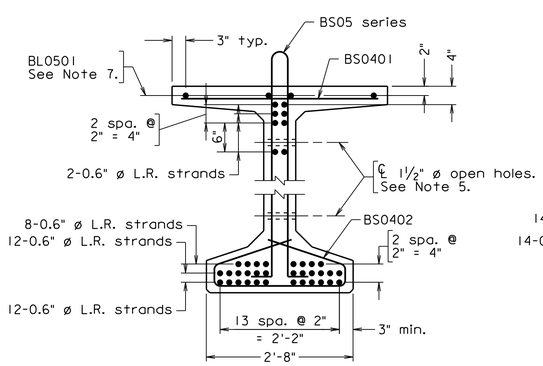

END VIEW
For dimensions not shown, see Typical Beam Section.

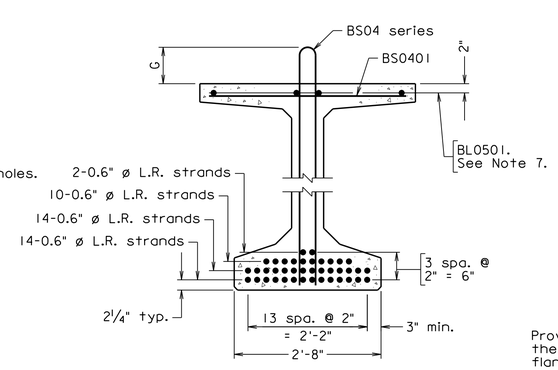

SECTION A-A
For dimensions not shown, see Typical Beam Section.

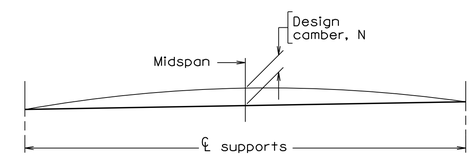

CAMBER DIAGRAM
Not to scale

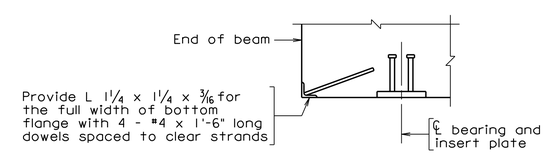

TYPICAL BOTTOM FLANGE EDGE DETAIL
Not to scale

DATA AND DIMENSION TABLE

Span	Beam	Prestr. force at Release lb. per strand	No. and size of strands / beam	Design Camber, N: At Release in.	Design Camber, N: At Erection in.	A ft.-in.	B in	C ft.-in.	D ft.-in.	E ft.-in.	F in.	G in.	J in.	L ft.-in.	Assuming swivel hold-down device: Anticipated uplift force per strand, Fv - kips	Anticipated total uplift force all strands, ΣFv - kips	Anticipated number of hold-down devices per location
a	All	43,940	40 - 0.6" dia.	2¾"	4⅞"	1'-0¼"	4¼"	10'-5"	2'-1"	2'-1"	-	••	5⅝"	100'-0"	3.8	29.8	1

•• For G dimensions, see sheet 25.

Scale: ¾" = 1'-0" unless otherwise noted

PRELIMINARY PLANS
THESE PLANS NOT TO BE USED FOR CONSTRUCTION

Dewberry

Dewberry Engineers Inc.
8401 ARLINGTON BLVD.
FAIRFAX, VA 22031
PHONE: 703.849.0100
FAX: 703.849.0518

HARTLAND DRIVE OVER BROAD RUN TRIBUTARY
LOUDOUN COUNTY
CPAP-2020-0009

SEAL

DEWBERRY ENGINEERS INC.
FAIRFAX, VA
STRUCTURAL ENGINEER

No.	DATE	BY	Description

REVISIONS

DESIGNED BY	MM
DRAWN BY	MM
CHECKED BY	EJA
DATE	APRIL 2020

TITLE

PRESTRESSED CONCRETE BULB-T PCBT-53

PROJECT NO. 50113885

XXX-XX

SHEET NO. 23 of 49

Received by VMRC September 1, 2020 /blh

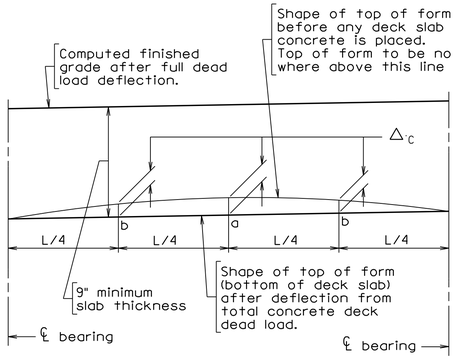

Adjustment of deck slab forms to correct for dead load deflections shall be made by varying thickness of concrete bolster between slab and beam without alteration of slab thickness. Longitudinal screed should be set above final finished grade by amounts = Δ_{C2}

Δ_{C1} = Deflection of beam from dead load of concrete deck slab, bolsters and diaphragms and does not include the deflection of the beam from its own weight.

Δ_{C2} = Deflection of composite section from dead load (e.g. parapet and curb added after deck is cast).

$\Delta_C = \Delta_{C1} + \Delta_{C2}$

ANTICIPATED DEAD LOAD DEFLECTION

Span	Beam	At a		At b	
		Δ_{C1}	Δ_{C2}	Δ_{C1}	Δ_{C2}
a	1 and 5	1 7/8"	1/8"	1 1/4"	1/8"
	2 - 4	2 3/8"	1/8"	1 5/8"	1/8"

DEAD LOAD DEFLECTION DIAGRAM

REINFORCING STEEL SCHEDULE

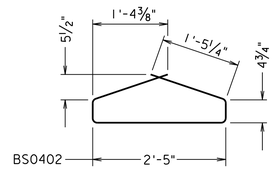

BS0402

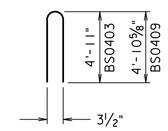

BS0403, BS0409

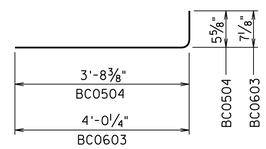

BC0603 and BC0504

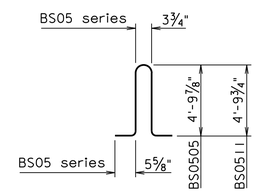

BS0505 and BS0511

Mark	Size	No.	Length	Pin ø	Location
BC0603*	#6		4'-5 1/2"	3 3/4"	Bott. flange - full or semi-integral
BC0504*	#5		4'-0 1/2"	2 1/2"	Top flange - full or semi-integral
BS0401	#4		3'-7"	——	Top flange transverse
BS0402	#4		5'-9 3/4"	2"	Bottom flange - confinement
BS0403*	#4		9'-11 3/4"	2 1/2"	Stirrup outside anchorage zone, interior beams
BS0505*	#5		10-6 1/4"	2 1/2"	Anchorage zone stirrup, interior beams
BS0409*	#4		9'-11"	2 1/2"	Stirrup outside anch. zone - exterior beams
BS0511*	#5		10'-6"	2 1/2"	Anchorage zone stirrup - exterior beams
BL0501	#5		36'-3"	——	Top flange longitudinal

Mark	Size	No. each length	From	To	Vary by	Pin ø

Dimensions in bending diagram are out-to-out of bars.

Reinforcing bars shown in the above schedule are for all beams shown on sheet 23.

* Denotes reinforcing bars that shall be corrosion resistant reinforcing steel, Class I.

At the Contractor's option and at no additional cost, bar BS0402 may be fabricated as a two piece bar with a minimum 1'-4" lap.

Notes:

Insert plate shall provide uniform bearing over its entire contact area.

For beam details and notes, see sheet 23.

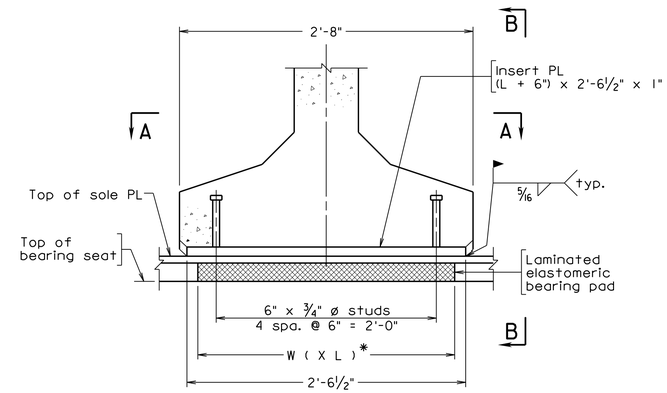

INSERT PLATE DETAILS

* For laminated elastomeric bearing pad dimensions, see sheet 20.

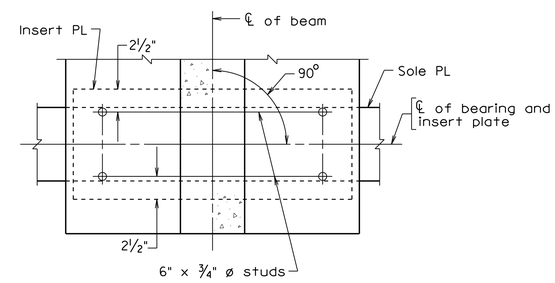

SECTION A-A

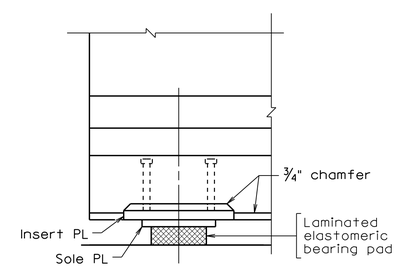

VIEW B-B

PRELIMINARY PLANS

THESE PLANS NOT TO BE USED FOR CONSTRUCTION

Not to scale

Dewberry

Dewberry Engineers Inc.
8401 ARLINGTON BLVD.
FAIRFAX, VA 22031
PHONE: 703.849.0100
FAX: 703.849.0518

HARTLAND DRIVE OVER BROAD RUN TRIBUTARY
LOUDOUN COUNTY
CPAP-2020-0009

SEAL

DEWBERRY ENGINEERS INC.
FAIRFAX, VA
STRUCTURAL ENGINEER

No.	DATE	BY	Description

REVISIONS

DESIGNED BY MM
DRAWN BY MM
CHECKED BY EJA
DATE APRIL 2020

TITLE

PRESTRESSED CONCRETE BULB-T MISCELLANEOUS BEAM DETAILS - 1

PROJECT NO. 50113885

XXX-XX

Received by VMRC September 1, 2020 /blh

Notes:

For beam details and notes, see sheets 23 and 24.

BS series bars may be shifted as directed by the Engineer to clear inserts, open holes and studs in insert plates.

All bolsters in excess of 4 inches in height shall be reinforced. The bolster is anticipated to exceed 4 inches 25'-0" from each end of the span. Actual required reinforcement length will vary based on the beam cambers.

SB0401 and SL0401 bars shall be CRR Class I.

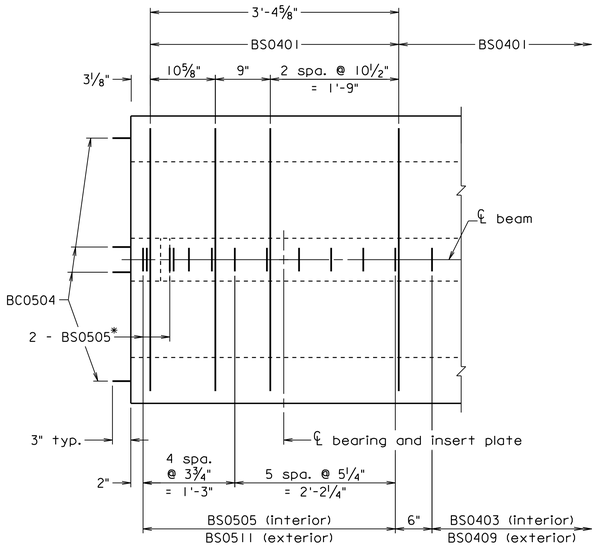

*indicates bundled bars at each location (e.g., 2 arrowheads, first two locations)

AT SEMI-INTEGRAL ABUTMENT (TYP. BOTH ENDS)
TOP FLANGE AND WEB REINFORCEMENT END DETAILS

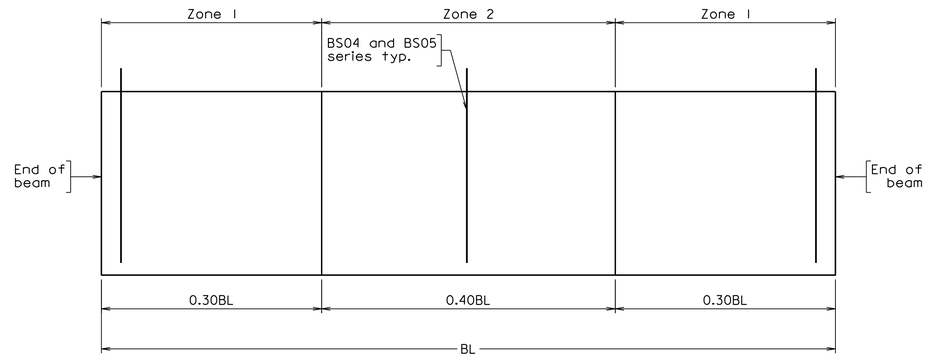

STIRRUP LAYOUT ABOVE BEAM

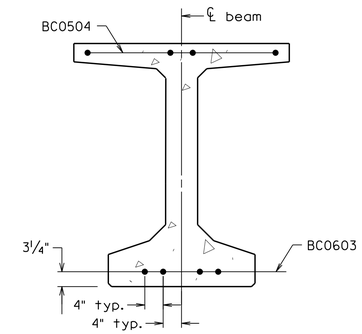

END VIEW AT
SEMI-INTEGRAL BACKWALL
Scale: ¾" = 1'-0"

STIRRUP PROJECTION ABOVE BEAM				
Span	Beam	Value	Zone 1 (in.)	Zone 2 (in.)
a	1 and 5	G	8⅛"	7⅝"
	2 - 4	G	8¼"	8"

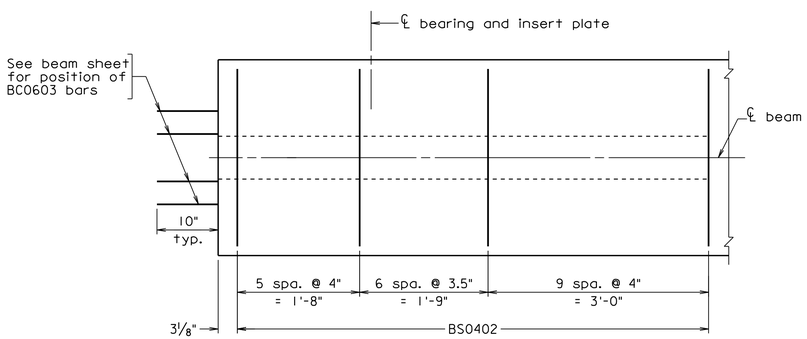

AT SEMI-INTEGRAL ABUTMENT (TYP. BOTH ENDS)
BOTTOM FLANGE REINFORCEMENT END DETAILS

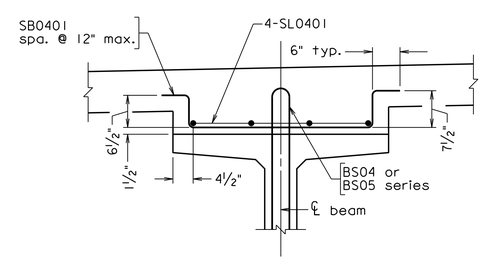

TYPICAL BOLSTER REINFORCEMENT
Scale: ¾" = 1'-0"

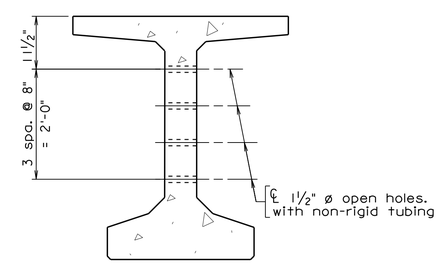

END SECTION SHOWING
LOCATION OF 1½" Ø HOLES
AT SEMI-INTEGRAL BACKWALL
Scale: ¾" = 1'-0"

PRELIMINARY PLANS

THESE PLANS NOT TO BE USED FOR CONSTRUCTION

Scale: 1" = 1'-0" unless otherwise noted

025

Dewberry

Dewberry Engineers Inc.
8401 ARLINGTON BLVD.
FAIRFAX, VA 22031
PHONE: 703.849.0100
FAX: 703.849.0518

HARTLAND DRIVE
OVER
BROAD RUN TRIBUTARY
LOUDOUN COUNTY
CPAP-2020-0009

SEAL

DEWBERRY ENGINEERS INC.
FAIRFAX, VA
STRUCTURAL ENGINEER

No.	DATE	BY	Description

REVISIONS

DESIGNED BY MM
DRAWN BY MM
CHECKED BY EJA
DATE APRIL 2020

TITLE
PRESTRESSED CONCRETE BULB-T MISCELLANEOUS BEAM DETAILS - 2

PROJECT NO. 50113885

XXX-XX

Received by VMRC September 1, 2020 /blh

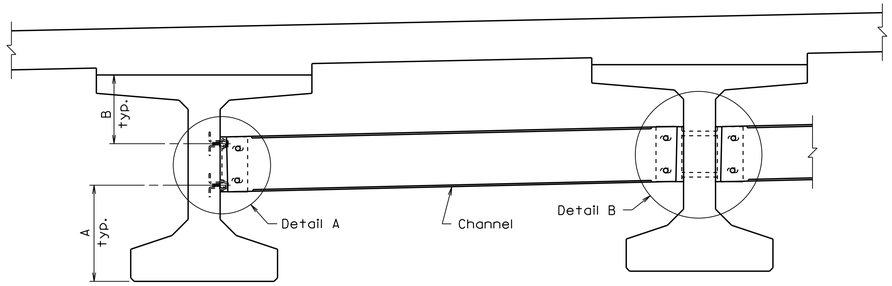

PART TRANSVERSE SECTION

Use Detail A at exterior beams and interior beams where line of diaphragms is discontinued at interior beam. Use Detail B at interior beams where line of diaphragms is continuous across the structure.

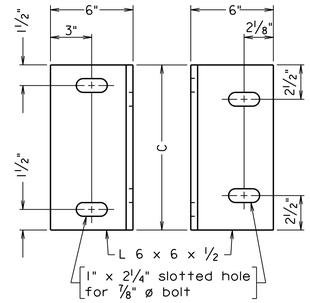

BEAM FACE DIAPHRAGM FACE

CONNECTOR PLATE DETAIL

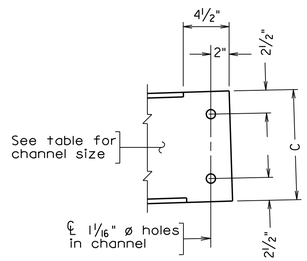

CHANNEL DETAIL

Notes:

All structural steel shall be ASTM A36.

All bolts shall be ⅞" ø H.S. bolts, ASTM F3125, Grade A325.

All H.S. bolts used for steel-to-steel connections shall be tightened in accordance with Section 407 of the Specifications.

All H.S. bolts installed in threaded inserts shall be tightened to a snug tight condition. Rotational capacity test is not required.

All diaphragm materials including bolts, nuts and washers shall be galvanized.

All threaded inserts shall be ⅞" - 9 NC threaded plain ferrule inserts suitable for thin precast concrete elements having a minimum ultimate mechanical tensile strength of 8,000 pounds.

A ½" bent plate may be used in lieu of the L 6 x 6 x ½ connector plate shown for skew angles less than or equal to 20 degrees. The ½" plate shall be shop bent to conform with the line of diaphragms.

Payment for furnishing and installing steel intermediate diaphragms shall be included in the contract unit price for prestressed concrete members.

DIMENSION TABLE

BEAM TYPE	A	B	C	CHANNEL SIZE
PCBT-53	1'-11½"	1'-5½"	1'-3"	C15x33.9

Skew angle	θ
≤ 20°	90°- skew angle
> 20°	90°

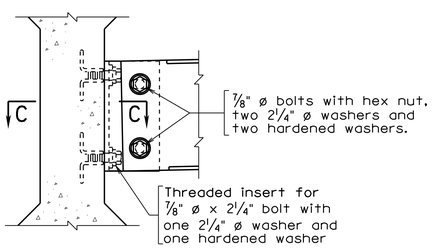

DETAIL A

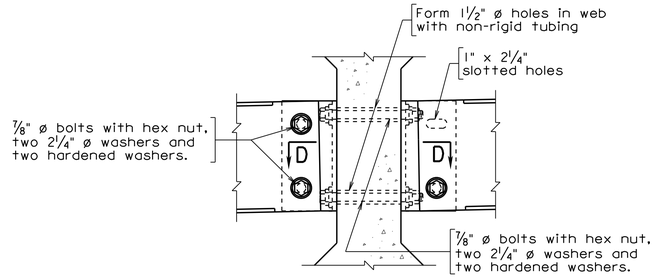

DETAIL B

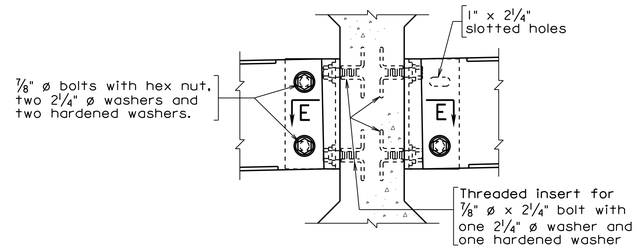

ALTERNATE DETAIL B

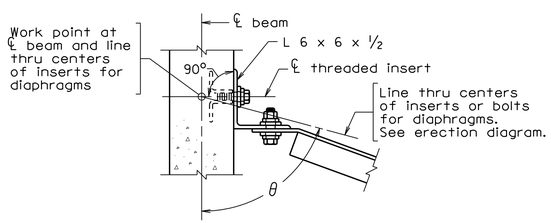

SECTION C-C

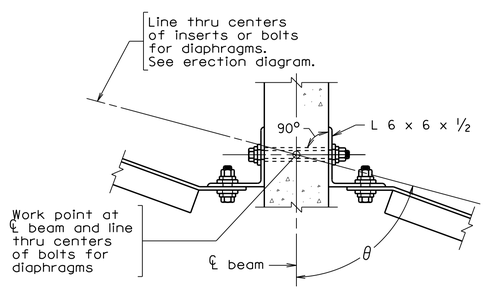

SECTION D-D

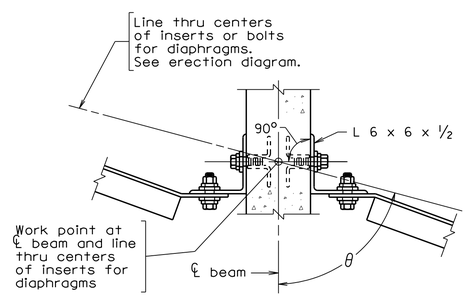

SECTION E-E

PRELIMINARY PLANS

THESE PLANS NOT TO BE USED FOR CONSTRUCTION

Not to scale

026

Dewberry

Dewberry Engineers Inc.
8401 ARLINGTON BLVD.
FAIRFAX, VA 22031
PHONE: 703.849.0100
FAX: 703.849.0518

HARTLAND DRIVE OVER BROAD RUN TRIBUTARY
LOUDOUN COUNTY
CPAP-2020-0009

SEAL

DEWBERRY ENGINEERS INC.
FAIRFAX, VA
STRUCTURAL ENGINEER

No.	DATE	BY	Description

REVISIONS

DESIGNED BY MM
DRAWN BY MM
CHECKED BY GJM
DATE APRIL 2020

TITLE

PCBT INTERMEDIATE DIAPHRAGM DETAILS

PROJECT NO. 50113885

XXX-XX

Received by VMRC September 1, 2020 /blh

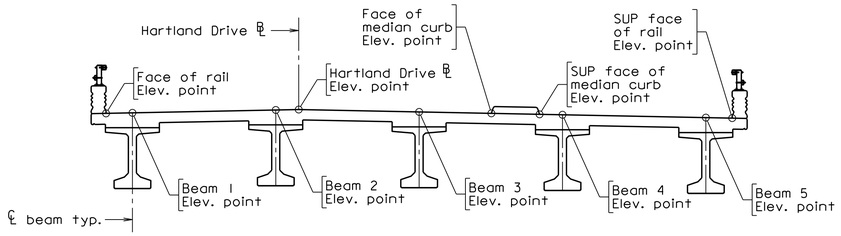

TOP OF SLAB ELEVATIONS - TRANSVERSE SECTION

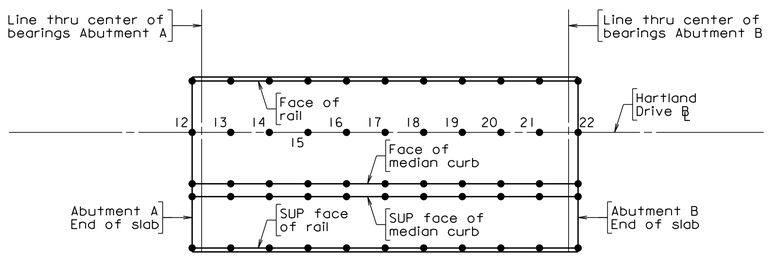

TOP OF SLAB ELEVATIONS - PLAN

Notes:

Slab elevations as shown in tables are on top of finished roadway as shown on Transverse Section.

Straight line interpolation for intermediate elevations on top of finished roadway may be made in any direction between any two adjacent points.

TOP OF SLAB ELEVATIONS ALONG ℄ BEAMS												
Span	Point	1	2	3	4	5	6	7	8	9	10	11
a	Beam 1	315.46	315.72	315.98	316.24	316.50	316.76	317.02	317.28	317.53	317.79	318.05
	Beam 2	315.68	315.94	316.20	316.46	316.71	316.97	317.23	317.49	317.75	318.01	318.27
	Beam 3	315.53	315.79	316.05	316.31	316.57	316.83	317.09	317.34	317.60	317.86	318.12
	Beam 4	315.31	315.57	315.83	316.09	316.35	316.61	316.87	317.13	317.39	317.65	317.90
	Beam 5	315.10	315.36	315.62	315.88	316.13	316.39	316.65	316.91	317.17	317.43	317.69

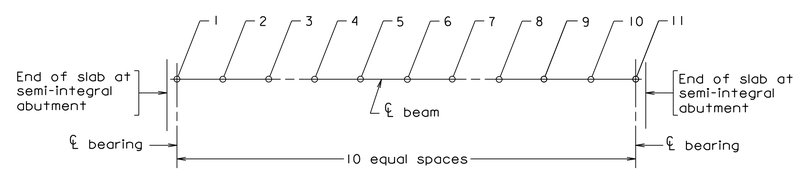

TOP OF SLAB ELEVATION ALONG ℄ BEAMS - PLAN

Showing points of top of slab elevations

TOP OF SLAB ELEVATIONS											
Point	12	13	14	15	16	17	18	19	20	21	22
Face of Rail	315.36	315.63	315.90	316.17	316.44	316.72	316.99	317.26	317.53	317.81	318.08
Hartland Drive ℄	315.65	315.92	316.19	316.46	316.74	317.01	317.28	317.55	317.83	318.10	318.37
Face of Median Curb	315.36	315.63	315.90	316.17	316.44	316.72	316.99	317.26	317.53	317.81	318.08
SUP Face of Median Curb	315.28	315.56	315.83	316.10	316.37	316.64	316.92	317.19	317.46	317.73	318.01
SUP Face of Rail	314.99	315.26	315.54	315.81	316.08	316.35	316.63	316.90	317.17	317.44	317.72

PRELIMINARY PLANS

THESE PLANS NOT TO BE USED FOR CONSTRUCTION

Not to scale

Dewberry

Dewberry Engineers Inc.
8401 ARLINGTON BLVD.
FAIRFAX, VA 22031
PHONE: 703.849.0100
FAX: 703.849.0518

HARTLAND DRIVE OVER BROAD RUN TRIBUTARY
LOUDOUN COUNTY
CPAP-2020-0009

SEAL

DEWBERRY ENGINEERS INC.
FAIRFAX, VA
STRUCTURAL ENGINEER

No.	DATE	BY	Description

REVISIONS

DESIGNED BY MM
DRAWN BY JPD
CHECKED BY KLM
DATE APRIL 2020

TITLE

TOP OF SLAB ELEVATIONS

PROJECT NO. 50113885

XXX-XX

Received by VMRC September 1, 2020 /blh

Notes:

For spacing of SL04 and ML03 bars, see sheet 21.

For bolster reinforcement detail, see sheet 25.

For rail details see sheets 29 and 30.

All reinforcing steel in the deck slab, median, and railings shall be Corrosion Resistant Reinforcing Steel, Class I.

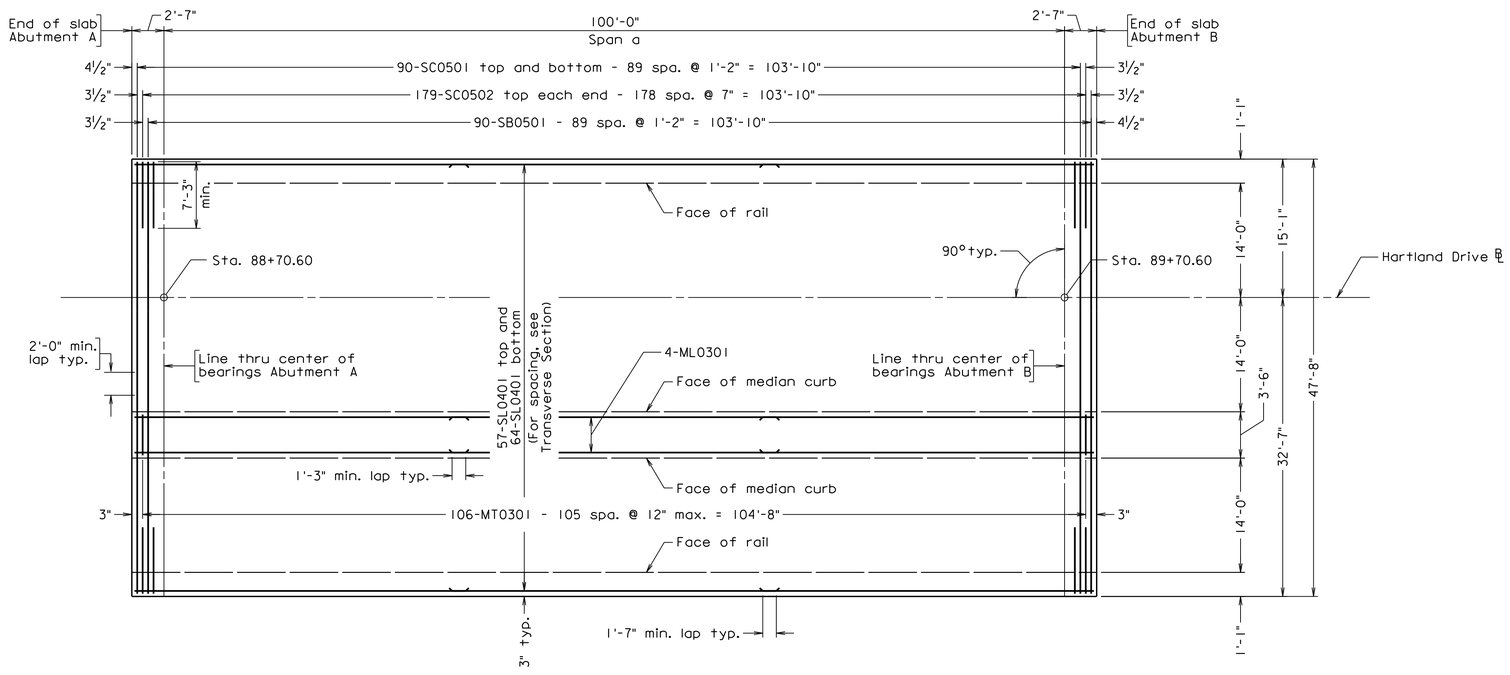

DECK SLAB PLAN

Not to scale

PRELIMINARY PLANS

THESE PLANS NOT TO BE USED FOR CONSTRUCTION

028

Dewberry

Dewberry Engineers Inc.
8401 ARLINGTON BLVD.
FAIRFAX, VA 22031
PHONE: 703.849.0100
FAX: 703.849.0518

HARTLAND DRIVE OVER BROAD RUN TRIBUTARY

LOUDOUN COUNTY

CPAP-2020-0009

SEAL

DEWBERRY ENGINEERS INC.
FAIRFAX, VA
STRUCTURAL ENGINEER

No.	DATE	BY	Description

REVISIONS

DESIGNED BY TPV

DRAWN BY JPD

CHECKED BY KLM

DATE APRIL 2020

TITLE

DECK SLAB PLAN

PROJECT NO. 50113885

XXX-XX

Received by VMRC September 1, 2020 /blh

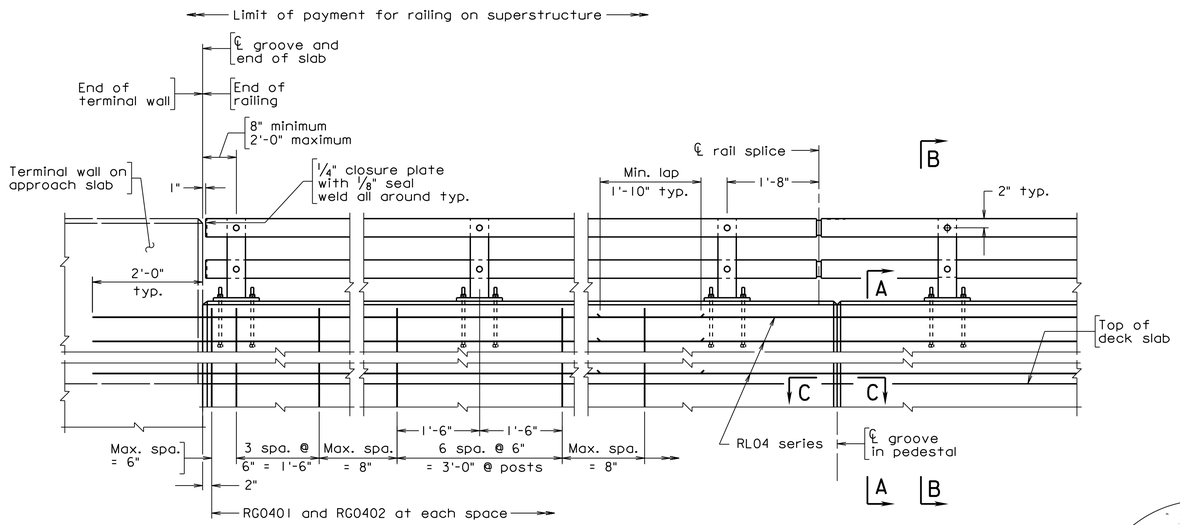

ABUTMENTS
Terminal Wall on Approach Slab

ELEVATION

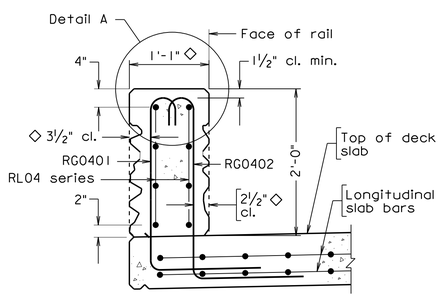

SECTION A-A
Scale: 1" = 1'-0"

Transverse rebars in deck slab not shown for clarity

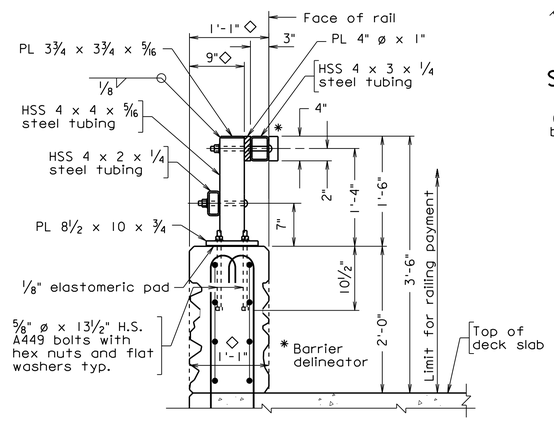

SECTION B-B
Scale: 1" = 1'-0"

Bolts through base plate shall be contained inside rebar cage

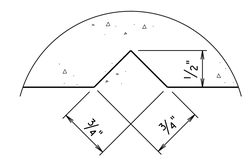

SECTION C-C
Full scale

Groove detail for both sides of rail

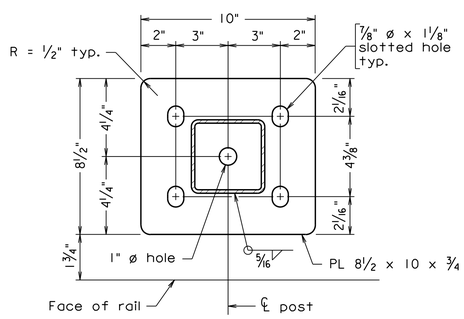

BASE PLATE DETAIL
Not to scale

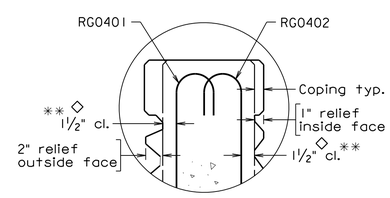

DETAIL A
Not to scale

Scale: 3/4" = 1'-0" unless otherwise noted

Notes:

Plan dimensions shown are measured in the respective horizontal and vertical planes.

The Contractor shall determine all dimensions and details necessary for installation.

All concrete shall be Low Shrinkage Class A4 Modified.

All bevels for concrete shall be 3/4".

All reinforcing steel shall be Corrosion Resistant Reinforcing Steel, Class I.

For details and reinforcing steel schedule of terminal wall, see sheets 31 and 32.

Posts and rail members shall be ASTM A500 Grade B steel. Plates shall be ASTM A36 steel. Steel pipe sleeves shall be ASTM A53.

Bolts for attaching rails to post are 3/4" diameter round head (with slot in head), ASTM A449. All other bolts shall be ASTM F3125 Grade A325 unless otherwise indicated in the details. Nuts shall be ASTM A563 Grade DH or ASTM A194 Grade 2H. Washers shall be ASTM F436.

For bolts attaching rails to posts, bolt extensions beyond nut shall be limited to the smaller of one and a half finishing turns or 1/4". If the extension is longer, excess shall be cut off and the edges of the bolt end ground so that no sharp edges remain. Cold galvanizing shall be applied to damaged galvanized areas.

All bolts shall be snug tightened.

All steel shall be hot dip galvanized.

Posts shall be equally spaced within a span. Maximum spacing is 6'-8".

Posts shall be seated on neoprene pads 1/8" minimum thickness, having a nominal durometer hardness of 60. Pads shall conform to post base dimensions.

Posts shall be vertical in transverse direction and normal to longitudinal profile grade. Cut bottom of posts to meet these configurations.

Rails to be continuous over a minimum of 3 posts before splicing.

Bid price for architectural treatment includes concrete in relief and coping.

◇ For dimensions and architectural treatment details, see sheet 33. For minimum cover, see Detail A.

** The cover tolerance referenced in the VDOT Road and Bridge Specifications as -0" to +1/2" is shifted to -1/4" to +1/4" for placement of the RG04 series bars.

For additional notes, see sheet 30.

REINFORCING STEEL SCHEDULE

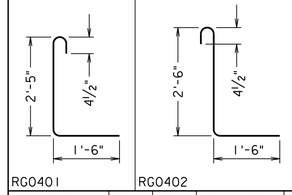

RG0401 RG0402

Mark	Size	No.	Length	Pin ø	Location
RG0401	#4			3"	Parapet
RG0402	#4			3"	Parapet
RL04	#4			—	Parapet

Dimensions in bending diagram are out-to-out of bars.

PRELIMINARY PLANS

THESE PLANS NOT TO BE USED FOR CONSTRUCTION

Dewberry

Dewberry Engineers Inc.
8401 ARLINGTON BLVD.
FAIRFAX, VA 22031
PHONE: 703.849.0100
FAX: 703.849.0518

HARTLAND DRIVE OVER BROAD RUN TRIBUTARY
LOUDOUN COUNTY
CPAP-2020-0009

SEAL

DEWBERRY ENGINEERS INC.
FAIRFAX, VA
STRUCTURAL ENGINEER

No.	DATE	BY	Description

REVISIONS

DESIGNED BY KLM
DRAWN BY KLM
CHECKED BY GJM
DATE APRIL 2020

TITLE
42" - CPSR RAILING WITH ARCHITECTURAL TREATMENT

PROJECT NO. 50113885

XXX-XX

Received by VMRC September 1, 2020 /blh

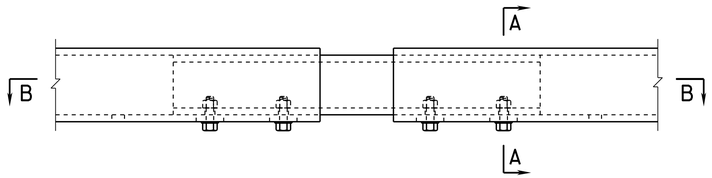

ELEVATION VIEW

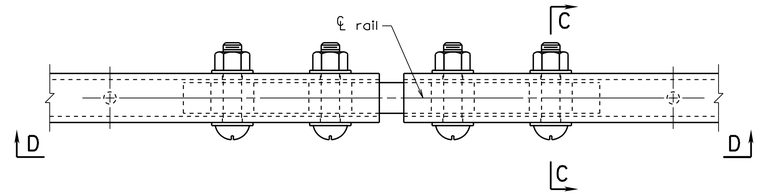

PLAN

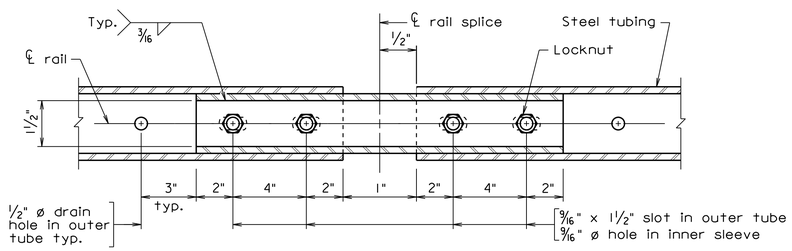

SECTION B-B

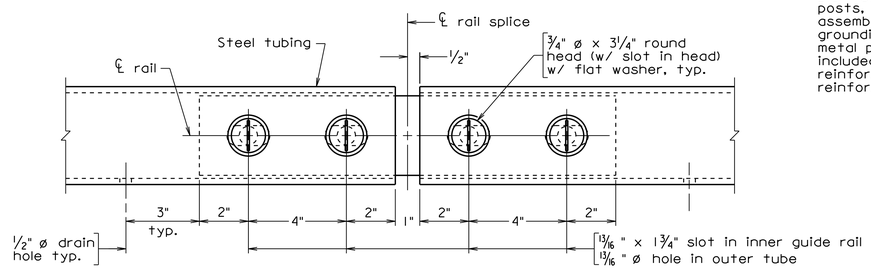

VIEW D-D

Notes (cont'd):

Drain holes shall be 1/2" diameter and shall be provided in all rails approximately half-way between posts. Drain holes shall be provided at each end of rail.

Barrier delineator size, color, and spacing shall be in accordance with the Specifications.

Maximum spacing of grooves in pedestal shall be limited to 3 x post spacing, shall be centered between posts and shall be no closer than 10'-0" to ends of pedestal.

Alternate details for inner sleeve rail fabrication and bolted connection to outer tube may be submitted, but only used if approved by the Engineer. No thru-bolt connections will be approved.

Bid item for railing shall include rails, rail posts, bearing pads, bolts, anchor assemblies, sleeves, barrier delineators, grounding materials and other associated metal parts as shown on the plans. Also included is concrete noted in the plans and reinforcing steel indicated in the reinforcing steel schedule.

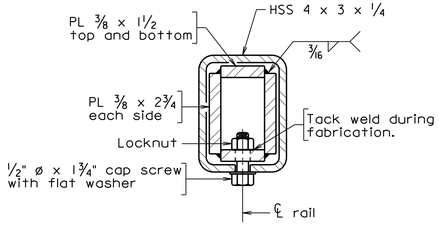

SECTION A-A
SECTION AT RAIL SPLICE

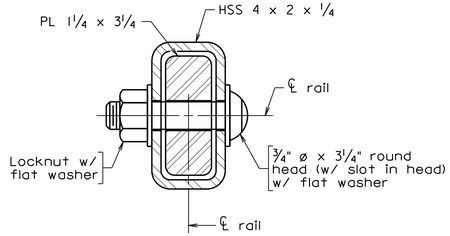

SECTION C-C
SECTION AT RAIL SPLICE

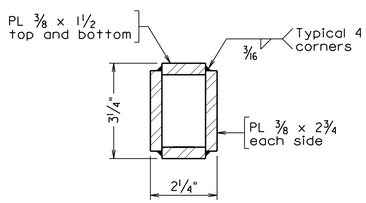

FINISHED DIMENSIONS OF INNER SLEEVE RAIL

INSIDE RAIL SPLICE DETAILS

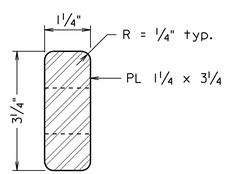

FINISHED DIMENSIONS OF INNER GUIDE RAIL

OUTSIDE RAIL SPLICE DETAILS

Not to scale

PRELIMINARY PLANS

THESE PLANS NOT TO BE USED FOR CONSTRUCTION

Dewberry

Dewberry Engineers Inc.
8401 ARLINGTON BLVD.
FAIRFAX, VA 22031
PHONE: 703.849.0100
FAX: 703.849.0518

HARTLAND DRIVE OVER BROAD RUN TRIBUTARY
LOUDOUN COUNTY
CPAP-2020-0009

SEAL

DEWBERRY ENGINEERS INC.
FAIRFAX, VA
STRUCTURAL ENGINEER

No.	DATE	BY	Description

REVISIONS

DESIGNED BY KLM
DRAWN BY KLM
CHECKED BY GJM
DATE APRIL 2020

TITLE

CPSR RAIL SPLICE DETAILS

PROJECT NO. 50113885

XXX-XX

SHEET NO. 30 of 49

Received by VMRC September 1, 2020 /blh

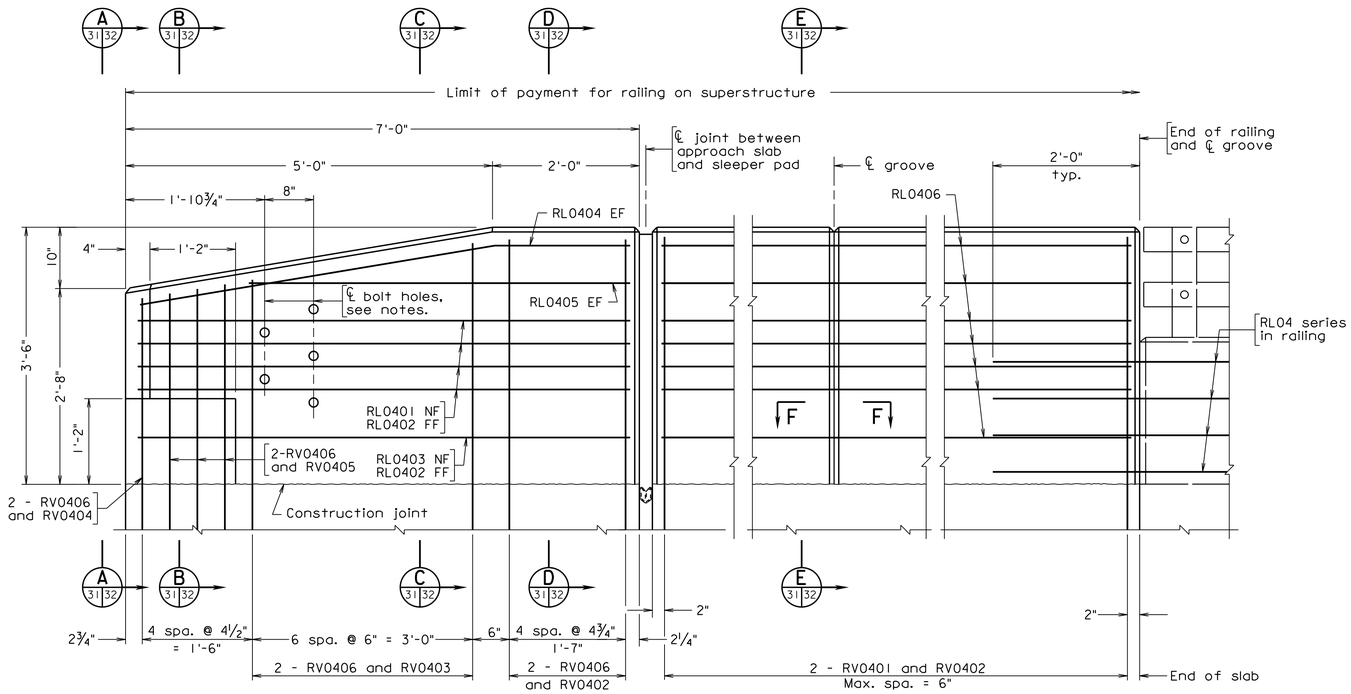

TERMINAL WALL ON SLEEPER PAD

APPROACH SLAB

ELEVATION

Notes:

Plan dimensions shown are measured in the respective horizontal and vertical planes.

The Contractor shall determine all dimensions and details necessary for installation.

All concrete shall be Low Shrinkage Class A4 Modified.

All bevels for concrete shall be ¾".

All reinforcing steel shall be Corrosion Resistant Reinforcing Steel, Class I.

For details and reinforcing steel schedule of railing, see sheet 29.

Each terminal wall shall be cast as one piece.

Terminal walls are detailed to take guardrail attachment for MGS.

Holes, where shown, shall be formed with sleeves of 1¼" diameter nominal pipe.

Spacing of grooves shall be approximately 8'-0".

Bid price for architectural treatment includes concrete in relief and coping.

◇ For dimensions and architectural treatment details, see sheet 33. For minimum cover, see Detail A.

REINFORCING STEEL SCHEDULE

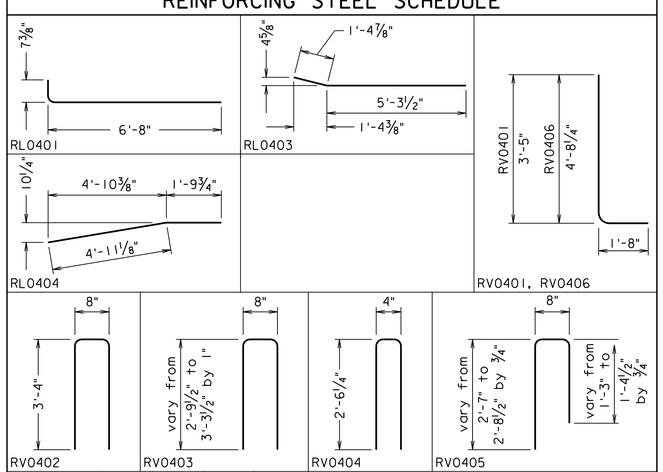

Mark	Size	No.	Pin ø	Length	Location
RL0401	#4		6"	7'-2"	Terminal wall
RL0402	#4		——	6'-8"	Terminal wall
RL0403	#4		3"	6'-8½"	Terminal wall
RL0404	#4		3"	6'-9"	Terminal wall
RL0405	#4		——	5'-2"	Terminal wall
RV0401	#4		3"	4'-11¾"	Terminal wall
RV0402	#4		3"	7'-1½"	Terminal wall
RV0403	#4		3"	From 6'-0½" to 7'-0½"	Terminal wall
RV0404	#4		3"	5'-2"	Terminal wall
RV0405	#4		3"	From 4'-3½" to 4'-6½"	Terminal wall
RV0406	#4		3"	6'-3"	Terminal wall

Dimensions in bending diagram are out-to-out of bars.

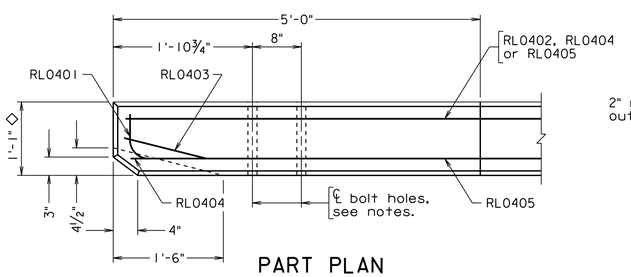

PART PLAN

RV04 series bars not shown for clarity

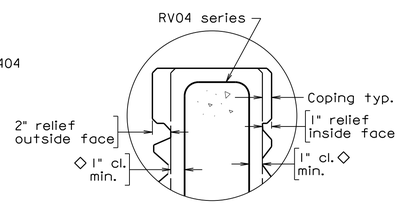

DETAIL A

Not to scale

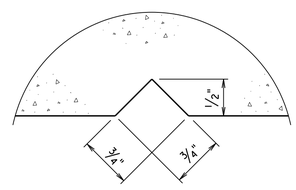

SECTION F-F

Full scale

Groove detail for both sides of rail

PRELIMINARY PLANS

THESE PLANS NOT TO BE USED FOR CONSTRUCTION

Scale: 1" = 1'-0" unless otherwise noted

031

Dewberry

Dewberry Engineers Inc.
8401 ARLINGTON BLVD.
FAIRFAX, VA 22031
PHONE: 703.849.0100
FAX: 703.849.0518

HARTLAND DRIVE OVER BROAD RUN TRIBUTARY
LOUDOUN COUNTY
CPAP-2020-0009

SEAL

DEWBERRY ENGINEERS INC.
FAIRFAX, VA
STRUCTURAL ENGINEER

No.	DATE	BY	Description

REVISIONS

DESIGNED BY KLM
DRAWN BY KLM
CHECKED BY GJM
DATE APRIL 2020

TITLE 42" - CPSR TERMINAL WALL WITH ARCHITECTURAL TREATMENT - 1

PROJECT NO. 50113885

XXX-XX

SHEET NO. 31 of 49

Received by VMRC September 1, 2020 /blh

Notes:

For terminal wall elevation reinforcing steel schedule and notes, see sheet 31.

For details and reinforcing steel schedule of railing, see sheet 29.

For additional details of sleeper pad see sheets 34, 35 and 36.

◇ For dimensions and architectural treatment details, see sheet 33. For minimum cover, see Detail A.

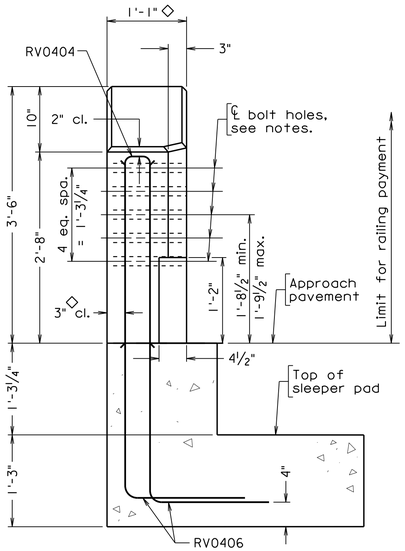

VIEW A (31|32)

Showing RV04 bars only in terminal wall for clarity
Sleeper pad reinforcement and dimensions not shown for clarity

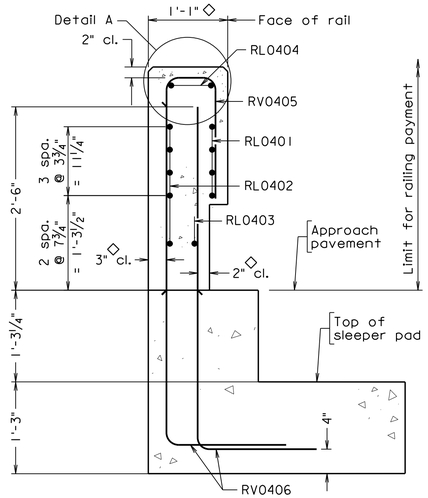

SECTION B (31|32)

Sleeper pad reinforcement and dimensions not shown for clarity

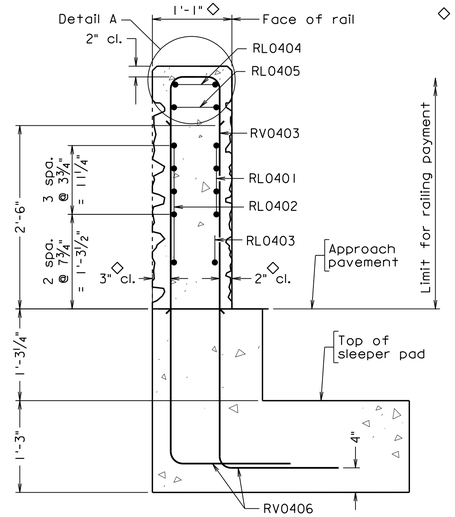

SECTION C (31|32)

Sleeper pad reinforcement and dimensions not shown for clarity

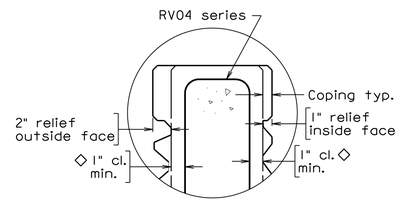

DETAIL A
Not to scale

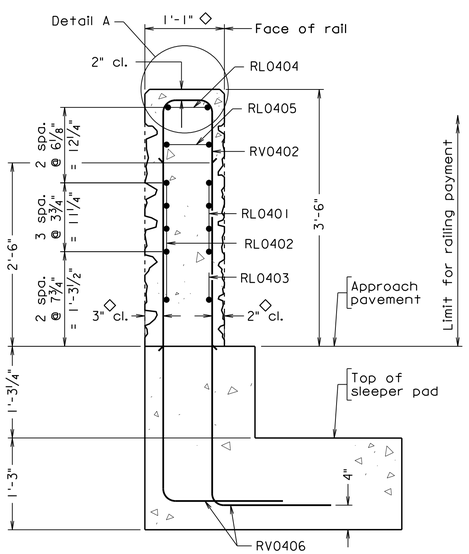

SECTION D (31|32)

Sleeper pad reinforcement and dimensions not shown for clarity

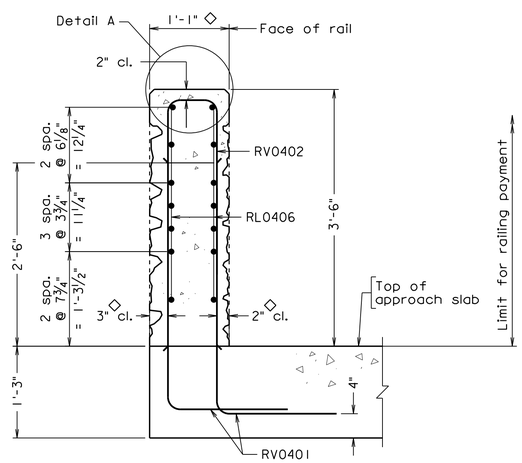

SECTION E (31|32)

Approach slab reinforcement not shown for clarity

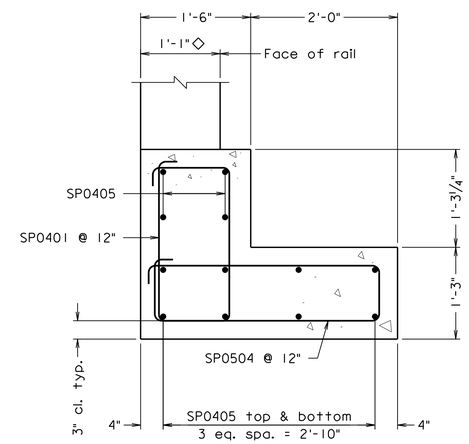

SECTION F (36|32)

Terminal wall reinforcement not shown for clarity

Scale: 1" = 1'-0" unless otherwise noted

PRELIMINARY PLANS

THESE PLANS NOT TO BE USED FOR CONSTRUCTION

Dewberry

Dewberry Engineers Inc.
8401 ARLINGTON BLVD.
FAIRFAX, VA 22031
PHONE: 703.849.0100
FAX: 703.849.0518

HARTLAND DRIVE OVER BROAD RUN TRIBUTARY
LOUDOUN COUNTY
CPAP-2020-0009

SEAL

DEWBERRY ENGINEERS INC.
FAIRFAX, VA
STRUCTURAL ENGINEER

No.	DATE	BY	Description

REVISIONS

DESIGNED BY	KLM
DRAWN BY	KLM
CHECKED BY	GJM
DATE	APRIL 2020

TITLE 42" - CPSR TERMINAL WALL WITH ARCHITECTURAL TREATMENT - 2

PROJECT NO. 50113885

XXX-XX

Received by VMRC September 1, 2020 /blh

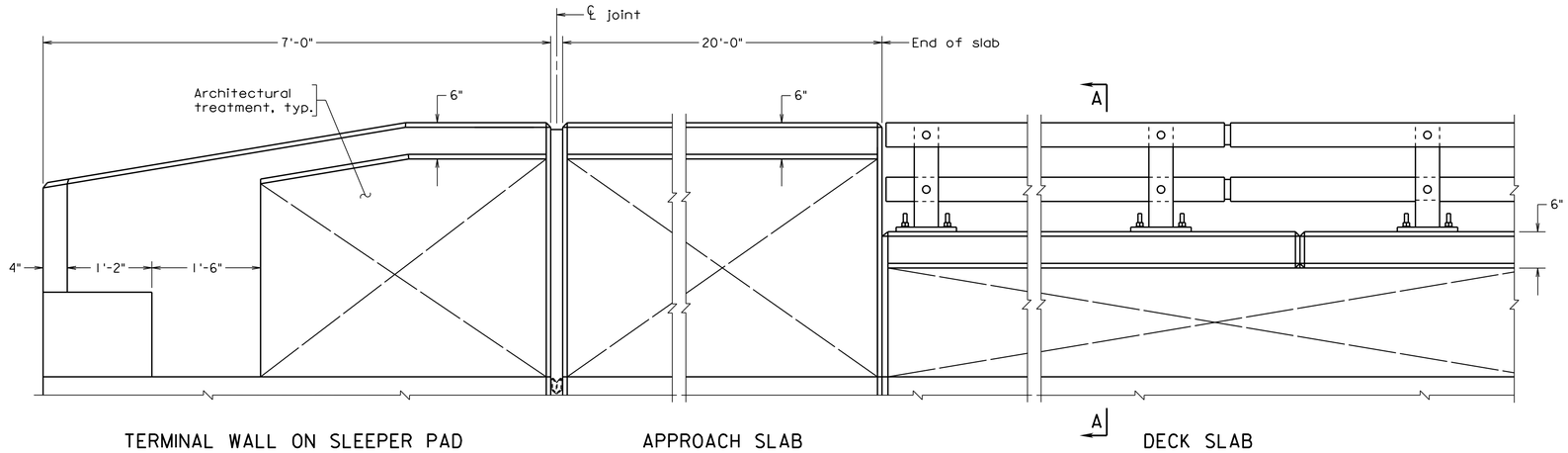

ELEVATION

Notes:

Form liner shall be arranged to produce a continuous rustic brick pattern without obvious repetition of the pattern.

Details shown for a 8'-0" long form liner. Contractor shall submit shop drawings with pattern layout for approval by the Engineer.

Architectural treatment shall be applied on both faces of the barrier.

Width of terminal wall shall be equal to the width of the concrete pedestal of the railing in Section A-A.

Contractor may form a construction joint at a groove location or edge of an architectural treatment form where the form edge is located at least 1'-8" from the nearest post centerline.

For all other dimensions and details not shown, see sheets 28 thru 32.

	Relief (in.)
r1	1"
r2	2"
r3	¾"

* r1 : relief on inside face is limited to 1"
r2 : relief on outside face is limited to 2"

** r = 0" for r2 ≤ 1"
r = 1" for 1" < r2 ≤ 2"

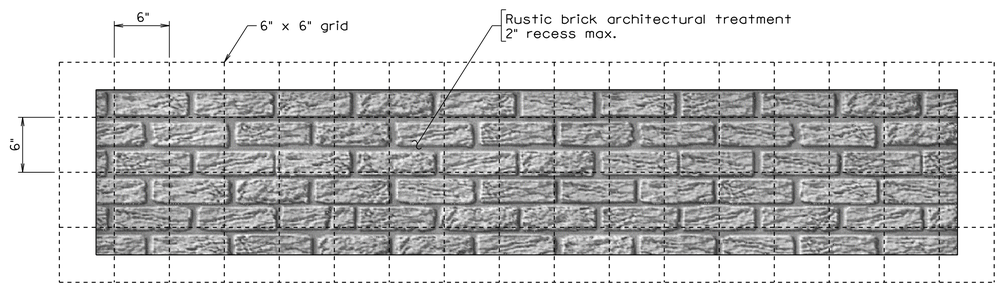

RUSTIC BRICK TEXTURE DETAIL
Parapet - Outside Face
(Inside Face similar)

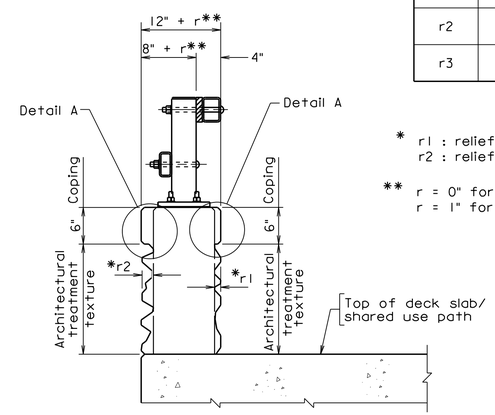

SECTION A-A

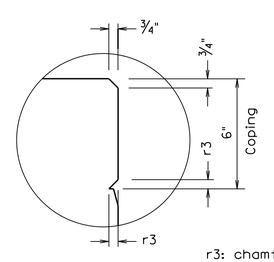

r3: chamfer size, ¾" min.

DETAIL A

PRELIMINARY PLANS
THESE PLANS NOT TO BE USED FOR CONSTRUCTION

Not to scale

033

Dewberry

Dewberry Engineers Inc.
8401 ARLINGTON BLVD.
FAIRFAX, VA 22031
PHONE: 703.849.0100
FAX: 703.849.0518

HARTLAND DRIVE OVER BROAD RUN TRIBUTARY
LOUDOUN COUNTY
CPAP-2020-0009

SEAL

DEWBERRY ENGINEERS INC.
FAIRFAX, VA
STRUCTURAL ENGINEER

No.	DATE	BY	Description

REVISIONS

DESIGNED BY KLM
DRAWN BY KLM
CHECKED BY GJM
DATE APRIL 2020

TITLE

ARCHITECTURAL TREATMENT FOR CPSR RAILING

PROJECT NO. 50113885

XXX-XX

SHEET NO. 33 of 49

Received by VMRC September 1, 2020 /blh

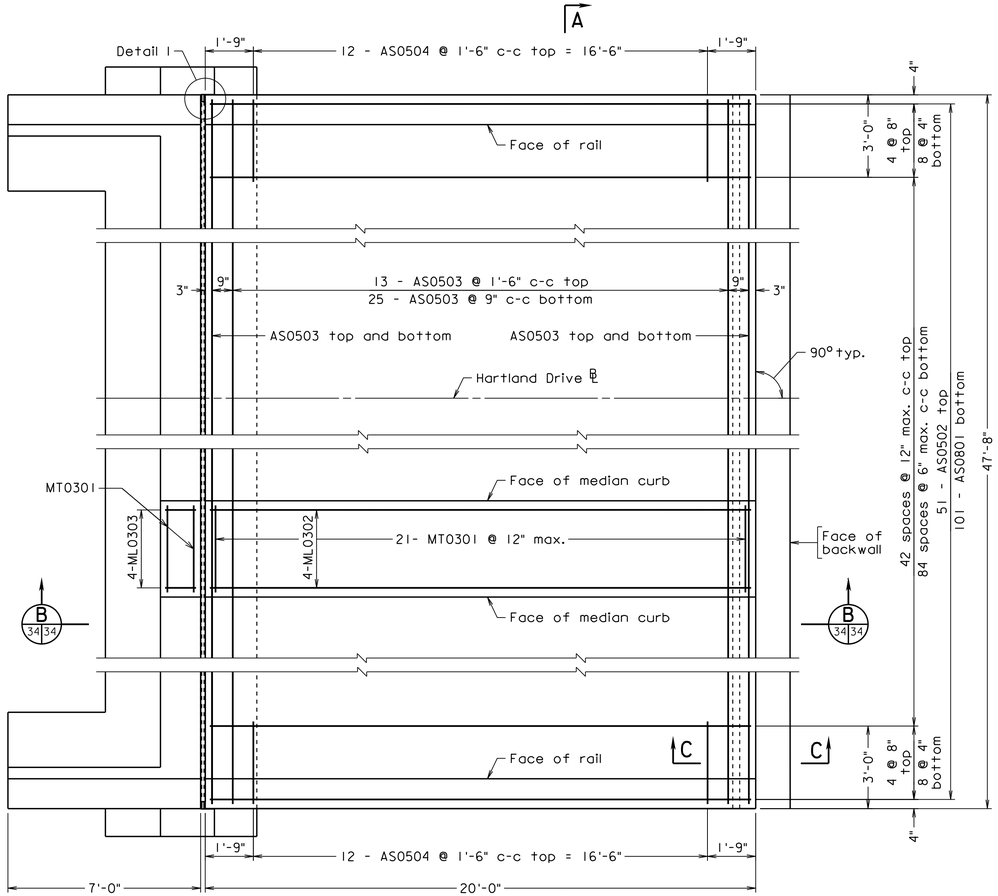

PLAN
Scale: 3/8" = 1'-0"

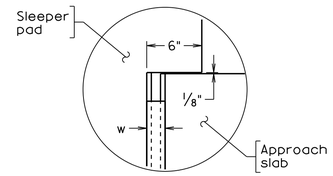

DETAIL 1
Scale: 1 1/2" = 1'-0"

Notes:

All joints that are to be sealed shall be free of cracked and spalled areas and their faces shall be free of all foreign matter, curing compound, oils, greases and dirt. All faces must be sandblasted or brushed with a mechanical rotary wire brush. Just prior to sealing, the joint shall be blown out with oil-free compressed air.

Deformed reinforcing bars shall conform to ASTM A615, Grade 60. All reinforcing bar dimensions except for bending diagram are to centers of bars.

Prime aggregate base material with 0.35 gal. per sq. yd. Liquid Asphalt Material Type RC-70, RC-250 or MC-250 if aggregate base is exposed for more than two weeks.

Grooving shall be in accordance with VDOT Road and Bridge Specifications, Section 404.07 (f), Class 6, Bridge Deck Finish. Payment for grooving is included in bridge deck grooving quantities.

For sleeper pad reinforcement, see sheet 36.

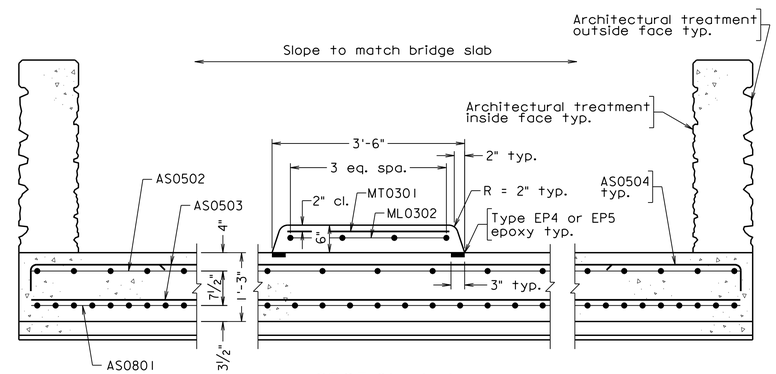

SECTION A-A
Scale: 3/4" = 1'-0"

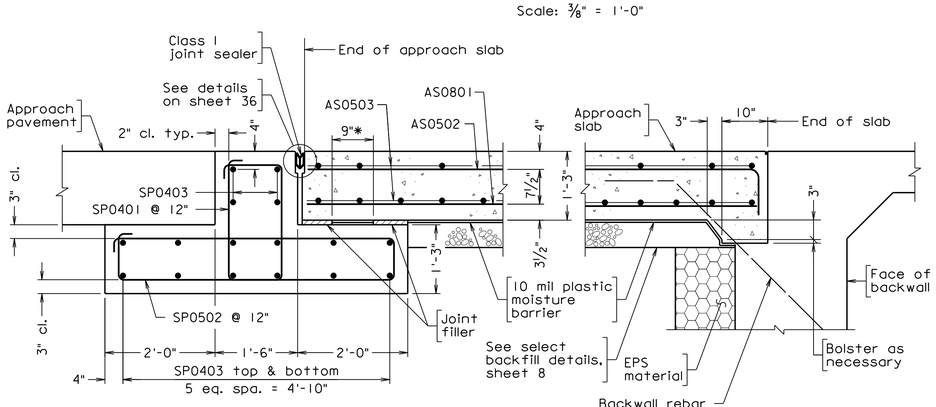

SECTION B 34,36 34
Scale: 3/4" = 1'-0"

* Two 1/8" preformed bedding material pads conforming to Section 237 of VDOT Road and Bridge Specifications, full length of approach slab seat. Between the pads use either a powdered graphite lubricant or Molykote 321 by Dow Corning or Mantek Dri-Guard.

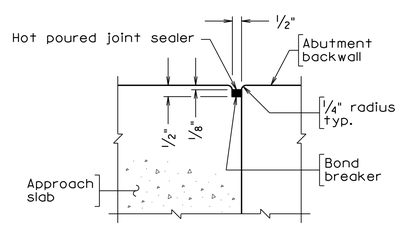

SECTION C-C
Scale: 3" = 1'-0"

REINFORCING STEEL SCHEDULE

Mark	No.	Size	Pin ø	Length	Location
AS0801	101	#8	——	19'-8"	Bottom longitudinal
AS0502	51	#5	——	20'-5"	Top longitudinal
AS0503	84	#5	——	24'-8"	Top and bottom transverse
AS0504	24	#5	3 3/4"	4'-0"	Top transverse at barriers
MT0301	23	#3	——	2'-11"	Median transverse
ML0302	4	#3	——	19'-8"	Median longitudinal approach
ML0303	4	#3	——	1'-2"	Median longitudinal sleeper pad
SP0401	60	#4	2"	6'-8"	Sleeper pad top stirrup
SP0502	50	#5	2 1/2"	12'-3"	Sleeper pad bottom stirrup
SP0403	32	#4	——	25'-6"	Sleeper pad transverse
SP0504	8	#5	——	8'-3"	Sleeper pad bottom stirrup
SP0405	24	#5	——	5'-6"	Sleeper pad longitudinal
SP0406	4	#5	2"	7'-8"	Sleeper pad top stirrup at ends

ESTIMATED QUANTITIES

	Concrete Class A4 Bridge Approach Slab ⊗ CY	Reinforcing Steel Bridge Approach Slab ⊗ LB
Abutment A	45.2	8,710
Sleeper Pad A	17.0	1,640
Total	62.2	10,350

⊗ Denotes items to be paid for on basis of plan quantities in accordance with current Road and Bridge Specifications.

PRELIMINARY PLANS

THESE PLANS NOT TO BE USED FOR CONSTRUCTION

Scale as noted

Dewberry

Dewberry Engineers Inc.
8401 ARLINGTON BLVD.
FAIRFAX, VA 22031
PHONE: 703.849.0100
FAX: 703.849.0518

HARTLAND DRIVE OVER BROAD RUN TRIBUTARY
LOUDOUN COUNTY
CPAP-2020-0009

SEAL

DEWBERRY ENGINEERS INC.
FAIRFAX, VA
STRUCTURAL ENGINEER

No.	DATE	BY	Description

REVISIONS

DESIGNED BY KLM
DRAWN BY KLM
CHECKED BY GJM
DATE APRIL 2020

TITLE

ABUTMENT A APPROACH SLAB

PROJECT NO. 50113885

XXX-XX

SHEET NO. 34 of 49

Received by VMRC September 1, 2020 /blh

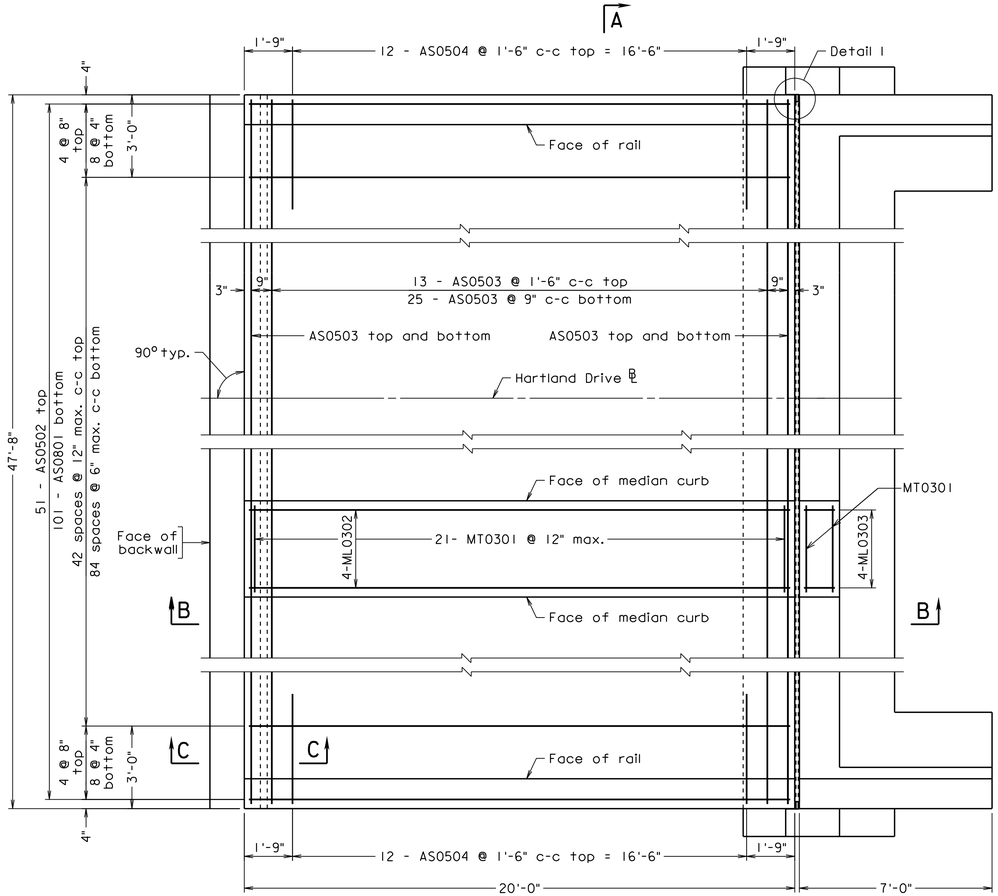

PLAN
Scale: 3/8" = 1'-0"

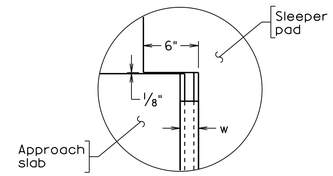

DETAIL 1
Scale: 1 1/2" = 1'-0"

Notes:

All joints that are to be sealed shall be free of cracked and spalled areas and their faces shall be free of all foreign matter, curing compound, oils, greases and dirt. All faces must be sandblasted or brushed with a mechanical rotary wire brush. Just prior to sealing, the joint shall be blown out with oil-free compressed air.

Deformed reinforcing bars shall conform to ASTM A615, Grade 60. All reinforcing bar dimensions except for bending diagram are to centers of bars.

Prime aggregate base material with 0.35 gal. per sq. yd. Liquid Asphalt Material Type RC-70, RC-250 or MC-250 if aggregate base is exposed for more than two weeks.

Grooving shall be in accordance with VDOT Road and Bridge Specifications, Section 404.07 (f), Class 6, Bridge Deck Finish. Payment for grooving is included in bridge deck grooving quantities.

For sleeper pad reinforcement, see sheet 36.

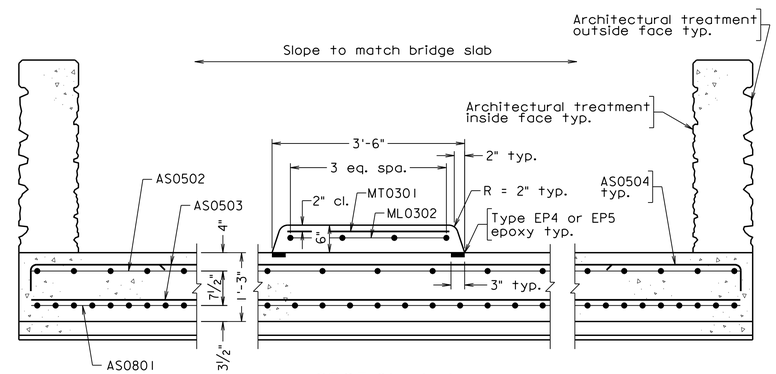

SECTION A-A
Scale: 3/4" = 1'-0"

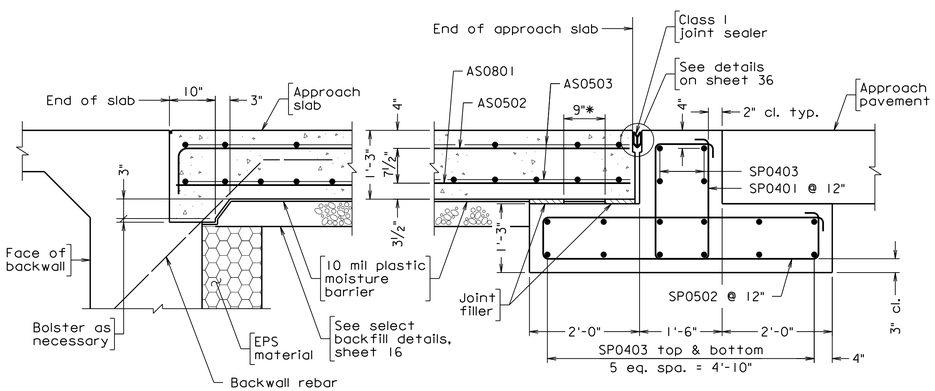

SECTION B-B
Scale: 3/4" = 1'-0"

* Two 1/8" preformed bedding material pads conforming to Section 237 of VDOT Road and Bridge Specifications, full length of approach slab seat. Between the pads use either a powdered graphite lubricant or Molykote 321 by Dow Corning or Mantek Dri-Guard.

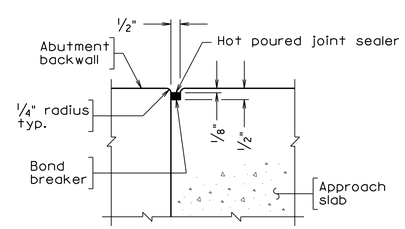

SECTION C-C
Scale: 3" = 1'-0"

REINFORCING STEEL SCHEDULE

Mark	No.	Size	Pin ø	Length	Location
AS0801	101	#8	——	19'-8"	Bottom longitudinal
AS0502	51	#5	——	20'-5"	Top longitudinal
AS0503	84	#5	——	24'-8"	Top and bottom transverse
AS0504	24	#5	3 3/4"	4'-0"	Top transverse at barriers
MT0301	23	#3	——	2'-11"	Median transverse
ML0302	4	#3	——	19'-8"	Median longitudinal approach
ML0303	4	#3	——	1'-2"	Median longitudinal sleeper pad
SP0401	60	#4	2"	6'-8"	Sleeper pad top stirrup
SP0502	50	#5	2 1/2"	12'-3"	Sleeper pad bottom stirrup
SP0403	32	#4	——	25'-6"	Sleeper pad transverse
SP0504	8	#5	——	8'-3"	Sleeper pad bottom stirrup
SP0405	24	#5	——	5'-6"	Sleeper pad longitudinal
SP0406	4	#5	2"	7'-8"	Sleeper pad top stirrup at ends

ESTIMATED QUANTITIES

	Concrete Class A4 Bridge Approach Slab ⊗ CY	Reinforcing Steel Bridge Approach Slab ⊗ LB
Abutment B	45.2	8,710
Sleeper Pad B	17.0	1,640
Total	62.2	10,350

⊗ Denotes items to be paid for on basis of plan quantities in accordance with current Road and Bridge Specifications.

PRELIMINARY PLANS

THESE PLANS NOT TO BE USED FOR CONSTRUCTION

Scale as noted

Dewberry

Dewberry Engineers Inc.
8401 ARLINGTON BLVD.
FAIRFAX, VA 22031
PHONE: 703.849.0100
FAX: 703.849.0518

HARTLAND DRIVE OVER BROAD RUN TRIBUTARY
LOUDOUN COUNTY
CPAP-2020-0009

SEAL

DEWBERRY ENGINEERS INC.
FAIRFAX, VA
STRUCTURAL ENGINEER

No.	DATE	BY	Description

REVISIONS

DESIGNED BY KLM
DRAWN BY KLM
CHECKED BY GJM
DATE APRIL 2020

TITLE

ABUTMENT B APPROACH SLAB

PROJECT NO. 50113885

XXX-XX

Received by VMRC September 1, 2020 /blh

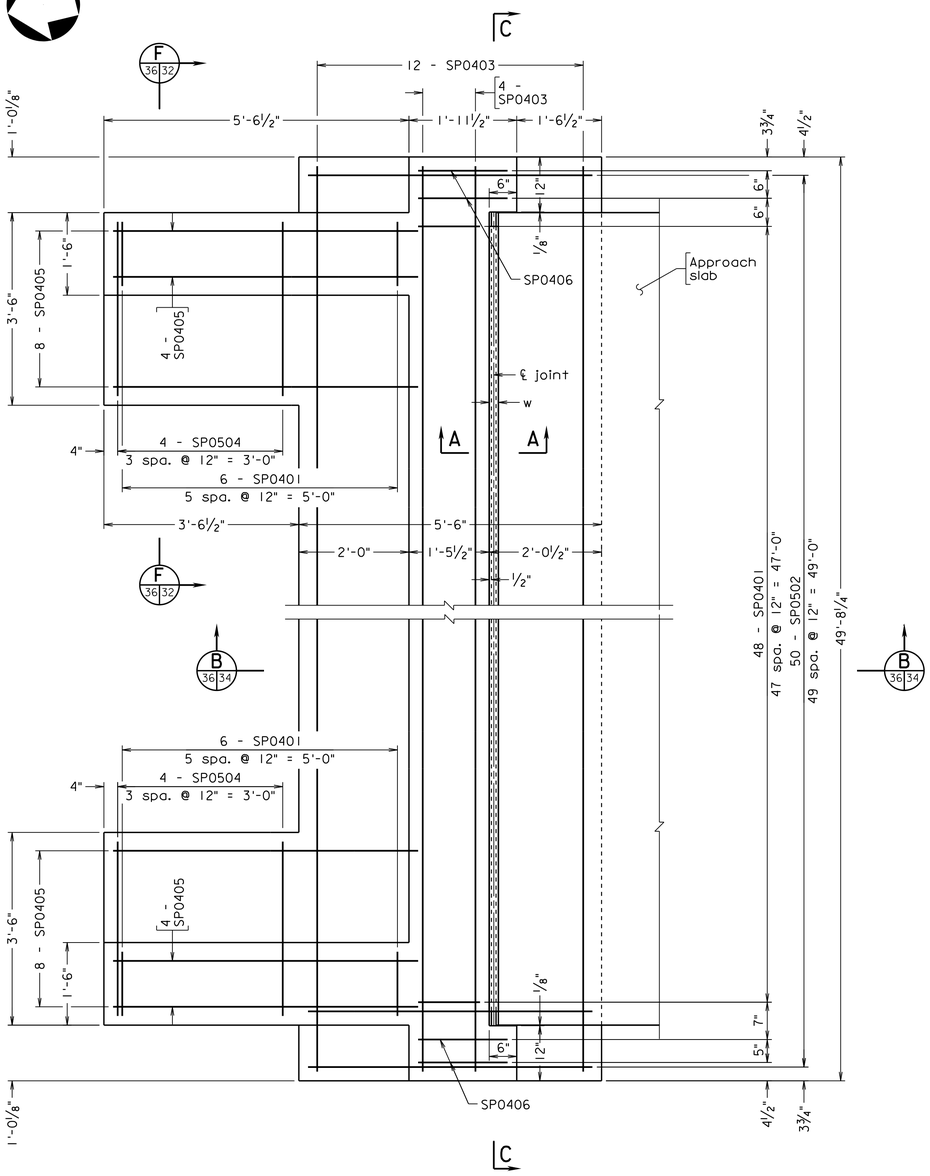

PLAN

Abutment A shown, Abutment B similar
Face of curb not shown for clarity
Scale: ¾" = 1'-0"

Notes:

Sealer shall be installed in one continuous piece except for median and barrier areas.

Joint width 'w' is the final joint width of the cured concrete when placed at 60°F. The width 'w' shall be increased or decreased for every 10°F temperature drop or rise respectively by t.

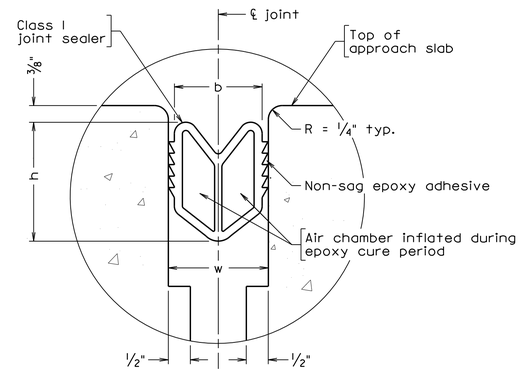

SECTION A-A

Not to scale

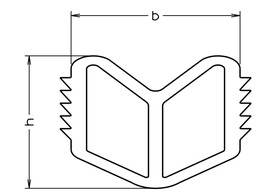

CLASS I JOINT SEALER

In uncompressed state
Not to scale

Abutment	Sealer Size b	Sealer Depth h	Joint Width w	t
A	2½"	3⅜"	2"	3/32 "
B	2½"	3⅜"	2"	3/32 "

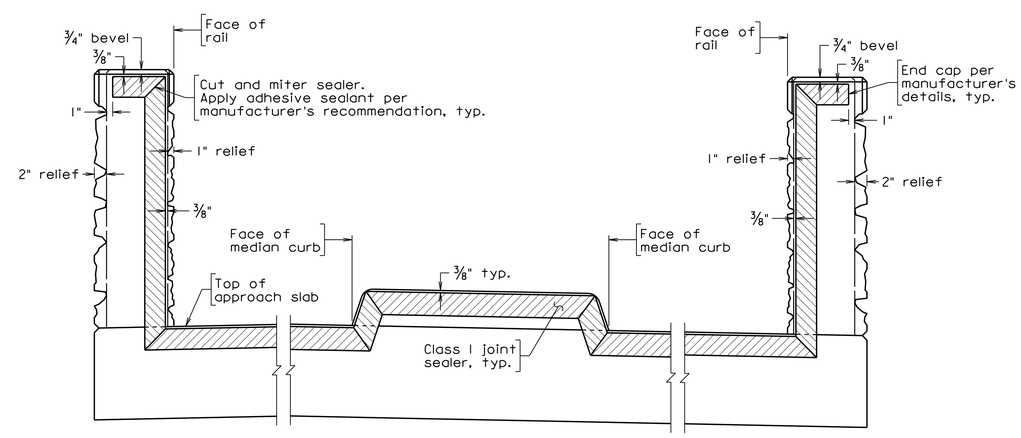

SECTION C-C

PRELIMINARY PLANS

THESE PLANS NOT TO BE USED FOR CONSTRUCTION

Scale: 1" = 1'-0" unless otherwise noted

Dewberry

Dewberry Engineers Inc.
8401 ARLINGTON BLVD.
FAIRFAX, VA 22031
PHONE: 703.849.0100
FAX: 703.849.0518

HARTLAND DRIVE OVER BROAD RUN TRIBUTARY
LOUDOUN COUNTY
CPAP-2020-0009

SEAL

DEWBERRY ENGINEERS INC.
FAIRFAX, VA
STRUCTURAL ENGINEER

No.	DATE	BY	Description

REVISIONS

DESIGNED BY KLM
DRAWN BY KLM
CHECKED BY GJM
DATE APRIL 2020

TITLE

SLEEPER PAD AND JOINT DETAILS

PROJECT NO. 50113885

XXX-XX

SHEET NO. 36 of 49

Received by VMRC September 1, 2020 /blh

www.geotechnical-solutions.com

PROJECT: Hartland Drive Bridges — PROJECT NO.: GP-192603-A
CLIENT: Timber Ridge at Hartland, LLC — BORING NO.: SB-1
PROJECT LOCATION: Loudoun County, VA
LOCATION: South Bridge - North Abutment — ELEVATION: 298.78 ft. MSL
DRILLER: Recon Drilling, Inc. (C. Gudiel) — LOGGED BY: J. Kline
DRILLING METHOD: 3.25" I.D. HSA w/Autohammer & NQ Core Bit — DATE: 11/07/2019
DEPTH TO - WATER> INITIAL: ▽ 3 ft. AFTER 24 HOURS: ▼ 3 ft. CAVING> ⊥ 4.5
GRID COORDINATES: N 7035998.29 E 11745856.45

① This information pertains only to this boring and should not be interpreted as being indicative of the site.

Depth/Elevation (feet)	Graphic	Description	USCS Class.	Sample No.	Blow Counts	Recovery (in.)	Moisture Content (%)	Liquid Limit	Plasticity Index	%#200	PI — LL; Water Content - ⊗; Penetration - ● (10 20 30 40 50)
0 / 297		3 inches of TOPSOIL	TOPS.								
		0.25 Alluvium - Brown CLAYEY SAND WITH GRAVEL, loose, moist	CL	S1	1 2 3	21	24.7				
3 / 294		Residual - Red-brown SANDY LEAN CLAY, contains siltstone fragments, medium stiff, moist	CL	S2	2 3 9	20	20.8	29	9	47.1	
				S3	12 31 50/2"	10	10.5				31/8"
		5.0 IGM - Highly weathered, moderately hard, medium bedded red-brown SILTSTONE	IGM	S4	50/5"	1	3.9				50/5"
6 / 291				S5	50/2"	2	4.3				50/2"
9 / 288				S6	50/2"	2	5.5				50/2"
12 / 285											
15 / 282											
18 / 279		18.0 Slightly weathered, moderately hard, thin-bedded reddish brown argillaceous indurated and interbedded	ROCK	S7	50/0"	NR					50/0"

Boring backfilled after 24 hour water level observation.

Figure PAGE 1 of 3

② This information pertains only to this boring and should not be interpreted as being indicative of the site.

Depth/Elevation (feet)	Graphic	Description	USCS Class.	Sample No.	Blow Counts	Recovery (in.)	Moisture Content (%)	Liquid Limit	Plasticity Index	%#200	PI — LL; Water Content - ⊗; Penetration - ● (10 20 30 40 50)
21 / 276		SILTSTONE and SANDSTONE, highly to intensely fractured, slightly rough, with <0.2 in. separation, hard wall rock, continuous at moderate to high angle, highly to intensely jointed, slightly rough with <0.2 in. separation, hard wall rock, continuous at low to moderate angle Mud seam from 20.1 to 20.8 feet Core Run Length - 5 feet Recovery = 84.2% RQD = 84.2 = Good Quality		R1		51					
24 / 273		Slightly weathered, moderately hard, thin-bedded reddish brown argillaceous indurated, interbedded and vuggy SILTSTONE and SANDSTONE, moderately to highly fractured, slightly rough, with <0.05 in. separation, hard wall rock, continuous at moderate to high angle, moderately to highly jointed, slightly rough with no separation, hard wall rock, continuous at low to moderate angle Core Run Length - 5 feet Recovery = 100.0% RQD = 90.6 = Excellent Quality		R2		60					
27 / 270				R3		60					
30 / 267											
33 / 264		Slightly weathered, moderately hard, thin-bedded reddish brown argillaceous indurated, cross-bedded and interbedded SILTSTONE and SANDSTONE, moderately to intensely fractured, slightly rough, with <0.2 in. separation, hard wall rock, continuous at moderate to high angle, moderately to intensely jointed, slightly rough with <0.2 in. separation, hard wall		R4		60					
36 / 261											
39											

Boring backfilled after 24 hour water level observation.

Figure PAGE 2 of 3

This information pertains only to this boring and should not be interpreted as being indicative of the site.

Depth/Elevation (feet)	Graphic	Description	USCS Class.	Sample No.	Blow Counts	Recovery (in.)	Moisture Content (%)	Liquid Limit	Plasticity Index	%#200	PI — LL; Water Content - ⊗; Penetration - ● (10 20 30 40 50)
42 / 258		rock, continuous at low to moderate angle Core Run Length - 5 feet Recovery = 100.0% RQD = 92.3 = Excellent Quality									
45 / 255		Slightly weathered, moderately hard, thin-bedded reddish brown argillaceous indurated, cross-bedded and interbedded SILTSTONE and SANDSTONE, moderately to intensely fractured, slightly rough, with <0.2 in. separation, hard wall rock, continuous at moderate to high angle, moderately to intensely jointed, slightly rough with <0.2 in. separation, hard wall rock, continuous at low to moderate angle Core Run Length - 5 feet Recovery = 100.0% RQD = 89.8 = Good Quality									
48 / 252											
51 / 249		Auger refusal at 18 feet. Rock core terminated at 33 feet.									
54 / 246											
57 / 243											
60 / 240											

Boring backfilled after 24 hour water level observation.

Figure PAGE 3 of 3

The subsurface information shown on the boring logs in these plans was obtained with reasonable care and recorded in good faith solely for use by the Department in establishing design controls for the project. The Department has no reason to suspect that such information is not reasonably accurate as an approximate indication of the subsurface conditions at the sites where the borings were taken. The Department does not in any way warrant or guarantee that such data can be projected as indicative of conditions beyond the limits of the borings shown; and any such projections by bidders are purely interpretive and altogether speculative. Further, the Department does not in any way guarantee, either expressly or by implication, the sufficiency of the information for bid purposes.

The boring logs are made available to bidders in order that they may have access to subsurface data identical to that which is possessed by the Department, and are not intended as a substitute for personal investigation, interpretation and judgment by the bidders.

① Abutment A bottom of footing elevation, 296.50

② Abutment A estimated pile tip elevation, 277.50

PRELIMINARY PLANS

THESE PLANS NOT TO BE USED FOR CONSTRUCTION

Dewberry

Dewberry Engineers Inc.
8401 ARLINGTON BLVD.
FAIRFAX, VA 22031
PHONE: 703.849.0100
FAX: 703.849.0518

HARTLAND DRIVE OVER BROAD RUN TRIBUTARY
LOUDOUN COUNTY
CPAP-2020-0009

SEAL

A copy of the original signed geotechnical submittal is on file in the District Office.

No.	DATE	BY	Description

REVISIONS

DESIGNED BY TPV
DRAWN BY JPD
CHECKED BY PCA
DATE APRIL 2020

TITLE

ENGINEERING GEOLOGY - 1

PROJECT NO. 50113885

XXX-XX

SHEET NO. 37 of 49

Received by VMRC September 1, 2020 /blh

PROJECT: Hartland Drive Bridges — PROJECT NO.: GP-192603-A
CLIENT: Timber Ridge at Hartland, LLC — BORING NO.: SB-2
PROJECT LOCATION: Loudoun County, VA
LOCATION: South Bridge - North Abutment — ELEVATION: 299.47 ft. MSL
DRILLER: Recon Drilling, Inc. (C. Gudiel) — LOGGED BY: J. Kline
DRILLING METHOD: 3.25" I.D. HSA w/Autohammer & NQ Core Bit — DATE: 11/08/2019
DEPTH TO - WATER> INITIAL: ▽ 10 ft. AFTER 24 HOURS: ▽ 10 ft. CAVING> ⊏ 12
GRID COORDINATES: N 7036009.31 E 11745812.39

www.geotechnical-solutions.com

This information pertains only to this boring and should not be interpreted as being indicative of the site.

①

Depth/Elevation (Feet)	Graphic	Description	USCS Class.	Sample No.	Blow Counts	Recovery (in.)	Moisture Content (%)	Liquid Limit	Plasticity Index	%#200	PI — LL; Water Content - ⊗; Penetration - ● (10 20 30 40 50)
0		3 inches of TOPSOIL	TOPS								
0.25		Alluvium - Brown SANDY LEAN CLAY, soft moist,	CL	BU1			27.2	40	19	71.9	
				S1	2 2 2 2	24	23.3				5
297 3		Residual - Red-brown SANDY LEAN CLAY, contains siltstone fragments, medium stiff, moist	CL	S2	2 7 14 19	24	11.4				21
5.0		IGM - Highly weathered, moderately hard, medium bedded red-brown SILTSTONE	IGM	S3	9 18 30 50	24	8.8				48
294 6				S4	50/2"	1	3.8				50/2"
291 9				S5	50/1"	1	4.0				50/1"
288 12											
13.6		Slightly weathered, moderately hard, thin-bedded reddish brown argillaceous indurated and interbedded SILTSTONE and SANDSTONE, highly fractured, slightly rough, with <0.05 in. separation, hard wall rock, continuous at moderate to high angle, moderately to highly jointed, slightly rough with <0.2 in. separation, hard wall rock, continuous at low to moderate angle Core Run Length - 5 feet	ROCK	S6	50/1"	NR					50/1"
285 15				R1		50					
282 18											

Boring backfilled after 24 hour water level observation.

Figure PAGE 1 of 3

②

Depth/Elevation (Feet)	Graphic	Description	USCS Class.	Sample No.	Blow Counts	Recovery (in.)	Moisture Content (%)	Liquid Limit	Plasticity Index	%#200	PI — LL; Water Content - ⊗; Penetration - ● (10 20 30 40 50)
279 21		Recovery = 83.3% RQD = 62.5 = Fair Quality Slightly weathered, moderately hard, thin-bedded reddish brown argillaceous indurated and interbedded SILTSTONE and SANDSTONE, moderately to highly fractured, slightly rough, with <0.05 in. separation, hard wall rock, continuous at moderate to high angle, moderately to highly jointed, slightly rough with <0.2 in. separation, hard wall rock, continuous at low to moderate angle Core Run Length - 5 feet Recovery = 100.0% RQD = 90.0 = Excellent Quality		R2		60					
276 24											
273 27				R3		58					
270 30		Slightly weathered, moderately hard, thin-bedded reddish brown argillaceous indurated and interbedded SILTSTONE and SANDSTONE, moderately fractured, slightly rough, with no separation, hard wall rock, continuous at moderate to high angle, moderately jointed, slightly rough with no separation, hard wall rock, continuous at low to moderate angle Core Run Length - 5 feet Recovery = 96.7% RQD = 96.5 = Excellent Quality		R4		60					
267 33											
264 36		Slightly weathered, moderately hard, thin-bedded reddish brown argillaceous indurated and interbedded SILTSTONE and SANDSTONE, moderately fractured, slightly rough, with no separation, hard wall rock, continuous at moderate to high									
261 39											

Boring backfilled after 24 hour water level observation.

Figure PAGE 2 of 3

Depth/Elevation (Feet)	Graphic	Description	USCS Class.	Sample No.	Blow Counts	Recovery (in.)	Moisture Content (%)	Liquid Limit	Plasticity Index	%#200	PI — LL; Water Content - ⊗; Penetration - ● (10 20 30 40 50)
258 42		angle, moderately jointed, slightly rough with no separation, hard wall rock, continuous at low to moderate angle Core Run Length - 5 feet Recovery = 100.0% RQD = 100.0 = Excellent Quality									
255 45		Auger refusal at 13.6 feet. Rock core terminated at 33.6 feet.									
252 48											
249 51											
246 54											
243 57											
240 60											

Boring backfilled after 24 hour water level observation.

Figure PAGE 3 of 3

038

The subsurface information shown on the boring logs in these plans was obtained with reasonable care and recorded in good faith solely for use by the Department in establishing design controls for the project. The Department has no reason to suspect that such information is not reasonably accurate as an approximate indication of the subsurface conditions at the sites where the borings were taken. The Department does not in any way warrant or guarantee that such data can be projected as indicative of conditions beyond the limits of the borings shown; and any such projections by bidders are purely interpretive and altogether speculative. Further, the Department does not in any way guarantee, either expressly or by implication, the sufficiency of the information for bid purposes.

The boring logs are made available to bidders in order that they may have access to subsurface data identical to that which is possessed by the Department, and are not intended as a substitute for personal investigation, interpretation and judgment by the bidders.

① Abutment A bottom of footing elevation, 296.50

② Abutment A estimated pile tip elevation, 277.50

PRELIMINARY PLANS

THESE PLANS NOT TO BE USED FOR CONSTRUCTION

Dewberry

Dewberry Engineers Inc.
8401 ARLINGTON BLVD.
FAIRFAX, VA 22031
PHONE: 703.849.0100
FAX: 703.849.0518

HARTLAND DRIVE OVER BROAD RUN TRIBUTARY
LOUDOUN COUNTY
CPAP-2020-0009

SEAL

A copy of the original signed geotechnical submittal is on file in the District Office.

No.	DATE	BY	Description

REVISIONS

DESIGNED BY TPV
DRAWN BY JPD
CHECKED BY PCA
DATE APRIL 2020

TITLE

ENGINEERING GEOLOGY - 2

PROJECT NO. 50113885

XXX-XX

SHEET NO. 38 of 49

Received by VMRC September 1, 2020 /blh

PROJECT: Hartland Drive Bridges — PROJECT NO.: GP-192603-A
CLIENT: Timber Ridge at Hartland, LLC — BORING NO.: SB-3
PROJECT LOCATION: Loudoun County, VA
LOCATION: South Bridge - South Abutment — ELEVATION: 298.73 ft. MSL
DRILLER: Recon Drilling, Inc. (C. Gudiel) — LOGGED BY: J. Kline
DRILLING METHOD: 3.25" I.D. HSA w/Autohammer & NQ Core Bit — DATE: 11/11/2019
DEPTH TO - WATER> INITIAL: ▽ 5 ft. AFTER 24 HOURS: ▼ 6 ft. CAVING> ℄ 13
GRID COORDINATES: N 7035906.92 E 11745787.42

www.geotechnical-solutions.com

This information pertains only to this boring and should not be interpreted as being indicative of the site.

Depth/Elevation (Feet)	Graphic	Description	USCS Class.	Sample No.	Blow Counts	Recovery (in.)	Moisture Content (%)	Liquid Limit	Plasticity Index	%#200
0 / 297		2 inches of TOPSOIL (0.16)	TOPS	Bulk						
		Alluvium - Brown SANDY LEAN CLAY, soft moist,	CL	S1	2 2 2	20	15.4 28.8	32	13	86.0
3 / 294		Residual - Red-brown SANDY LEAN CLAY, contains siltstone fragments, medium stiff, moist	CL	S2	3 4 5	24	21.9	36	19	70.7
				S3	3 3 4 5	24	23.3			
6 / 291		IGM - Highly weathered, moderately hard, medium bedded red-brown SILTSTONE (6.5)	IGM	S4	18 50/5"	11	9.9			
				S5	50/2"	1	3.8			
9 / 288										
12 / 285				S6	50/2"	1	4.2			
		Slightly weathered, moderately hard, thin-bedded reddish brown argillaceous indurated, cross-bedded and interbedded SILTSTONE and SANDSTONE, moderately to highly fractured, slightly rough, with no separation, hard wall rock, continuous at moderate to high angle, moderately to highly jointed, slightly rough with no separation, hard wall rock, continuous at low to moderate (13.7)	ROCK	R1		60				
15 / 282										
18 / 279										

Water Content - ⊗ Penetration - ● (PI — LL; 10 20 30 40 50)

Boring backfilled after 24 hour water level observation.

Figure PAGE 1 of 3

Depth/Elevation (Feet)	Graphic	Description	USCS Class.	Sample No.	Blow Counts	Recovery (in.)	Moisture Content (%)	Liquid Limit	Plasticity Index	%#200
21 / 276		angle Core Run Length - 5 feet Recovery = 100.0% RQD = 93.1 = Excellent Quality Slightly weathered, moderately hard, thin-bedded reddish brown argillaceous indurated, cross-bedded and interbedded SILTSTONE and SANDSTONE, moderately to highly fractured, slightly rough, with no separation, hard wall rock, continuous at moderate to high angle, moderately to highly jointed, slightly rough with <0.2 in. separation, hard wall rock, continuous at low to moderate angle Core Run Length - 5 feet Recovery = 100.0% RQD = 95.8 = Excellent Quality Slightly weathered, moderately hard, thin-bedded reddish brown argillaceous indurated, cross-bedded and interbedded SILTSTONE and SANDSTONE, moderately to highly fractured, slightly rough, with no separation, hard wall rock, continuous at moderate to high angle, moderately to highly jointed, slightly rough with no separation, hard wall rock, continuous at low to moderate angle Core Run Length - 5 feet Recovery = 100.0% RQD = 100.0 = Excellent Quality Slightly weathered, moderately hard, thin-bedded reddish brown argillaceous indurated, cross-bedded and interbedded SILTSTONE and		R2		60				
24 / 273										
27 / 270				R3		60				
30 / 267										
33 / 264				R4		60				
36 / 261										
39										

Water Content - ⊗ Penetration - ● (PI — LL; 10 20 30 40 50)

Boring backfilled after 24 hour water level observation.

Figure PAGE 2 of 3

Depth/Elevation (Feet)	Graphic	Description	USCS Class.	Sample No.	Blow Counts	Recovery (in.)	Moisture Content (%)	Liquid Limit	Plasticity Index	%#200
42 / 258		SANDSTONE, moderately to highly fractured, slightly rough, with <0.2 in. separation, hard wall rock, continuous at moderate to high angle, moderately to highly jointed, slightly rough with no separation, hard wall rock, continuous at low to moderate angle Core Run Length - 5 feet Recovery = 100.0% RQD = 100.0 = Excellent Quality Auger refusal at 13.7 feet. Rock core terminated at 33.7 feet.								
45 / 255										
48 / 252										
51 / 249										
54 / 246										
57 / 243										
60 / 240										

Water Content - ⊗ Penetration - ● (PI — LL; 10 20 30 40 50)

Boring backfilled after 24 hour water level observation.

Figure PAGE 3 of 3

039

The subsurface information shown on the boring logs in these plans was obtained with reasonable care and recorded in good faith solely for use by the Department in establishing design controls for the project. The Department has no reason to suspect that such information is not reasonably accurate as an approximate indication of the subsurface conditions at the sites where the borings were taken. The Department does not in any way warrant or guarantee that such data can be projected as indicative of conditions beyond the limits of the borings shown; and any such projections by bidders are purely interpretive and altogether speculative. Further, the Department does not in any way guarantee, either expressly or by implication, the sufficiency of the information for bid purposes.

The boring logs are made available to bidders in order that they may have access to subsurface data identical to that which is possessed by the Department, and are not intended as a substitute for personal investigation, interpretation and judgment by the bidders.

① Abutment B bottom of footing elevation, 296.50

② Abutment B estimated pile tip elevation, 282.00

PRELIMINARY PLANS

THESE PLANS NOT TO BE USED FOR CONSTRUCTION

Dewberry

Dewberry Engineers Inc.
8401 ARLINGTON BLVD.
FAIRFAX, VA 22031
PHONE: 703.849.0100
FAX: 703.849.0518

HARTLAND DRIVE OVER BROAD RUN TRIBUTARY
LOUDOUN COUNTY
CPAP-2020-0009

SEAL

A copy of the original signed geotechnical submittal is on file in the District Office.

No.	DATE	BY	Description

REVISIONS

DESIGNED BY TPV
DRAWN BY JPD
CHECKED BY PCA
DATE APRIL 2020

TITLE

ENGINEERING GEOLOGY - 3

PROJECT NO. 50113885

XXX-XX

SHEET NO. 39 of 49

Received by VMRC September 1, 2020 /blh

www.geotechnical-solutions.com

PROJECT: Hartland Drive Bridges — PROJECT NO.: GP-192603-A
CLIENT: Timber Ridge at Hartland, LLC — BORING NO.: SB-4
PROJECT LOCATION: Loudoun County, VA
LOCATION: South Bridge - Upstream Stream Channel — ELEVATION: 298.81 ft.
DRILLER: Recon Drilling, Inc. (C. Gudiel) — LOGGED BY: J. Kline
DRILLING METHOD: 3.25" I.D. HSA w/Autohammer & NQ Core Bit — DATE: 11/11/2019
DEPTH TO - WATER> INITIAL: ▽ 0 ft. AFTER 24 HOURS: ▼ 0 ft. CAVING> ⊥ 3
GRID COORDINATES: N 7035956.47 E 11745804.29

This information pertains only to this boring and should not be interpreted as being indicitive of the site.

Depth/Elevation (Feet)	Graphic	Description	USCS Class.	Sample No.	Blow Counts	Recovery (in.)	Moisture Content (%)	Liquid Limit	Plasticity Index	%#200
0 / 297		Alluvium - Brown SANDY LEAN CLAY, very soft, moist	CL	S1	3 2 3	24	20.5			
				Bulk		48	22.1	32	15	64.6
3				S2	10 14 23 50/3"	21	12.0			
3.5		IGM - Highly weathered, moderately hard, medium bedded red-brown SILTSTONE	IGM							
4.0		Slightly weathered, moderately hard, thin-bedded reddish brown argillaceous indurated, cross-bedded and interbedded SILTSTONE and SANDSTONE, highly to intensely fractured, slightly rough, with <0.05 in. separation, hard wall rock, continuous at moderate to high angle, highly to intensely jointed, slightly rough with no separation, hard wall rock, continuous at low to moderate angle	ROCK							
6 / 294				R1		60				
9 / 291										
12 / 288		Core Run Length - 5 feet Recovery = 98.3% RQD = 62.3 = Fair Quality		R2		60				
15 / 285		Slightly weathered, moderately hard, thin-bedded reddish brown argillaceous and indurated SILTSTONE, moderately to highly fractured, slightly rough, with <0.05 in. separation, hard wall rock, continuous at moderate to high angle, highly to intensely jointed, slightly rough with <0.2 in. separation, hard wall rock, continuous at low to moderate angle								
18 / 282		Core Run Length - 5 feet Recovery = 98.3% RQD = 72.3 = Fair								
21 / 279										

Water Content - ⊗ Penetration - ●

Boring backfilled after 24 hour water level observation.

Figure PAGE 1 of 2

www.geotechnical-solutions.com

PROJECT: Hartland Drive Bridges — PROJECT NO.: GP-192603-A
CLIENT: Timber Ridge at Hartland, LLC — BORING NO.: SB-4
PROJECT LOCATION: Loudoun County, VA
LOCATION: South Bridge - Upstream Stream Channel — ELEVATION: 298.81 ft.
DRILLER: Recon Drilling, Inc. (C. Gudiel) — LOGGED BY: J. Kline
DRILLING METHOD: 3.25" I.D. HSA w/Autohammer & NQ Core Bit — DATE: 11/11/2019
DEPTH TO - WATER> INITIAL: ▽ 0 ft. AFTER 24 HOURS: ▼ 0 ft. CAVING> ⊥ 3
GRID COORDINATES: N 7035956.47 E 11745804.29

This information pertains only to this boring and should not be interpreted as being indicitive of the site.

Depth/Elevation (Feet)	Graphic	Description	USCS Class.	Sample No.	Blow Counts	Recovery (in.)	Moisture Content (%)	Liquid Limit	Plasticity Index	%#200
21 / 276		Quality Auger refusal at 4 feet. Rock core terminated at 14 feet.								
24 / 273										
27 / 270										
30 / 267										
33 / 264										
36 / 261										
39										

Water Content - ⊗ Penetration - ●

Boring backfilled after 24 hour water level observation.

Figure PAGE 2 of 2

040

The subsurface information shown on the boring logs in these plans was obtained with reasonable care and recorded in good faith solely for use by the Department in establishing design controls for the project. The Department has no reason to suspect that such information is not reasonably accurate as an approximate indication of the subsurface conditions at the sites where the borings were taken. The Department does not in any way warrant or guarantee that such data can be projected as indicative of conditions beyond the limits of the borings shown; and any such projections by bidders are purely interpretive and altogether speculative. Further, the Department does not in any way guarantee, either expressly or by implication, the sufficiency of the information for bid purposes.

The boring logs are made available to bidders in order that they may have access to subsurface data identical to that which is possessed by the Department, and are not intended as a substitute for personal investigation, interpretation and judgment by the bidders.

PRELIMINARY PLANS

THESE PLANS NOT TO BE USED FOR CONSTRUCTION

Dewberry

Dewberry Engineers Inc.
8401 ARLINGTON BLVD.
FAIRFAX, VA 22031
PHONE: 703.849.0100
FAX: 703.849.0518

HARTLAND DRIVE OVER BROAD RUN TRIBUTARY
LOUDOUN COUNTY
CPAP-2020-0009

SEAL

A copy of the original signed geotechnical submittal is on file in the District Office.

No.	DATE	BY	Description

REVISIONS

DESIGNED BY TPV
DRAWN BY JPD
CHECKED BY PCA
DATE APRIL 2020

TITLE

ENGINEERING GEOLOGY - 4

PROJECT NO. 50113885

XXX-XX

SHEET NO. 40 of 49

Received by VMRC September 1, 2020 /blh

www.geotechnical-solutions.com

PROJECT: Hartland Drive Bridges — PROJECT NO.: GP-192603
CLIENT: Timber Ridge at Hartland, LLC — BORING NO.: BR-4
PROJECT LOCATION: Loudoun County, Virginia
LOCATION: Hartland Drive Station 87+80, CL — ELEVATION: 303.66 ft. MSL
DRILLER: Recon Drilling, Inc. (A. Espinoza) — LOGGED BY: J. Kline
DRILLING METHOD: 3.25" I.D. HSA w/Autohammer & NQ Core Bit (CME 550 — DATE: 05/15/2019
DEPTH TO WATER> INITIAL: ∇ 4 ft. AFTER 24 HOURS: ∇ 4 ft. CAVING> ℄ 18 ft.

This information pertains only to this boring and should not be interpreted as being indicative of the site.

Depth/Elevation (Feet)	Description	USCS Class.	Sample No.	Blow Counts	Recovery (in.)	Moisture Content (%)	Liquid Limit	Plasticity Index	%#200
0 / 303	3 inches of TOPSOIL (0.25)	TOPS							
	Brown, moist, soft to medium stiff sandy Lean CLAY	CL	S1	4 4 6 8	14	13.8			
3 / 300			S2	3 2 2 2	18	19.2			
	Reddish brown, moist, very hard Weathered ROCK (Siltstone) (4.0)	IGM	S3	50/6"	3	14.3			
6 / 297			S4	50/1"	1	3.1			
			S5	50/1"	1	8.4			
9 / 294									
12 / 291			S6	41 50/1"	7	9.5			
15 / 288									
18 / 285			S7	50/1"	1	3.3			

Graphic: 3 inches of TOPSOIL; Brown, moist, soft to medium stiff sandy Lean CLAY; Reddish brown, moist, very hard Weathered ROCK (Siltstone)

Water Content - ⊗ (PI – LL)
Penetration - ● (10 20 30 40 50)

Boring backfilled after 24-hour water observations.

PAGE 1 of 3

www.geotechnical-solutions.com

PROJECT: Hartland Drive Bridges — PROJECT NO.: GP-192603
CLIENT: Timber Ridge at Hartland, LLC — BORING NO.: BR-4
PROJECT LOCATION: Loudoun County, Virginia
LOCATION: Hartland Drive Station 87+80, CL — ELEVATION: 303.66 ft. MSL
DRILLER: Recon Drilling, Inc. (A. Espinoza) — LOGGED BY: J. Kline
DRILLING METHOD: 3.25" I.D. HSA w/Autohammer & NQ Core Bit (CME 550 — DATE: 05/15/2019
DEPTH TO WATER> INITIAL: ∇ 4 ft. AFTER 24 HOURS: ∇ 4 ft. CAVING> ℄ 18 ft.

This information pertains only to this boring and should not be interpreted as being indicative of the site.

Depth/Elevation (Feet)	Description	USCS Class.	Sample No.	Blow Counts	Recovery (in.)	Moisture Content (%)	Liquid Limit	Plasticity Index	%#200
21 / 282									
24 / 279			S8	50/1"	1	9.1			
27 / 276									
28.5	Slightly weathered, moderately hard, thin-bedded reddish brown indurated and argillaceous, SILTSTONE, highly to moderately fractured, slightly rough, with <0.2 in. separation, partially calcite-filled, hard wall rock, continuous at low angle, Core Run Length - 5 feet Recovery - 100% RQD = 97.1 = Excellent Quality	ROCK	S9	50/0"	NR				
30 / 273			R1		60				
33 / 270	Slightly weathered, moderately hard, thin-bedded reddish brown indurated, argillaceous, SILTSTONE, highly to moderately fractured, slightly rough, with <0.2 in. separation, partially calcite-filled, hard wall rock, continuous at low angle, Core Run Length - 5 feet Recovery - 100% RQD = 96.7 = Excellent Quality		R2		60				
36 / 267									
39 / 264	Slightly weathered, moderately hard, thin-bedded reddish		R3		60				

Graphic: Slightly weathered, moderately hard, thin-bedded reddish brown indurated and argillaceous, SILTSTONE, highly to moderately fractured, slightly rough, with <0.2 in. separation, partially calcite-filled, hard wall rock, continuous at low angle, Core Run Length - 5 feet Recovery - 100% RQD = 97.1 = Excellent Quality; Slightly weathered, moderately hard, thin-bedded reddish brown indurated, argillaceous, SILTSTONE, highly to moderately fractured, slightly rough, with <0.2 in. separation, partially calcite-filled, hard wall rock, continuous at low angle, Core Run Length - 5 feet Recovery - 100% RQD = 96.7 = Excellent Quality; Slightly weathered, moderately hard, thin-bedded reddish

Water Content - ⊗ (PI – LL)
Penetration - ● (10 20 30 40 50)

Boring backfilled after 24-hour water observations.

PAGE 2 of 3

www.geotechnical-solutions.com

PROJECT: Hartland Drive Bridges — PROJECT NO.: GP-192603
CLIENT: Timber Ridge at Hartland, LLC — BORING NO.: BR-4
PROJECT LOCATION: Loudoun County, Virginia
LOCATION: Hartland Drive Station 87+80, CL — ELEVATION: 303.66 ft. MSL
DRILLER: Recon Drilling, Inc. (A. Espinoza) — LOGGED BY: J. Kline
DRILLING METHOD: 3.25" I.D. HSA w/Autohammer & NQ Core Bit (CME 550 — DATE: 05/15/2019
DEPTH TO WATER> INITIAL: ∇ 4 ft. AFTER 24 HOURS: ∇ 4 ft. CAVING> ℄ 18 ft.

This information pertains only to this boring and should not be interpreted as being indicative of the site.

Depth/Elevation (Feet)	Description	USCS Class.	Sample No.	Blow Counts	Recovery (in.)	Moisture Content (%)	Liquid Limit	Plasticity Index	%#200
42 / 261	brown and gray indurated, argillaceous and interbedded, SILTSTONE and SANDSTONE, highly to moderately fractured, slightly rough, with <0.2 in. separation, partially calcite-filled, hard wall rock, continuous at low angle, Core Run Length - 5 feet Recovery - 97.9% RQD = 68.5 = Fair Quality								
45 / 258	Slightly weathered, moderately hard, thin-bedded reddish brown and gray indurated and argillaceousd, SANDSTONE, highly to moderately fractured, slightly rough, with <0.2 in. separation, partially calcite-filled, hard wall rock, continuous at low to high angle, Core Run Length - 5 feet Recovery - 98.3% RQD = 72.5 = Fair Quality		R4		60				
48 / 255	Auger refusal at 28.5 feet, rock core terminated at 48.5 feet.								
51 / 252									
54 / 249									
57 / 246									
60 / 243									

Graphic: brown and gray indurated, argillaceous and interbedded, SILTSTONE and SANDSTONE, highly to moderately fractured, slightly rough, with <0.2 in. separation, partially calcite-filled, hard wall rock, continuous at low angle, Core Run Length - 5 feet Recovery - 97.9% RQD = 68.5 = Fair Quality; Slightly weathered, moderately hard, thin-bedded reddish brown and gray indurated and argillaceousd, SANDSTONE, highly to moderately fractured, slightly rough, with <0.2 in. separation, partially calcite-filled, hard wall rock, continuous at low to high angle, Core Run Length - 5 feet Recovery - 98.3% RQD = 72.5 = Fair Quality

Water Content - ⊗ (PI – LL)
Penetration - ● (10 20 30 40 50)

Boring backfilled after 24-hour water observations.

PAGE 3 of 3

The subsurface information shown on the boring logs in these plans was obtained with reasonable care and recorded in good faith solely for use by the Department in establishing design controls for the project. The Department has no reason to suspect that such information is not reasonably accurate as an approximate indication of the subsurface conditions at the sites where the borings were taken. The Department does not in any way warrant or guarantee that such data can be projected as indicative of conditions beyond the limits of the borings shown; and any such projections by bidders are purely interpretive and altogether speculative. Further, the Department does not in any way guarantee, either expressly or by implication, the sufficiency of the information for bid purposes.

The boring logs are made available to bidders in order that they may have access to subsurface data identical to that which is possessed by the Department, and are not intended as a substitute for personal investigation, interpretation and judgment by the bidders.

PRELIMINARY PLANS

THESE PLANS NOT TO BE USED FOR CONSTRUCTION

Dewberry

Dewberry Engineers Inc.
8401 ARLINGTON BLVD.
FAIRFAX, VA 22031
PHONE: 703.849.0100
FAX: 703.849.0518

HARTLAND DRIVE OVER BROAD RUN TRIBUTARY
LOUDOUN COUNTY
CPAP-2020-0009

SEAL

A copy of the original signed geotechnical submittal is on file in the District Office.

No.	DATE	BY	Description

REVISIONS

DESIGNED BY TPV
DRAWN BY JPD
CHECKED BY PCA
DATE APRIL 2020

TITLE

ENGINEERING GEOLOGY - 5

PROJECT NO. 50113885

XXX-XX

SHEET NO. 41 of 49

Received by VMRC September 1, 2020 /blh

PROJECT: Hartland Drive Bridges — PROJECT NO.: GP-192603
CLIENT: Timber Ridge at Hartland, LLC — BORING NO.: BR-5
PROJECT LOCATION: Loudoun County, Virginia
LOCATION: Hartland Drive Station 89+76, CL — ELEVATION: 299.04 ft. MSL
DRILLER: Recon Drilling, Inc. (C. Gudiel) — LOGGED BY: J. Kline
DRILLING METHOD: 3.25" I.D. HSA w/Autohammer (Diedrich D-50 ATV — DATE: 05/11/2019
DEPTH TO WATER> INITIAL: ▽ 5 ft. AFTER 24 HOURS: ▽ 5 ft. CAVING> ℄ 30 ft.

www.geotechnical-solutions.com

This information pertains only to this boring and should not be interpreted as being indicative of the site.

Depth/Elevation (Feet)	Description	USCS Class.	Sample No.	Blow Counts	Recovery (in.)	Moisture Content (%)	Liquid Limit	Plasticity Index	%#200
0 / 297	3 inches of TOPSOIL (0.25)	TOPS							
	Brown, moist, soft to medium stiff sandy Lean CLAY (Alluvium)	CL	S1	1 2 2	23	33.5			
3 / 294			S2	5 3 3	15	23.2	33	13	83.8
			S3	3 4 6	24	23.5			
6 / 291	Reddish brown, moist, very hard Weathered ROCK (Siltstone) (6.0)	TOM	S4	19 33 50/3"	13	8.1			
9 / 288			S5	50/3"	1	2.1			
12 / 285			S6	50/1"	1	2.4			
15 / 282			S7	50/1"	1	5.1			
18 / 279									

Water Content - ⊗ Penetration - ● (10 20 30 40 50)

Boring backfilled after 24-hour water observations.

PAGE 1 of 3

PROJECT: Hartland Drive Bridges — PROJECT NO.: GP-192603
CLIENT: Timber Ridge at Hartland, LLC — BORING NO.: BR-5
PROJECT LOCATION: Loudoun County, Virginia
LOCATION: Hartland Drive Station 89+76, CL — ELEVATION: 299.04 ft. MSL
DRILLER: Recon Drilling, Inc. (C. Gudiel) — LOGGED BY: J. Kline
DRILLING METHOD: 3.25" I.D. HSA w/Autohammer (Diedrich D-50 ATV — DATE: 05/11/2019
DEPTH TO WATER> INITIAL: ▽ 5 ft. AFTER 24 HOURS: ▽ 5 ft. CAVING> ℄ 30 ft.

www.geotechnical-solutions.com

This information pertains only to this boring and should not be interpreted as being indicative of the site.

Depth/Elevation (Feet)	Description	USCS Class.	Sample No.	Blow Counts	Recovery (in.)	Moisture Content (%)	Liquid Limit	Plasticity Index	%#200
21 / 276			S8	50/1"	1	4.5			
24 / 273									
27 / 270			S9	50/1"	1	5.4			
30 / 267			S10	50/0"	NR				
33 / 264	Slightly weathered, moderately hard, thin-bedded reddish brown indurated and argillaceous, SANDSTONE, highly to moderately fractured, slightly rough, with <0.2 in. separation, partially calcite-filled, hard wall rock, continuous at low to moderate angle, Core Run Length - 5 feet Recovery - 93.3% RQD = 78.75 = Good Quality Slightly weathered, moderately (35.0)	ROCK	R1		56				
36 / 261									
39 / 258									

Water Content - ⊗ Penetration - ● (10 20 30 40 50)

Boring backfilled after 24-hour water observations.

PAGE 2 of 3

PROJECT: Hartland Drive Bridges — PROJECT NO.: GP-192603
CLIENT: Timber Ridge at Hartland, LLC — BORING NO.: BR-5
PROJECT LOCATION: Loudoun County, Virginia
LOCATION: Hartland Drive Station 89+76, CL — ELEVATION: 299.04 ft. MSL
DRILLER: Recon Drilling, Inc. (C. Gudiel) — LOGGED BY: J. Kline
DRILLING METHOD: 3.25" I.D. HSA w/Autohammer (Diedrich D-50 ATV — DATE: 05/11/2019
DEPTH TO WATER> INITIAL: ▽ 5 ft. AFTER 24 HOURS: ▽ 5 ft. CAVING> ℄ 30 ft.

www.geotechnical-solutions.com

This information pertains only to this boring and should not be interpreted as being indicative of the site.

Depth/Elevation (Feet)	Description	USCS Class.	Sample No.	Blow Counts	Recovery (in.)	Moisture Content (%)	Liquid Limit	Plasticity Index	%#200
42 / 255	hard, thin-bedded reddish brown indurated, interbedded and argillaceous, SILTSTONE and SANDSTONE, highly to moderately fractured, slightly rough, with <0.2 in. separation, partially calcite-filled, hard wall rock, continuous at low to moderate angle, Core Run Length - 5 feet Recovery - 96.7% RQD = 93.1 = Excellent Quality		R2		57				
45 / 252	Slightly weathered, moderately hard, thin-bedded reddish brown and gray indurated and argillaceous, SILTSTONE and SANDSTONE, series of upward-fining layers from 45.7 to 48.3 feet, highly fractured, slightly rough, with <0.2 in. separation, partially calcite-filled, hard wall rock, continuous at low to moderate angle, Core Run Length - 5 feet Recovery - 95% RQD = 86.9 = Good Quality		R3		56				
48 / 249	Slightly weathered, moderately hard, thin-bedded reddish brown and gray indurated and argillaceous, SANDSTONE, highly to moderately fractured, slightly rough, with <0.2 in. separation, partially calcite-filled, hard wall rock, continuous at low to moderate angle, Core Run Length - 5 feet Recovery - 96.7% RQD = 65.6 = Fair Quality		R4		60				
51 / 246	Auger refusal at 35 feet, rock core terminated at 55 feet.								
54 / 243									
57 / 240									
60									

Water Content - ⊗ Penetration - ● (10 20 30 40 50)

Boring backfilled after 24-hour water observations.

PAGE 3 of 3

042

The subsurface information shown on the boring logs in these plans was obtained with reasonable care and recorded in good faith solely for use by the Department in establishing design controls for the project. The Department has no reason to suspect that such information is not reasonably accurate as an approximate indication of the subsurface conditions at the sites where the borings were taken. The Department does not in any way warrant or guarantee that such data can be projected as indicative of conditions beyond the limits of the borings shown; and any such projections by bidders are purely interpretive and altogether speculative. Further, the Department does not in any way guarantee, either expressly or by implication, the sufficiency of the information for bid purposes.

The boring logs are made available to bidders in order that they may have access to subsurface data identical to that which is possessed by the Department, and are not intended as a substitute for personal investigation, interpretation and judgment by the bidders.

① Abutment B bottom of footing elevation, 296.50

② Abutment B estimated pile tip elevation, 261.50

PRELIMINARY PLANS

THESE PLANS NOT TO BE USED FOR CONSTRUCTION

Dewberry

Dewberry Engineers Inc.
8401 ARLINGTON BLVD.
FAIRFAX, VA 22031
PHONE: 703.849.0100
FAX: 703.849.0518

HARTLAND DRIVE OVER BROAD RUN TRIBUTARY
LOUDOUN COUNTY
CPAP-2020-0009

SEAL

A copy of the original signed geotechnical submittal is on file in the District Office.

No.	DATE	BY	Description

REVISIONS

DESIGNED BY TPV
DRAWN BY JPD
CHECKED BY PCA
DATE APRIL 2020

TITLE

ENGINEERING GEOLOGY - 6

PROJECT NO. 50113885

XXX-XX

SHEET NO. 42 of 49

Received by VMRC September 1, 2020 /blh

PROJECT: Hartland Drive Bridges — PROJECT NO.: GP-192603
CLIENT: Timber Ridge at Hartland, LLC — BORING NO.: BR-6
PROJECT LOCATION: Loudoun County, Virginia
LOCATION: Hartland Drive Station 90+40, CL — ELEVATION: 314.14 ft. MSL
DRILLER: Recon Drilling, Inc. (A. Espinoza) — LOGGED BY: J. Kline
DRILLING METHOD: 3.25" I.D. HSA w/Autohammer & NQ Core Bit (CME 550 — DATE: 05/13/2019
DEPTH TO WATER) INITIAL: Dry AFTER 24 HOURS: N/A CAVING) C 12 ft.

www.geotechnical-solutions.com

This information pertains only to this boring and should not be interpreted as being indicative of the site

Depth/Elevation (Feet)	Graphic	Description	USCS Class.	Sample No.	Blow Counts	Recovery (in.)	Moisture Content (%)	Liquid Limit	Plasticity Index	%#200
0		3 inches of TOPSOIL	TOPS							
		0.25 Brown, moist, soft to medium stiff sandy SILT	ML	S1	2 4 6 8	24				
312		2.5 Brown, moist, very hard Weathered ROCK (Siltstone)	IGM	S2	18 30 50	18	22.4			
3				S3	14 18 20 24	24	18.0			
309				S4	50/2"	1	9.2			
6				S5	50/1"	1	2.9			
306										
9										
303										
12		13.0 Slightly weathered, moderately hard, thin-bedded reddish brown indurated and argillaceous, SANDSTONE, intensely to highly fractured, slightly rough, with <0.2 in. separation, partially calcite-filled, hard wall rock, continuous at low to moderate angle, Core Run Length - 5 feet Recovery - 97.5% RQD = 66.3 = Fair Quality Slightly weathered, moderately hard, thin-bedded reddish brown indurated, interbedded and argillaceous, SILTSTONE and SANDSTONE, highly to	ROCK	S6	50/0"	NR				
300				R1		60				
15										
297										
18										
294										

Penetration scale: 10 20 30 40 50 — 10, 80, 38, 50/2", 50/1", 50/0"

Boring backfilled on completion for safety concerns.

PAGE 1 of 2

PROJECT: Hartland Drive Bridges — PROJECT NO.: GP-192603
CLIENT: Timber Ridge at Hartland, LLC — BORING NO.: BR-6
PROJECT LOCATION: Loudoun County, Virginia
LOCATION: Hartland Drive Station 90+40, CL — ELEVATION: 314.14 ft. MSL
DRILLER: Recon Drilling, Inc. (A. Espinoza) — LOGGED BY: J. Kline
DRILLING METHOD: 3.25" I.D. HSA w/Autohammer & NQ Core Bit (CME 550 — DATE: 05/13/2019
DEPTH TO WATER) INITIAL: Dry AFTER 24 HOURS: N/A CAVING) C 12 ft.

www.geotechnical-solutions.com

This information pertains only to this boring and should not be interpreted as being indicative of the site

Depth/Elevation (Feet)	Graphic	Description	USCS Class.	Sample No.	Blow Counts	Recovery (in.)	Moisture Content (%)	Liquid Limit	Plasticity Index	%#200
21		moderately fractured, slightly rough, with <0.2 in. separation, partially calcite-filled, hard wall rock, continuous at low to moderate angle, Core Run Length - 5 feet Recovery - 100% RQD = 71.3 = Fair Quality Slightly weathered, moderately hard, thin-bedded reddish brown indurated and argillaceous, SILTSTONE, intensely to highly fractured, slightly rough, with <0.2 in. separation, partially calcite-filled, hard wall rock, continuous at low to moderate angle, Core Run Length - 5 feet Recovery - 100% RQD = 51.5 = Fair Quality Slightly weathered, moderately hard, thin-bedded reddish brown indurated and argillaceous, SILTSTONE, intensely to highly fractured, slightly rough, with <0.2 in. separation, partially calcite-filled, hard wall rock, continuous at low to moderate angle, Core Run Length - 5 feet Recovery - 100% RQD = 69.2 = Fair Quality Slightly weathered, moderately hard, thin-bedded reddish brown indurated and argillaceous, SILTSTONE, intensely to highly fractured, slightly rough, with <0.2 in. separation, hard wall rock, continuous at low angle, Core Run Length - 5 feet Recovery - 93.2% RQD = 50.2 = Fair Quality Auger refusal at 13 feet, rock core terminated at 38 feet.		R2		60				
291										
24										
288				R3		60				
27										
285										
30				R4		60				
282										
33										
279				R5		60				
36										
276										
39										

Penetration scale: 10 20 30 40 50

Boring backfilled on completion for safety concerns.

PAGE 2 of 2

The subsurface information shown on the boring logs in these plans was obtained with reasonable care and recorded in good faith solely for use by the Department in establishing design controls for the project. The Department has no reason to suspect that such information is not reasonably accurate as an approximate indication of the subsurface conditions at the sites where the borings were taken. The Department does not in any way warrant or guarantee that such data can be projected as indicative of conditions beyond the limits of the borings shown; and any such projections by bidders are purely interpretive and altogether speculative. Further, the Department does not in any way guarantee, either expressly or by implication, the sufficiency of the information for bid purposes.

The boring logs are made available to bidders in order that they may have access to subsurface data identical to that which is possessed by the Department, and are not intended as a substitute for personal investigation, interpretation and judgment by the bidders.

PRELIMINARY PLANS

THESE PLANS NOT TO BE USED FOR CONSTRUCTION

Dewberry

Dewberry Engineers Inc.
8401 ARLINGTON BLVD.
FAIRFAX, VA 22031
PHONE: 703.849.0100
FAX: 703.849.0518

HARTLAND DRIVE OVER BROAD RUN TRIBUTARY
LOUDOUN COUNTY
CPAP-2020-0009

SEAL

A copy of the original signed geotechnical submittal is on file in the District Office.

No.	DATE	BY	Description

REVISIONS

DESIGNED BY TPV
DRAWN BY JPD
CHECKED BY PCA
DATE APRIL 2020

TITLE

ENGINEERING GEOLOGY - 7

PROJECT NO. 50113885

XXX-XX

SHEET NO. 43 of 49

043

Received by VMRC September 1, 2020 /blh

PROJECT: Hartland Drive Bridges — PROJECT NO.: GP-192603-A
CLIENT: Timber Ridge at Hartland, LLC — BORING NO.: TB-108
PROJECT LOCATION: Loudoun County, VA
LOCATION: South Bridge - South Abutment — ELEVATION: 298.93 ft. MSL
DRILLER: Recon Drilling, Inc. — LOGGED BY: S. Fallah
DRILLING METHOD: 2.25" I.D. HSA w/Autohammer (CME 550 ATV Rig) — DATE: 03/11/2020
DEPTH TO - WATER> INITIAL: ▽ 3.5 ft. AFTER 24 HOURS: ▽ 0.5 ft. CAVING> ⊏ 15
GRID COORDINATES: N 7035906.92 E 11745787.42

www.geotechnical-solutions.com

This information pertains only to this boring and should not be interpreted as being indicative of the site.

Depth/Elevation (Feet)	Graphic	Description	USCS Class.	Sample No.	Blow Counts	Recovery (in.)	Moisture Content (%)	Liquid Limit	Plasticity Index	%#200	PI — LL; Water Content - ⊗; Penetration - ● (10 20 30 40 50)
0		2 inches of TOPSOIL (0.16)	TOPS								
		Alluvium - Brown SANDY LEAN CLAY, soft moist,	CL	S1	3 WOH WOH	10					1
3		Residual - Red-brown SANDY LEAN CLAY, contains siltstone fragments, very soft , moist	CL	S2	WOH WOH WOH	18					50/5"
				S3	WOH WOH 50/5"	12					
6		IGM - Highly weathered, moderately hard, medium bedded red-brown SILTSTONE (5.5)	IGM	S4	50/2"	1					50/2"
9				S5	50/1"	1					50/1"
12				S6	50/2"	1					50/2"
15				S7	50/1"	1					50/1"

Boring backfilled after 24 hour water level observation.

Figure PAGE 1 of 3

PROJECT: Hartland Drive Bridges — PROJECT NO.: GP-192603-A
CLIENT: Timber Ridge at Hartland, LLC — BORING NO.: TB-108
PROJECT LOCATION: Loudoun County, VA
LOCATION: South Bridge - South Abutment — ELEVATION: 298.93 ft. MSL
DRILLER: Recon Drilling, Inc. — LOGGED BY: S. Fallah
DRILLING METHOD: 2.25" I.D. HSA w/Autohammer (CME 550 ATV Rig) — DATE: 03/11/2020
DEPTH TO - WATER> INITIAL: ▽ 3.5 ft. AFTER 24 HOURS: ▽ 0.5 ft. CAVING> ⊏ 15
GRID COORDINATES: N 7035906.92 E 11745787.42

www.geotechnical-solutions.com

This information pertains only to this boring and should not be interpreted as being indicative of the site.

Depth/Elevation (Feet)	Graphic	Description	USCS Class.	Sample No.	Blow Counts	Recovery (in.)	Moisture Content (%)	Liquid Limit	Plasticity Index	%#200	PI — LL; Water Content - ⊗; Penetration - ● (10 20 30 40 50)
21											
24		Slightly weathered, moderately hard, thin-bedded reddish brown argillaceous indurated, cross-bedded and interbedded SILTSTONE and SANDSTONE, moderately to highly fractured, slightly rough, with no separation, hard wall rock, continuous at moderate to high angle, moderately to highly jointed, slightly rough with no separation, hard wall rock, continuous at low to moderate angle Core Run Length - 5 feet Recovery = 100.0% RQD = 93.1 = Excellent Quality (23.0)	ROCK	S8	50/0"	0					50/0"
27				R1		60					
30		Slightly weathered, moderately hard, thin-bedded reddish brown argillaceous indurated, cross-bedded and interbedded SILTSTONE and SANDSTONE, moderately to highly fractured, slightly rough, with no separation, hard wall rock, continuous at moderate to high angle, moderately to highly jointed, slightly rough with <0.2 in. separation, hard wall rock, continuous at low to moderate angle Core Run Length - 5 feet Recovery = 100.0% RQD = 95.8 = Excellent Quality		R2		60					
33		Slightly weathered, moderately hard, thin-bedded reddish		R3		60					
36											
39											

Boring backfilled after 24 hour water level observation.

Figure PAGE 2 of 3

PROJECT: Hartland Drive Bridges — PROJECT NO.: GP-192603-A
CLIENT: Timber Ridge at Hartland, LLC — BORING NO.: TB-108
PROJECT LOCATION: Loudoun County, VA
LOCATION: South Bridge - South Abutment — ELEVATION: 298.93 ft. MSL
DRILLER: Recon Drilling, Inc. — LOGGED BY: S. Fallah
DRILLING METHOD: 2.25" I.D. HSA w/Autohammer (CME 550 ATV Rig) — DATE: 03/11/2020
DEPTH TO - WATER> INITIAL: ▽ 3.5 ft. AFTER 24 HOURS: ▽ 0.5 ft. CAVING> ⊏ 15
GRID COORDINATES: N 7035906.92 E 11745787.42

www.geotechnical-solutions.com

This information pertains only to this boring and should not be interpreted as being indicative of the site.

Depth/Elevation (Feet)	Graphic	Description	USCS Class.	Sample No.	Blow Counts	Recovery (in.)	Moisture Content (%)	Liquid Limit	Plasticity Index	%#200	PI — LL; Water Content - ⊗; Penetration - ● (10 20 30 40 50)
42		brown argillaceous indurated, cross-bedded and interbedded SILTSTONE and SANDSTONE, moderately to highly fractured, slightly rough, with no separation, hard wall rock, continuous at moderate to high angle, moderately to highly jointed, slightly rough with no separation, hard wall rock, continuous at low to moderate angle Core Run Length - 5 feet Recovery = 100.0% RQD = 100.0 = Excellent Quality		R4		60					
45		Slightly weathered, moderately hard, thin-bedded reddish brown argillaceous indurated, cross-bedded and interbedded SILTSTONE and SANDSTONE, moderately to highly fractured, slightly rough, with <0.2 in. separation, hard wall rock, continuous at moderate to high angle, moderately to highly jointed, slightly rough with no separation, hard wall rock, continuous at low to moderate angle Core Run Length - 5 feet Recovery = 100.0% RQD = 100.0 = Excellent Quality									
48											
51											
54											
57		Auger refusal at 23 feet. Rock core terminated at 43 feet.									
60											

Boring backfilled after 24 hour water level observation.

Figure PAGE 3 of 3

The subsurface information shown on the boring logs in these plans was obtained with reasonable care and recorded in good faith solely for use by the Department in establishing design controls for the project. The Department has no reason to suspect that such information is not reasonably accurate as an approximate indication of the subsurface conditions at the sites where the borings were taken. The Department does not in any way warrant or guarantee that such data can be projected as indicative of conditions beyond the limits of the borings shown; and any such projections by bidders are purely interpretive and altogether speculative. Further, the Department does not in any way guarantee, either expressly or by implication, the sufficiency of the information for bid purposes.

The boring logs are made available to bidders in order that they may have access to subsurface data identical to that which is possessed by the Department, and are not intended as a substitute for personal investigation, interpretation and judgment by the bidders.

① Abutment B bottom of footing elevation, 296.50

② Abutment B estimated pile tip elevation, 274.00

PRELIMINARY PLANS
THESE PLANS NOT TO BE USED FOR CONSTRUCTION

Dewberry

Dewberry Engineers Inc.
8401 ARLINGTON BLVD.
FAIRFAX, VA 22031
PHONE: 703.849.0100
FAX: 703.849.0518

HARTLAND DRIVE OVER BROAD RUN TRIBUTARY
LOUDOUN COUNTY
CPAP-2020-0009

SEAL

A copy of the original signed geotechnical submittal is on file in the District Office.

No.	DATE	BY	Description

REVISIONS

DESIGNED BY TPV
DRAWN BY JPD
CHECKED BY PCA
DATE APRIL 2020

TITLE

ENGINEERING GEOLOGY - 8

PROJECT NO. 50113885

XXX-XX

SHEET NO. 44 of 49

044

Received by VMRC September 1, 2020 /blh

www.geotechnical-solutions.com

PROJECT: Hartland Drive Bridges — PROJECT NO.: GP-192603-A
CLIENT: Timber Ridge at Hartland, LLC — BORING NO.: TB-109
PROJECT LOCATION: Loudoun County, VA
LOCATION: South Bridge - South Abutment — ELEVATION: 299.11 ft. MSL
DRILLER: Recon Drilling, Inc. — LOGGED BY: S. Fallah
DRILLING METHOD: 2.25" I.D. HSA w/Autohammer (CME 550 ATV Rig) — DATE: 03/12/2020
DEPTH TO - WATER> INITIAL: ▽ 2.5 ft. AFTER 24 HOURS: ▼ 0.5 ft. CAVING> ℄ 14
GRID COORDINATES: N 7035906.92 E 11745787.42

This information pertains only to this boring and should not be interpreted as being indicative of the site

Depth/Elevation (Feet)	Graphic	Description	USCS Class.	Sample No.	Blow Counts	Recovery (in.)	Moisture Content (%)	Liquid Limit	Plasticity Index	%#200	PI — LL; Water Content - ⊗; Penetration - ● (10 20 30 40 50)
0 / 299		2 inches of TOPSOIL (0.16)	TOPS								
		Alluvium - Brown SANDY LEAN CLAY, medium stiff, moist,	CL	S1	1 3 3	18					6; 1
3 / 297		Residual - Red-brown SANDY LEAN CLAY, contains siltstone fragments, very soft to medium stiff, moist	CL	S2	WOH WOH WOH	24					
				S3	4 6 50/5"	17					56/11"
6 / 294		IGM - Highly weathered, moderately hard, medium bedded red-brown SILTSTONE (5.5)	IGM	S4	50/2"	1					50/2"
9 / 291				S5	50/5"	2					50/5"
12 / 288		Slightly weathered, moderately hard, thin-bedded reddish brown argillaceous indurated, cross-bedded and interbedded SILTSTONE and SANDSTONE, moderately to highly fractured, slightly rough, with no separation, hard wall rock, continuous at moderate to high angle, moderately to highly jointed, slightly rough with no separation, hard wall rock, continuous at low to moderate angle Core Run Length - 5 feet Recovery = 100.0% RQD = 93.1 = Excellent (12.0)	ROCK	S6	50/0"	0					50/0"
15 / 285				R1		60					
18 / 282				R2		60					

Boring backfilled after 24 hour water level observation.

Figure PAGE 1 of 3

www.geotechnical-solutions.com

PROJECT: Hartland Drive Bridges — PROJECT NO.: GP-192603-A
CLIENT: Timber Ridge at Hartland, LLC — BORING NO.: TB-109
PROJECT LOCATION: Loudoun County, VA
LOCATION: South Bridge - South Abutment — ELEVATION: 299.11 ft. MSL
DRILLER: Recon Drilling, Inc. — LOGGED BY: S. Fallah
DRILLING METHOD: 2.25" I.D. HSA w/Autohammer (CME 550 ATV Rig) — DATE: 03/12/2020
DEPTH TO - WATER> INITIAL: ▽ 2.5 ft. AFTER 24 HOURS: ▼ 0.5 ft. CAVING> ℄ 14
GRID COORDINATES: N 7035906.92 E 11745787.42

This information pertains only to this boring and should not be interpreted as being indicative of the site

Depth/Elevation (Feet)	Graphic	Description	USCS Class.	Sample No.	Blow Counts	Recovery (in.)	Moisture Content (%)	Liquid Limit	Plasticity Index	%#200	PI — LL; Water Content - ⊗; Penetration - ● (10 20 30 40 50)
21 / 279		Quality Slightly weathered, moderately hard, thin-bedded reddish brown argillaceous indurated, cross-bedded and interbedded SILTSTONE and SANDSTONE, moderately to highly fractured, slightly rough, with no separation, hard wall rock, continuous at moderate to high angle, moderately to highly jointed, slightly rough with <0.2 in. separation, hard wall rock, continuous at low to moderate angle Core Run Length - 5 feet Recovery = 100.0% RQD = 95.8 = Excellent Quality		R3		60					
24 / 276											
27 / 273		Slightly weathered, moderately hard, thin-bedded reddish brown argillaceous indurated, cross-bedded and interbedded SILTSTONE and SANDSTONE, moderately to highly fractured, slightly rough, with no separation, hard wall rock, continuous at moderate to high angle, moderately to highly jointed, slightly rough with no separation, hard wall rock, continuous at low to moderate angle Core Run Length - 5 feet Recovery = 100.0% RQD = 100.0 = Excellent Quality		R4		60					
30 / 270											
33 / 267		Slightly weathered, moderately hard, thin-bedded reddish brown argillaceous indurated, cross-bedded and interbedded SILTSTONE and SANDSTONE, moderately to highly fractured, slightly rough, with <0.2 in. separation, hard wall rock,									
36 / 264											
39 / 261											

Boring backfilled after 24 hour water level observation.

Figure PAGE 2 of 3

www.geotechnical-solutions.com

PROJECT: Hartland Drive Bridges — PROJECT NO.: GP-192603-A
CLIENT: Timber Ridge at Hartland, LLC — BORING NO.: TB-109
PROJECT LOCATION: Loudoun County, VA
LOCATION: South Bridge - South Abutment — ELEVATION: 299.11 ft. MSL
DRILLER: Recon Drilling, Inc. — LOGGED BY: S. Fallah
DRILLING METHOD: 2.25" I.D. HSA w/Autohammer (CME 550 ATV Rig) — DATE: 03/12/2020
DEPTH TO - WATER> INITIAL: ▽ 2.5 ft. AFTER 24 HOURS: ▼ 0.5 ft. CAVING> ℄ 14
GRID COORDINATES: N 7035906.92 E 11745787.42

This information pertains only to this boring and should not be interpreted as being indicative of the site

Depth/Elevation (Feet)	Graphic	Description	USCS Class.	Sample No.	Blow Counts	Recovery (in.)	Moisture Content (%)	Liquid Limit	Plasticity Index	%#200	PI — LL; Water Content - ⊗; Penetration - ● (10 20 30 40 50)
42 / 258		continuous at moderate to high angle, moderately to highly jointed, slightly rough with no separation, hard wall rock, continuous at low to moderate angle Core Run Length - 5 feet Recovery = 100.0% RQD = 100.0 = Excellent Quality									
45 / 255											
48 / 252		Auger refusal at 12 feet. Rock core terminated at 32 feet.									
51 / 249											
54 / 246											
57 / 243											
60 / 240											

Boring backfilled after 24 hour water level observation.

Figure PAGE 3 of 3

045

The subsurface information shown on the boring logs in these plans was obtained with reasonable care and recorded in good faith solely for use by the Department in establishing design controls for the project. The Department has no reason to suspect that such information is not reasonably accurate as an approximate indication of the subsurface conditions at the sites where the borings were taken. The Department does not in any way warrant or guarantee that such data can be projected as indicative of conditions beyond the limits of the borings shown; and any such projections by bidders are purely interpretive and altogether speculative. Further, the Department does not in any way guarantee, either expressly or by implication, the sufficiency of the information for bid purposes.

The boring logs are made available to bidders in order that they may have access to subsurface data identical to that which is possessed by the Department, and are not intended as a substitute for personal investigation, interpretation and judgment by the bidders.

① Abutment B bottom of footing elevation, 296.50

② Abutment B estimated pile tip elevation, 282.00

PRELIMINARY PLANS
THESE PLANS NOT TO BE USED FOR CONSTRUCTION

Received by VMRC September 1, 2020 /blh

Dewberry

Dewberry Engineers Inc.
8401 ARLINGTON BLVD.
FAIRFAX, VA 22031
PHONE: 703.849.0100
FAX: 703.849.0518

HARTLAND DRIVE OVER BROAD RUN TRIBUTARY
LOUDOUN COUNTY
CPAP-2020-0009

SEAL

A copy of the original signed geotechnical submittal is on file in the District Office.

No.	DATE	BY	Description

REVISIONS

DESIGNED BY TPV
DRAWN BY JPD
CHECKED BY PCA
DATE APRIL 2020

TITLE

ENGINEERING GEOLOGY - 9

PROJECT NO. 50113885

XXX-XX

SHEET NO. 45 of 49

www.geotechnical-solutions.com

PROJECT: Hartland Drive Bridges — PROJECT NO.: GP-192603-A
CLIENT: Timber Ridge at Hartland, LLC — BORING NO.: TB-110
PROJECT LOCATION: Loudoun County, VA
LOCATION: South Bridge - South Abutment — ELEVATION: 298.38 ft. MSL
DRILLER: Recon Drilling, Inc. — LOGGED BY: S. Fallah
DRILLING METHOD: 2.25" I.D. HSA w/Autohammer (CME 550 ATV Rig) — DATE: 03/13/2020
DEPTH TO - WATER> INITIAL: ▽ 2.5 ft. AFTER 24 HOURS: ▼ 1.0 ft. CAVING> ℄ 14
GRID COORDINATES: N 7035906.92 E 11745787.42

This information pertains only to this boring and should not be interpreted as being indicative of the site

Depth/Elevation (Feet)	Graphic	Description	USCS Class.	Sample No.	Blow Counts	Recovery (in.)	Moisture Content (%)	Liquid Limit	Plasticity Index	%(#200)	PI — LL; Water Content - ⊗; Penetration - ● (10 20 30 40 50)
0 / 297		2 inches of TOPSOIL (0.16)	TOPS								
		Alluvium - Brown SANDY LEAN CLAY, Very soft moist,	CL	S1	1 1 1	15					
3 / 294		Residual - Red-brown SANDY LEAN CLAY, contains siltstone fragments, very soft , moist	CL	S2	WOH WOH 1	24					
				S3	WOH WOH WOH 3	20					
6 / 291		IGM - Highly weathered, moderately hard, medium bedded red-brown SILTSTONE (6.0)	IGM	S4	50/5"	1					
			ROCK	S5	50/0"	0					
9 / 288		Slightly weathered, moderately hard, thin-bedded reddish brown argillaceous indurated, cross-bedded and interbedded SILTSTONE and SANDSTONE, moderately to highly fractured, slightly rough, with no separation, hard wall rock, continuous at moderate to high angle, moderately to highly jointed, slightly rough with no separation, hard wall rock, continuous at low to moderate angle Core Run Length - 5 feet Recovery = 100.0% RQD = 93.1 = Excellent Quality		R1		60					
12 / 285				R2		60					
15 / 282		Slightly weathered, moderately hard, thin-bedded reddish brown argillaceous indurated, cross-bedded and interbedded SILTSTONE and SANDSTONE, moderately to highly fractured, slightly rough, with no separation, hard wall rock, continuous at moderate to high angle,									
18 / 279				R3		60					

Boring backfilled after 24 hour water level observation.

Figure PAGE 1 of 3

www.geotechnical-solutions.com

PROJECT: Hartland Drive Bridges — PROJECT NO.: GP-192603-A
CLIENT: Timber Ridge at Hartland, LLC — BORING NO.: TB-110
PROJECT LOCATION: Loudoun County, VA
LOCATION: South Bridge - South Abutment — ELEVATION: 298.38 ft. MSL
DRILLER: Recon Drilling, Inc. — LOGGED BY: S. Fallah
DRILLING METHOD: 2.25" I.D. HSA w/Autohammer (CME 550 ATV Rig) — DATE: 03/13/2020
DEPTH TO - WATER> INITIAL: ▽ 2.5 ft. AFTER 24 HOURS: ▼ 1.0 ft. CAVING> ℄ 14
GRID COORDINATES: N 7035906.92 E 11745787.42

This information pertains only to this boring and should not be interpreted as being indicative of the site

Depth/Elevation (Feet)	Graphic	Description	USCS Class.	Sample No.	Blow Counts	Recovery (in.)	Moisture Content (%)	Liquid Limit	Plasticity Index	%(#200)	PI — LL; Water Content - ⊗; Penetration - ● (10 20 30 40 50)
21 / 276		moderately to highly jointed, slightly rough with <0.2 in. separation, hard wall rock, continuous at low to moderate angle Core Run Length - 5 feet Recovery = 100.0% RQD = 95.8 = Excellent Quality Slightly weathered, moderately hard, thin-bedded reddish brown argillaceous indurated, cross-bedded and interbedded SILTSTONE and SANDSTONE, moderately to highly fractured, slightly rough, with no separation, hard wall rock, continuous at moderate to high angle, moderately to highly jointed, slightly rough with no separation, hard wall rock, continuous at low to moderate angle Core Run Length - 5 feet Recovery = 100.0% RQD = 100.0 = Excellent Quality		R4		60					
24 / 273											
27 / 270		Slightly weathered, moderately hard, thin-bedded reddish brown argillaceous indurated, cross-bedded and interbedded SILTSTONE and SANDSTONE, moderately to highly fractured, slightly rough, with <0.2 in. separation, hard wall rock, continuous at moderate to high angle, moderately to highly jointed, slightly rough with no separation, hard wall rock, continuous at low to moderate angle Core Run Length - 5 feet Recovery = 100.0% RQD = 100.0 = Excellent Quality									
30 / 267											
33 / 264											
36 / 261											
39											

Boring backfilled after 24 hour water level observation.

Figure PAGE 2 of 3

www.geotechnical-solutions.com

PROJECT: Hartland Drive Bridges — PROJECT NO.: GP-192603-A
CLIENT: Timber Ridge at Hartland, LLC — BORING NO.: TB-110
PROJECT LOCATION: Loudoun County, VA
LOCATION: South Bridge - South Abutment — ELEVATION: 298.38 ft. MSL
DRILLER: Recon Drilling, Inc. — LOGGED BY: S. Fallah
DRILLING METHOD: 2.25" I.D. HSA w/Autohammer (CME 550 ATV Rig) — DATE: 03/13/2020
DEPTH TO - WATER> INITIAL: ▽ 2.5 ft. AFTER 24 HOURS: ▼ 1.0 ft. CAVING> ℄ 14
GRID COORDINATES: N 7035906.92 E 11745787.42

This information pertains only to this boring and should not be interpreted as being indicative of the site

Depth/Elevation (Feet)	Graphic	Description	USCS Class.	Sample No.	Blow Counts	Recovery (in.)	Moisture Content (%)	Liquid Limit	Plasticity Index	%(#200)	PI — LL; Water Content - ⊗; Penetration - ● (10 20 30 40 50)
42 / 258		Auger refusal at 7 feet. Rock core terminated at 27 feet.									
45 / 255											
48 / 252											
51 / 249											
54 / 246											
57 / 243											
60 / 240											

Boring backfilled after 24 hour water level observation.

Figure PAGE 3 of 3

The subsurface information shown on the boring logs in these plans was obtained with reasonable care and recorded in good faith solely for use by the Department in establishing design controls for the project. The Department has no reason to suspect that such information is not reasonably accurate as an approximate indication of the subsurface conditions at the sites where the borings were taken. The Department does not in any way warrant or guarantee that such data can be projected as indicative of conditions beyond the limits of the borings shown; and any such projections by bidders are purely interpretive and altogether speculative. Further, the Department does not in any way guarantee, either expressly or by implication, the sufficiency of the information for bid purposes.

The boring logs are made available to bidders in order that they may have access to subsurface data identical to that which is possessed by the Department, and are not intended as a substitute for personal investigation, interpretation and judgment by the bidders.

① Abutment B bottom of footing elevation, 296.50

② Abutment B estimated pile tip elevation, 286.50

PRELIMINARY PLANS

THESE PLANS NOT TO BE USED FOR CONSTRUCTION

046

Dewberry

Dewberry Engineers Inc.
8401 ARLINGTON BLVD.
FAIRFAX, VA 22031
PHONE: 703.849.0100
FAX: 703.849.0518

HARTLAND DRIVE OVER BROAD RUN TRIBUTARY
LOUDOUN COUNTY
CPAP-2020-0009

SEAL

A copy of the original signed geotechnical submittal is on file in the District Office.

No.	DATE	BY	Description

REVISIONS

DESIGNED BY TPV
DRAWN BY JPD
CHECKED BY PCA
DATE APRIL 2020

TITLE

ENGINEERING GEOLOGY - 10

PROJECT NO. 50113885

XXX-XX

SHEET NO. 46 of 49

Received by VMRC September 1, 2020 /blh

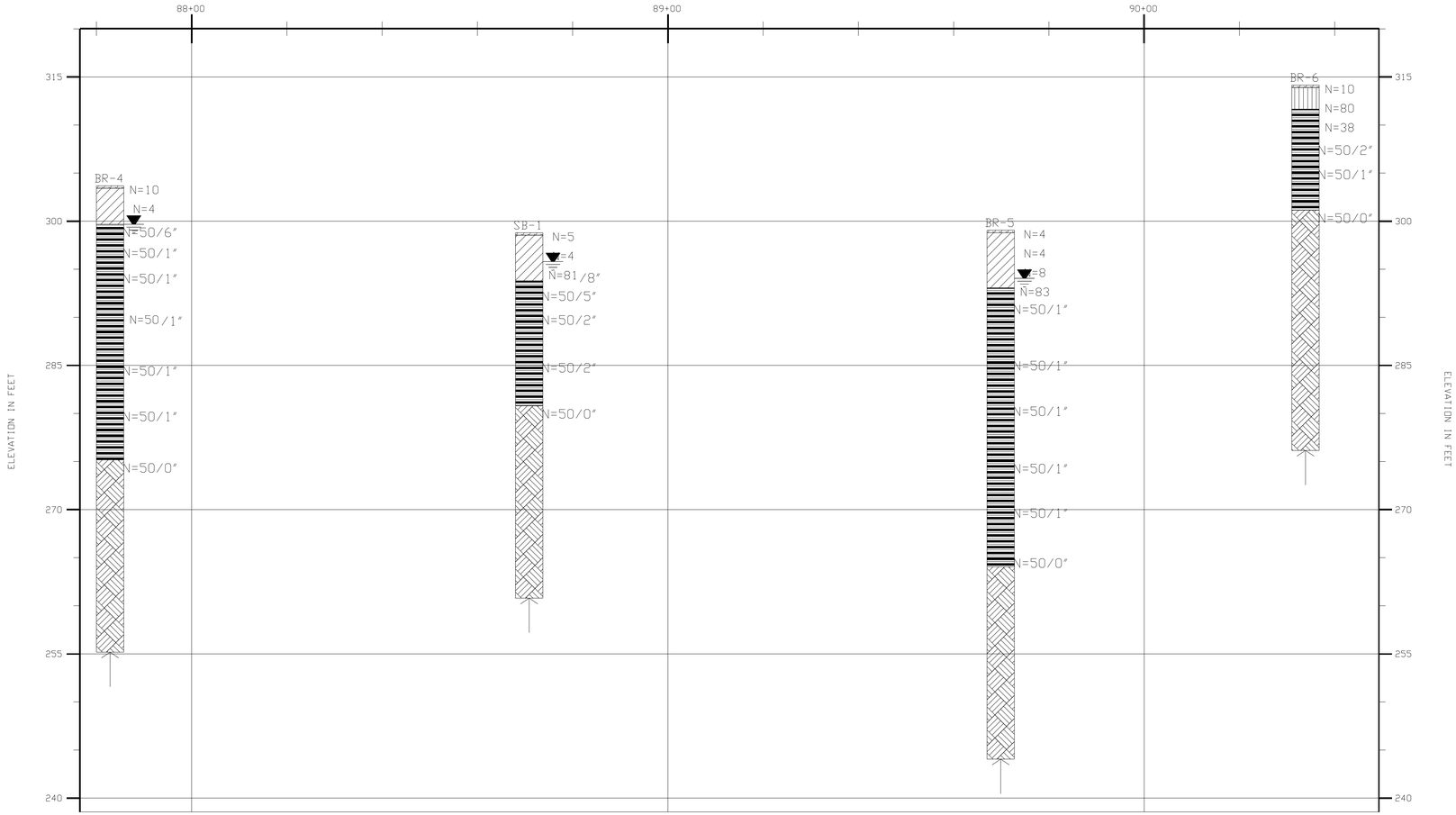

Strata symbols

- Topsoil
- Low plasticity clay
- Weathered Rock
- Bedrock
- Silt

The subsurface information shown on the boring logs in these plans was obtained with reasonable care and recorded in good faith solely for use by the Department in establishing design controls for the project. The Department has no reason to suspect that such information is not reasonably accurate as an approximate indication of the subsurface conditions at the sites where the borings were taken. The Department does not in any way warrant or guarantee that such data can be projected as indicative of conditions beyond the limits of the borings shown; and any such projections by bidders are purely interpretive and altogether speculative. Further, the Department does not in any way guarantee, either expressly or by implication, the sufficiency of the information for bid purposes.

The boring logs are made available to bidders in order that they may have access to subsurface data identical to that which is possessed by the Department, and are not intended as a substitute for personal investigation, interpretation and judgment by the bidders.

PRELIMINARY PLANS

THESE PLANS NOT TO BE USED FOR CONSTRUCTION

Dewberry

Dewberry Engineers Inc.
8401 ARLINGTON BLVD.
FAIRFAX, VA 22031
PHONE: 703.849.0100
FAX: 703.849.0518

HARTLAND DRIVE OVER BROAD RUN TRIBUTARY
LOUDOUN COUNTY
CPAP-2020-0009

SEAL

A copy of the original signed geotechnical submittal is on file in the District Office.

No.	DATE	BY	Description

REVISIONS

DESIGNED BY TPV
DRAWN BY JPD
CHECKED BY PCA
DATE APRIL 2020

TITLE

ENGINEERING GEOLOGY - 11

PROJECT NO. 50113885

XXX-XX

SHEET NO. 47 of 49

047

Received by VMRC September 1, 2020 /blh

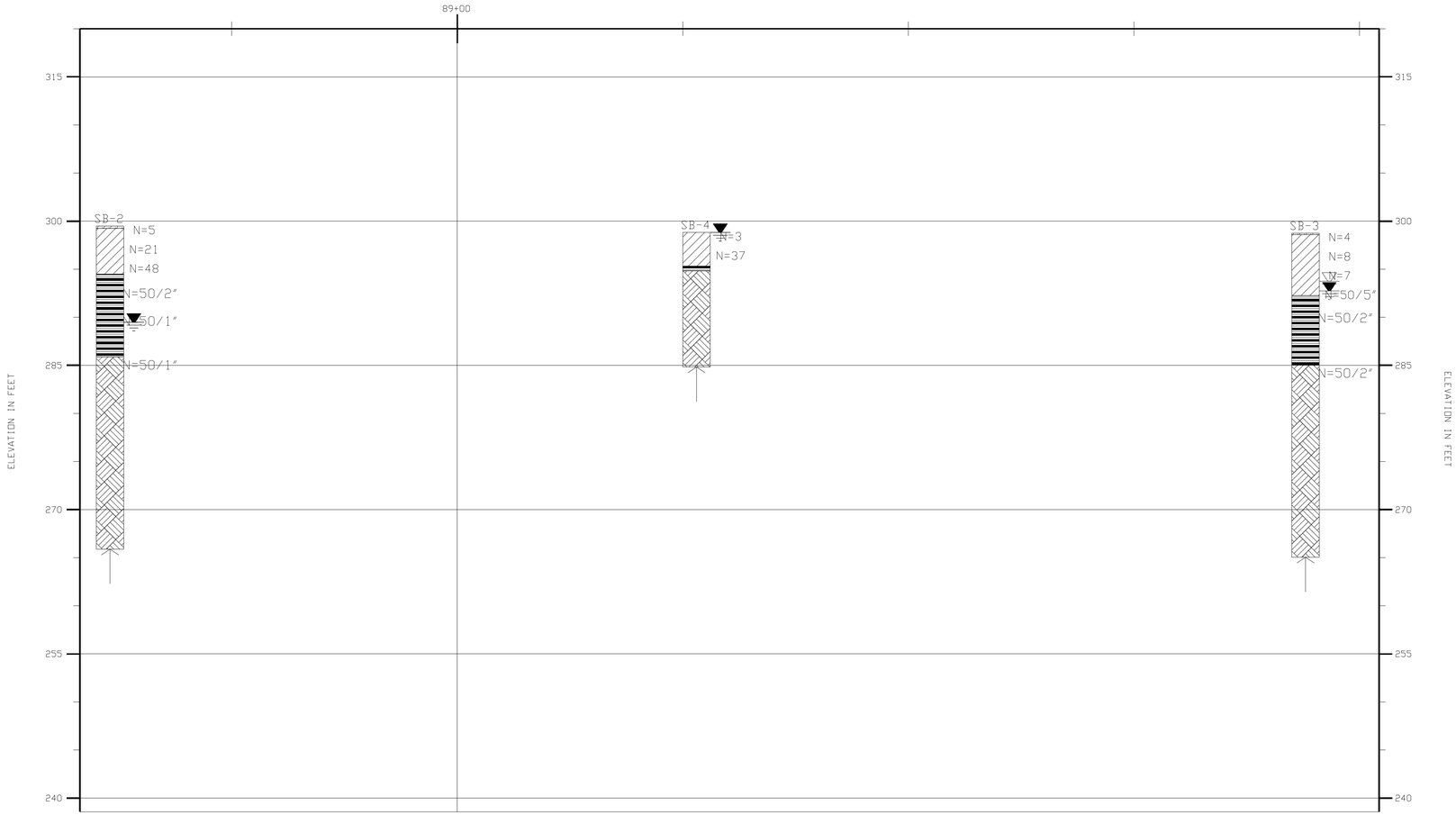

Strata symbols

- Topsoil
- Low plasticity clay
- Weathered Rock
- Bedrock

The subsurface information shown on the boring logs in these plans was obtained with reasonable care and recorded in good faith solely for use by the Department in establishing design controls for the project. The Department has no reason to suspect that such information is not reasonably accurate as an approximate indication of the subsurface conditions at the sites where the borings were taken. The Department does not in any way warrant or guarantee that such data can be projected as indicative of conditions beyond the limits of the borings shown; and any such projections by bidders are purely interpretive and altogether speculative. Further, the Department does not in any way guarantee, either expressly or by implication, the sufficiency of the information for bid purposes.

The boring logs are made available to bidders in order that they may have access to subsurface data identical to that which is possessed by the Department, and are not intended as a substitute for personal investigation, interpretation and judgment by the bidders.

PRELIMINARY PLANS

THESE PLANS NOT TO BE USED FOR CONSTRUCTION

048

Dewberry

Dewberry Engineers Inc.
8401 ARLINGTON BLVD.
FAIRFAX, VA 22031
PHONE: 703.849.0100
FAX: 703.849.0518

HARTLAND DRIVE OVER BROAD RUN TRIBUTARY
LOUDOUN COUNTY
CPAP-2020-0009

SEAL

A copy of the original signed geotechnical submittal is on file in the District Office.

No.	DATE	BY	Description

REVISIONS

DESIGNED BY TPV
DRAWN BY JPD
CHECKED BY PCA
DATE APRIL 2020

TITLE

ENGINEERING GEOLOGY - 12

PROJECT NO. 50113885

XXX-XX

SHEET NO. 48 of 49

Received by VMRC September 1, 2020 /blh

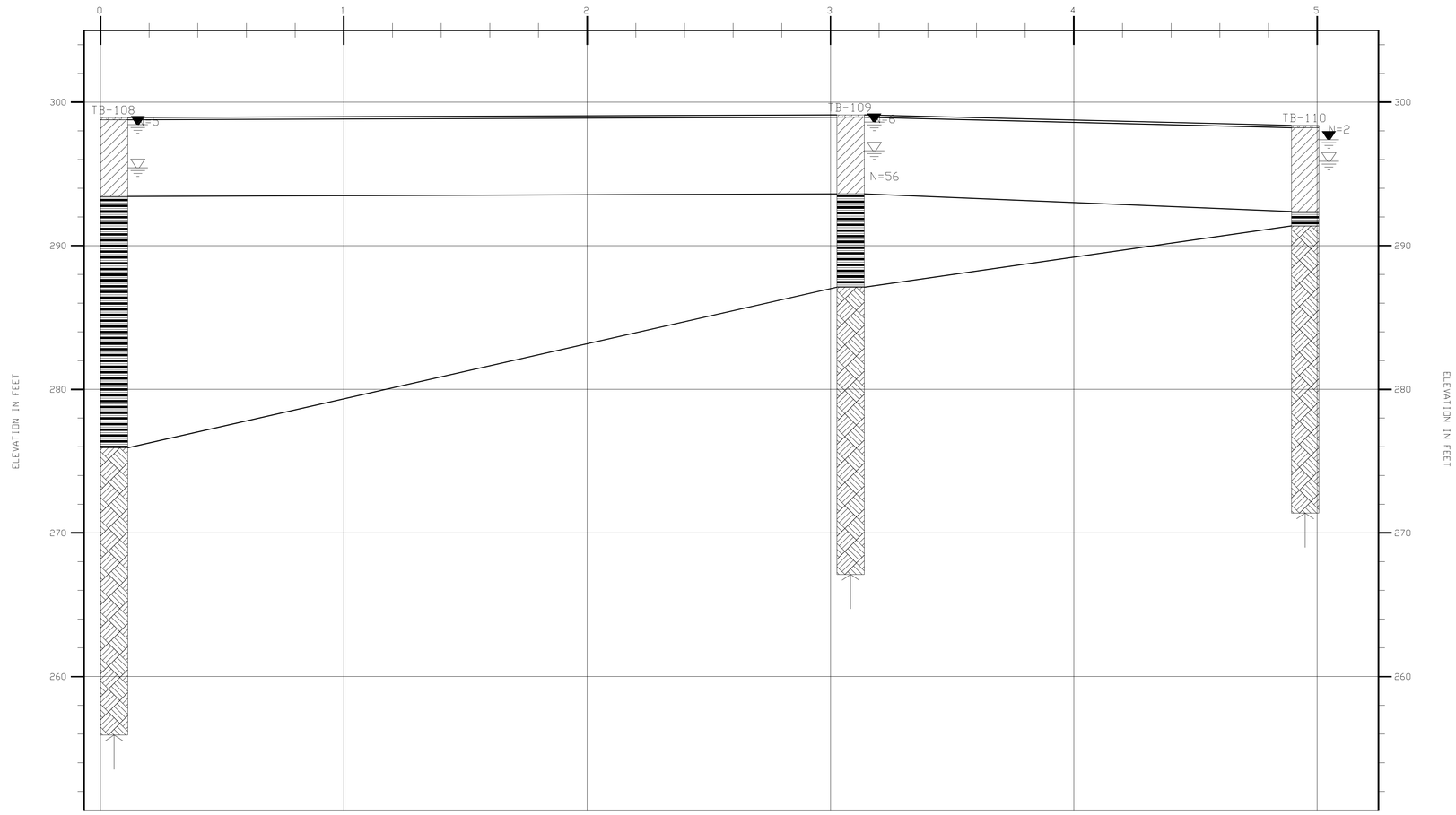

Strata symbols

- Topsoil
- Low plasticity clay
- Weathered Rock
- Bedrock

The subsurface information shown on the boring logs in these plans was obtained with reasonable care and recorded in good faith solely for use by the Department in establishing design controls for the project. The Department has no reason to suspect that such information is not reasonably accurate as an approximate indication of the subsurface conditions at the sites where the borings were taken. The Department does not in any way warrant or guarantee that such data can be projected as indicative of conditions beyond the limits of the borings shown; and any such projections by bidders are purely interpretive and altogether speculative. Further, the Department does not in any way guarantee, either expressly or by implication, the sufficiency of the information for bid purposes.

The boring logs are made available to bidders in order that they may have access to subsurface data identical to that which is possessed by the Department, and are not intended as a substitute for personal investigation, interpretation and judgment by the bidders.

PRELIMINARY PLANS

THESE PLANS NOT TO BE USED FOR CONSTRUCTION

049

Dewberry

Dewberry Engineers Inc.
8401 ARLINGTON BLVD.
FAIRFAX, VA 22031
PHONE: 703.849.0100
FAX: 703.849.0518

HARTLAND DRIVE OVER BROAD RUN TRIBUTARY

LOUDOUN COUNTY

CPAP-2020-0009

SEAL

A copy of the original signed geotechnical submittal is on file in the District Office.

No.	DATE	BY	Description

REVISIONS

DESIGNED BY	TPV
DRAWN BY	JPD
CHECKED BY	PCA
DATE	APRIL 2020

TITLE

ENGINEERING GEOLOGY - 13

PROJECT NO. 50113885

XXX-XX

SHEET NO. 49 of 49

Received by VMRC September 1, 2020 /blh

Timber Ridge at Hartland
South Bridge Scour Report

04/06/2020

Prepared By:

Dewberry

Prepared for:

HARTLAND
VIRGINIA

VDOT Virginia Department of Transportation

COMMONWEALTH OF VIRGINIA
JAMES C. FILSON, II
Lic. No. 030714
4/8/2020
PROFESSIONAL ENGINEER

Received by VMRC September 1, 2020 /blh

Table of Contents

Introduction 2
Bridge Scour Components 4
Long–term Scour and Stream Stability 4
Geotechnical Investigations and Data 6
Potential Scour Calculations 8
Contraction Scour 9
Abutment Scour 9
Recommended Foundation Elevations 10
References 14

Appendix A- Geotechnical Data 15
Appendix B-Detailed Scour Calculations 36

Received by VMRC September 1, 2020 /blh

Introduction

This report summarizes the bridge scour analysis for the proposed South Bridge over Tributary 1 North Fork Broad Run. This bridge is planned in conjunction with the Timber Ridge at Hartland Development project. The project site is in Loudoun County and the property is located West of Fleetwood Road. A hydraulic study is included in Loudoun County Floodplain Alteration Study (FPAL) already submitted by Dewberry to Loudoun County for review and approval. Please refer to FPAL-2020-0003 for details of hydraulic modeling. Also, a CLOMR package has been submitted to FEMA. Two new bridges are proposed as part of this development, one over North Fork Broad Run ("North Bridge") and the other over Tributary 1 to North Fork Broad Run ("South Bridge"). Figure 1 shows the project location and the location of the proposed new roadway and bridges. This report summarizes the scour analysis for the South Bridge. The scour analysis for the North Bridge is included in a separate report.

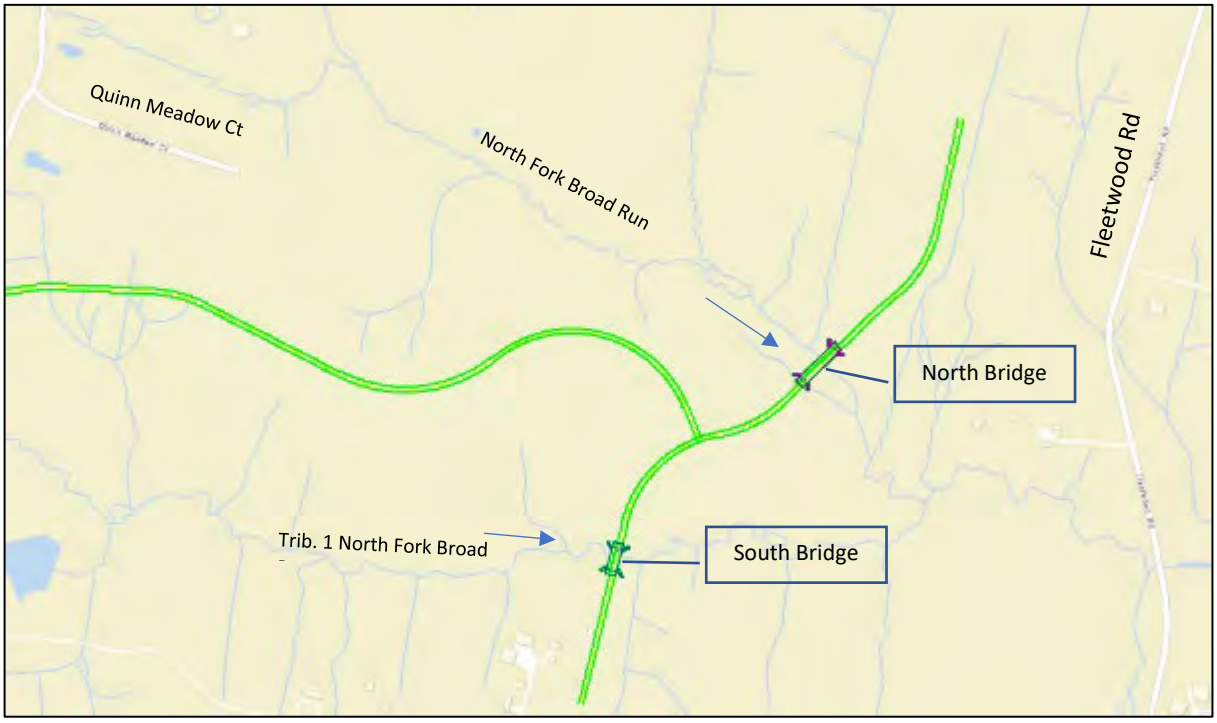

Figure 1. Project Area showing Location of the Proposed Roadway and Bridges in Loudoun County.

The hydraulic model for the proposed condition was developed in HEC-RAS Version 5.0.1 during the floodplain alteration analysis. Figure 2 shows the HEC-RAS bridge section on the upstream side showing both the 100-year and the 500-year water surface elevations. As seen in Figure 2 both the 100- and 500-year discharges pass under the bridge with no roadway overtopping. Both the 100- and 500-year scour values are calculated in this study. However, because the 500-year flow depths and velocities are considerably larger than the 100-year values, the 500-year profile would be used for design purposes. This is consistent with structural stability requirements to consider the 500-year scour or extreme floods. Figure 3 shows the HEC-RAS stream and cross sections around the Proposed Bridge.

Received by VMRC September 1, 2020 /blh

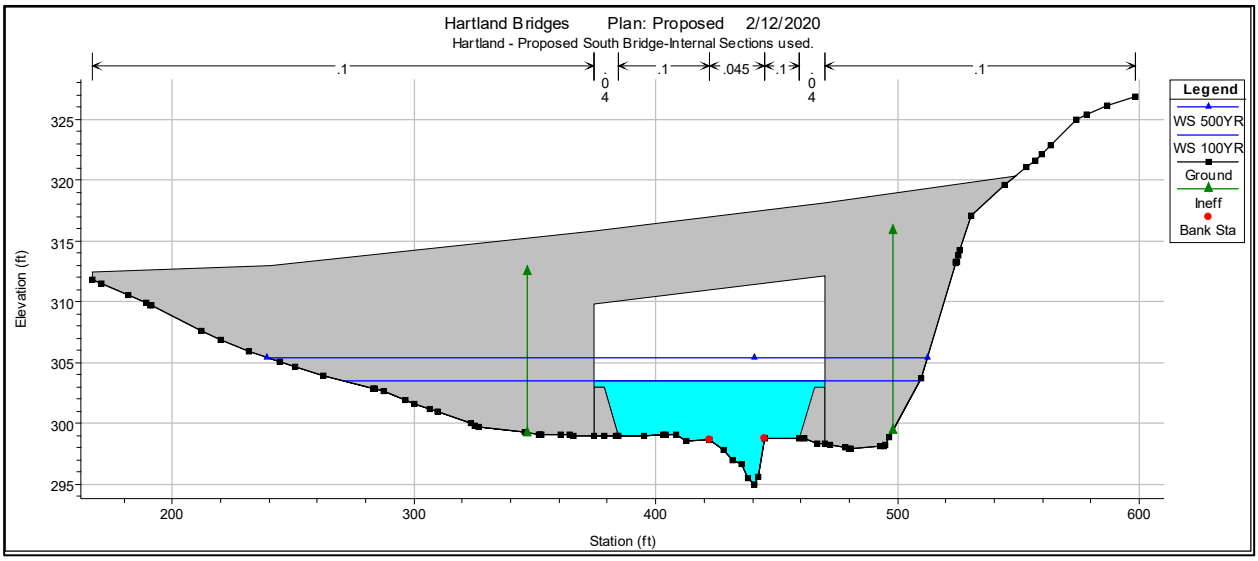

Figure 2. HEC-RAS Bridge Section on Upstream Side with 100- and 500-year WSEs.

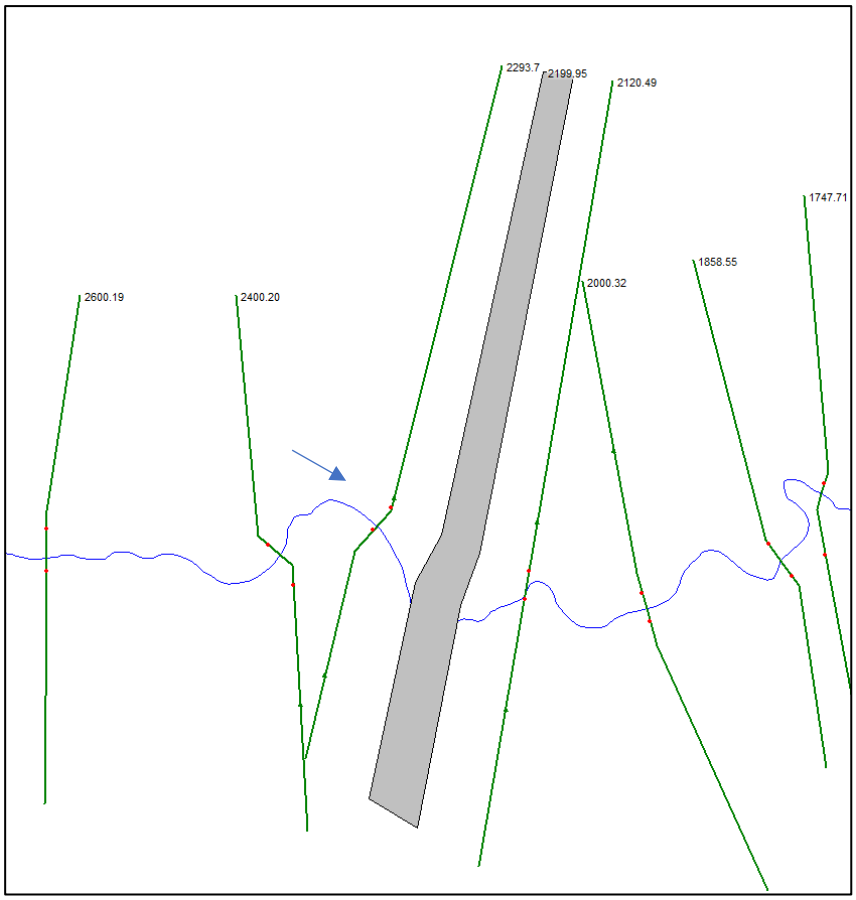

Figure 3. HEC-RAS Geometry Around Proposed Bridge.

Received by VMRC September 1, 2020 /blh

Bridge Scour Components

The total bridge scour depth is the sum of scour components: long-term aggradation or degradation, contraction scour and local scour at abutments (this bridge has no pier). Each of the scour components were evaluated as described in the following sections.

Long–term Scour and Stream Stability

Long-term scour may consist of aggradation or degradation causing a rise or fall of the streambed elevation, respectively. Field observations do not point to evidence of long-term aggradation or degradation or significant bank erosion at the location of the proposed crossing. Therefore, the long-term scour was assumed to be negligible in this case.

The stream stability indicators were evaluated according to the procedure outlined in HEC-20 Tables 5.5 and 5.6. Figure 4 shows the aerial image of the site and the stream path and Table 1 shows the calculations for the stream stability evaluation. The stream stability evaluation results in Table 1 indicated an overall score of 55 which for this type of stream (pool-riffle and plane-bed channel) indicates the "Good" category assigned to all cases with a score of 49 to 85. Also, the vertical and horizontal stability ratios are 0.25 and 0.36, respectively indicating a relatively stable stream. The potential for the channel thalweg shifting (migration) and impacting either abutment is low. However, there is a stream bend approximately 105' upstream of the proposed bridge (see Figure 4). The concern is that if this bend continues to shift in downstream direction it could impact the left abutment looking downstream by relocating the main channel to directly face the abutment. To assess this possibility aerial photos from Google Earth for the years 1989, 2002, 2014, and 2018 were analyzed. No appreciable shift or movement of the bend location was detected from these aerial images. Thus, it was assumed the bend will be stable in the future and no special consideration is needed for the scour analysis.

Received by VMRC September 1, 2020 /blh

Figure 4. Aerial Image of the Site showing Stream Path and Footprint of Proposed Bridge.

Table 1. Stream Stability Evaluation.

HEC-20 Table 5.5 stability indicator scores			
Stability Indicator No.	Rating	Score	Notes
1	Fair	7	Urbanization in future
2	Excellent	3	second order stream.
3	Fair	7	Meandering
4	Excellent	2	
5	Good	5	
6	Excellent	2	
7	Excellent	3	boulders
8	Good	5	SB 2 to 4 soils are silt loam, slity clay and loam
9	Good	5	bank slope<3H:1V on left but larger on right
10	Good	5	
11	Excellent	2	
12	Excellent	2	
13	Fair	7	Bend about 105' u/s and bridge not aligned with flow
	sum=	**55**	**Between 49 to 85, Good**
Vertical Stability			
Sum of No.s 4-6=	9		
Max of Nos. 4-6 =	36		
Ratio=	**0.25**	**very low**	
Horizontal Stability			
Sum of No.s 8-13=	26		
Max of Nos. 8-13 =	72		
Ratio=	**0.36**	**low**	

Received by VMRC September 1, 2020 /blh

Geotechnical Investigations and Data

The geotechnical field investigations for this project were conducted by Geotechnical Solutions, Inc. and the results were summarized in a report entitled "Subsurface Exploration and Geotechnical Recommendations, (Geotechnical Solutions Inc., 2020). Selected pages from the geotechnical engineering report are given in Appendix A including boring logs and the results for particle size distribution tests. These borings provide detailed logs of the soil and rock including the Rock Quality Designation (RQD) that would indicate whether a non-scourable layer exists at that location. Generally, formations with RQD values larger than 50% are considered resistant to scour. In this case, Geotechnical Solutions Inc. (2020) identified rock in Stratum IV which was encountered at auger refusal depths at each NB-series and SB-series borings. They evaluated Rock Erodibility Index for the siltstone rock of Stratum IV for both the North and South bridges. Section 4.7 of Geotechnical Solutions Inc. (2020) which includes this evaluation can be found at the end of Appendix A. Based on this evaluation, Geotechnical Solutions Inc. (2020) expressed their professional opinion that "the rock of Stratum IV is highly resistant to scour". Therefore, regardless of the RQD value, the formation below the top elevation of the rock in Stratum IV may be considered as non-scourable.

Figure 5 shows the location of the borings at and near the proposed bridge structure. The main observations from all relevant borings (depth to and elevation of the scour-resistant Stratum IV and layer with RQD>50%) are summarized in Table 2. In every case, the RQD>50% layer is the same as Stratum IV because the top section of Stratum VI had an RQD>50%. Also, more than one elevation to Stratum IV or RQD>50% layer is available at each abutment. For design purposes, at each structure the lowest scour-resistant elevation was selected as shown in bold numbers in Table 2. Table 2 also gives the available D_{50} values at each location. All selected D_{50} values are finer than 0.2 mm. Per HEC-18 guidance several scour calculations use a minimum D_{50} of 0.2 mm.

Received by VMRC September 1, 2020 /blh

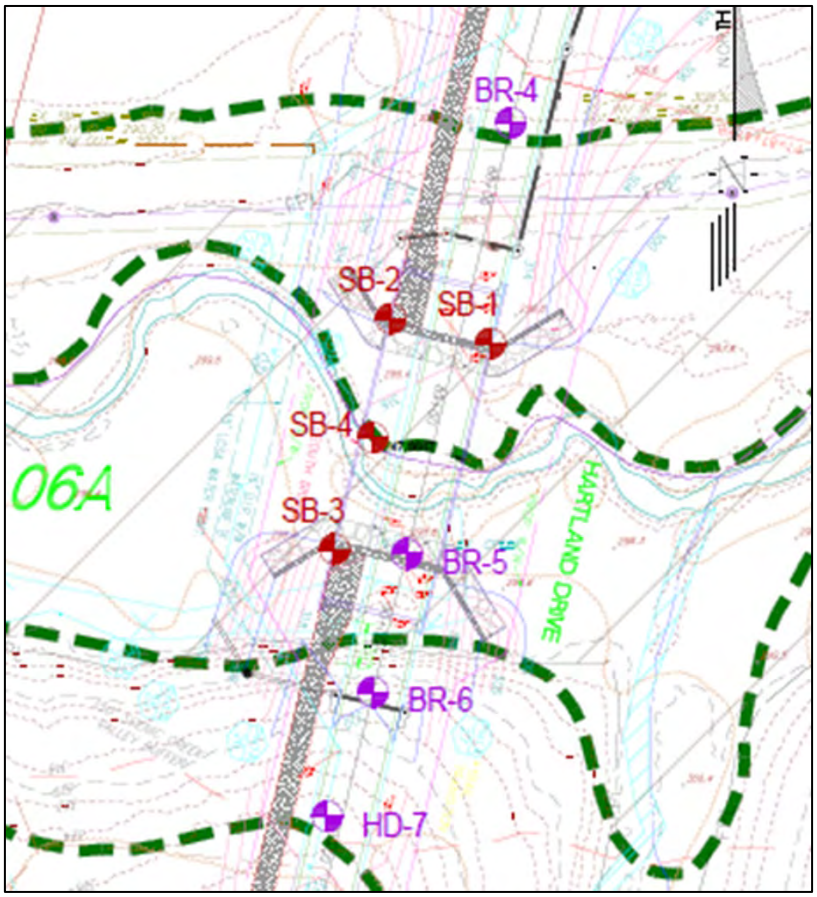

Figure 5. Boring Locations at or near proposed Bridge.

Table 2. Boring Data and Selected Non-scourable Layer Elevations.

Boring	Location	GSE	Depth to Stratum IV	Elev. of Stratum IV	Depth to RQD>50 %	Elev. of RQD>50 %	RQD	D50 (mm)
SB-1	d/s of L Abut	298.78	18	280.78	18	280.78	84.2	0.103
SB-2	u/s of L Abut	299.47	13.6	285.87	13.6	285.87	62.5	0.0223
Non-scourable elevation at L Abut. Set based on SB-1=				***280.78***				
SB-3	u/s of R Abut	298.73	13.7	285.03	13.7	285.03	93.1	0.0054
BR-5	under Bridge near R Abut	299.04	35	264.04	35	264.04	78.8	
Non-scourable elevation at R Abut. Set based on BR-5=				***264.04***				
SB-4	Channel u/s of Bridge	298.81	4	294.81	4	***294.81***	62.3	0.0283

Received by VMRC September 1, 2020 /blh

Potential Scour Calculations

All scour calculations in this report were performed following the procedures and equations outlined in Federal Highway Administration's HEC-18 (Fifth Ed., April 2012). The hydraulic parameters required for the scour calculations were taken from the proposed conditions HEC-RAS model. Tables 3 and 4 summarizes the 100- and 500-year potential scour depth results, respectively.

Table 3. Summary of 100-year Potential Scour Depths.

Type of Scour	Location	Depth (ft)
Long-Term	Cross Section	0.0
Contraction	Main Channel	5.4
Contraction	LOB (looking d/s)	4.7
Contraction	ROB (looking d/s)	2.4
Pressure Flow	under bridge opening	Not calculated
Abutment (Potential Scour)	Abut. A (Left Abut. looking d/s)	10.7
Total Scour at Abutment	Abut. A (Left Abut. looking d/s)	10.7
Abutment (Potential Scour)	Abut. B (Right Abut. looking d/s)	7.6
Total Scour at Abutment	Abut. B (Right Abut. looking d/s)	7.6

Notes: Contraction scour type selected for channel is: Live-bed; for LOB is: Live-bed; for ROB is: Live-bed,
Bridge has no piers. Pressure flow does not apply. LOB by Live Bed since it gave slightly larger depth.
Left Abut. Scour is calculated by NCHRP 24-20, therefi contraction scour is not added to it to get the total scour.
Right Abut. Scour is calculated by NCHRP 24-20, theref contraction scour is not added to it to get the total scour.

Table 4. Summary of 500-year Potential Scour Depths.

Type of Scour	Location	Depth (ft)
Long-Term	Cross Section	0.0
Contraction	Main Channel	7.0
Contraction	LOB (looking d/s)	7.2
Contraction	ROB (looking d/s)	4.2
Pressure Flow	under bridge opening	Not calculated
Abutment (Potential Scour)	Abut. A (Left Abut. looking d/s)	16.1
Total Scour at Abutment	Abut. A (Left Abut. looking d/s)	16.1
Abutment (Potential Scour)	Abut. B (Right Abut. looking d/s)	11.4
Total Scour at Abutment	Abut. B (Right Abut. looking d/s)	11.4

Notes: Contraction scour type selected for channel is: Live-bed; for LOB is: Live-bed; for ROB is: Live-bed,
Bridge has no piers. Pressure flow does not apply.
Left Abut. Scour is calculated by NCHRP 24-20, therefi contraction scour is not added to it to get the total scour.
Right Abut. Scour is calculated by NCHRP 24-20, theref contraction scour is not added to it to get the total scour.

Received by VMRC September 1, 2020 /blh

Note that following the HEC-RAS model orientation, the left and right overbanks and structures in Tables 3 and 4 are orientated looking downstream. At this crossing, the stream flows West to East. The left abutment looking downstream (on North side of the bridge) is labeled as Abutment A in bridge plans. The right abutment looking downstream (on South side of the bridge) is labeled as Abutment B in bridge plans.

The scour evaluation for each scour component is explained below.

Contraction Scour

The proposed bridge abutments will both be set-back from the channel. Therefore, contraction scour is required to be calculated for the main channel as well as the left and right overbanks. To determine if the prevailing flow velocity and depth would cause Live Bed or Clear Water contraction scour, the value of the median bed material particle size (D_{50}) needs to be used. The D_{50} values shown in Table 2 in combination with hydraulic parameters from HEC-RAS allowed the evaluation of the critical velocity required to detach and suspend the material in the flood flow. For the 100-year profile, flow velocity at the main channel and the right overbank will exceed the value of the critical velocity. Therefore, the contraction scour for the main channel and the right overbank was evaluated using Live Bed Equation in HEC-18. Clear Water Equation gave a scour depth of 4.56' for the left overbank contraction scour. However, the calculated flow velocity for left overbank was only slightly smaller than the critical velocity. Live Bed Equation produced a slightly higher value (4.74') and was selected for the results table to be conservative. The 500-year flow velocity at the main channel and both overbanks will exceed the value of the critical velocity. Therefore, the contraction scour for the main channel and each overbank was evaluated using Live Bed Equation in HEC-18 for the 500-year profile. Table 3 and 4 show the results of the contraction scour for the 100- and 500-year profiles, respectively. Details of contraction scour calculations are provided in Appendix B.

Abutment Scour

As seen in Figure 2, the abutments would partially block both the 100-year and the 500-year peak discharges. Therefore, we need to evaluate the abutment scour depth at each abutment. The abutment scour was evaluated by the NCHRP 24-20 Equations which are a set of equations introduced in the Fifth Ed. of HEC-18 published in 2012. These equations treat abutment scour as amplified contraction scour and do not require overbank contraction scour depths to be added to the abutment scour depths. There are two other abutment scour equations in HEC-18 (Froehlich and HIRE) but the NCHRP 24-20 Equations are newer and more rigorous than the two older equations and are the preferred method if they provide reasonable scour values for the subject bridge. All detailed abutment scour calculations can be found in Appendix B. Because the abutment scour depths in Tables 3 and 4 were estimated using the NCHRP 24-20 Equations there is no need to add contraction scour to them to get the total scour depths. Therefore, the total potential 100-year scour depth at left abutment (Abutment A) is 10.7' and at right abutment (Abutment B) is 7.6'. The total potential 500-year scour depth at left abutment (Abutment A) is 16.1' and at right abutment (Abutment B) is 11.4'.

Received by VMRC September 1, 2020 /blh

Recommended Foundation Elevations

Tables 5 and 6 summarize the potential scour depths and bottom elevations for the 100-year and 500-year profiles, respectively. Tables 5 and 6 also include the approximate elevation of the Scour-resistant (non-scourable rock from Table 2) at each location. The elevations given in the fifth column of these tables represent the lowest elevation of unrestricted potential scour. When the elevation of the non-scourable rock is higher than the potential scour elevation, the scour depth will be limited by the non-scourable rock layer.

Table 5. 100-year Potential Scour Depths and Elevation and the Scour-safe Elevations.

Design Discharge Return Period (Tr): 100-Year							
Ground Surface Elev. (ft)	Contraction or Pressure Flow Scour (ft)	Abutment or pier Scour Depth (ft)	Total Scour Depth (ft)	Lowest El. of Unrestricted Potential Scour (ft)	Approx. Scour Resistant El. (ft)	**Scour-safe Foundation El. (ft)**	Note
Abut. A (Left Abut. looking d/s)							
303.00	4.7	10.7	10.7	292.3	280.8	**292.3**	Scour Not limited by bedrock
Abut. B (Right Abut. looking d/s)							
303.00	2.4	7.6	7.6	295.4	264.0	**295.4**	Scour Not limited by bedrock

Ground Surface Elevation at each abutment taken from top of riprap.
Left Abut. Scour is calculated by NCHRP 24-20, therefore contraction scc contraction scour is not added to it to get the total scour.
Right Abut. Scour is calculated by NCHRP 24-20, therefore contraction scour is not added to it to get the total scour.

Table 6. 500-year Potential Scour Depths and Elevation and the Scour-safe Elevations

Design Discharge Return Period (Tr): 500-Year							
Ground Surface Elev. (ft)	Contraction or Pressure Flow Scour (ft)	Abutment or pier Scour Depth (ft)	Total Scour Depth (ft)	Lowest El. of Unrestricted Potential Scour (ft)	Approx. Scour Resistant El. (ft)	**Scour-safe Foundation El. (ft)**	Note
Abut. A (Left Abut. looking d/s)							
303.00	7.2	16.1	16.1	286.9	280.8	**286.9**	Scour Not limited by bedrock
Abut. B (Right Abut. looking d/s)							
303.00	4.2	11.4	11.4	291.6	264.0	**291.6**	Scour Not limited by bedrock

Ground Surface Elevation at each abutment taken from top of riprap.
Left Abut. Scour is calculated by NCHRP 24-20, therefore contraction scc contraction scour is not added to it to get the total scour.
Right Abut. Scour is calculated by NCHRP 24-20, therefore contraction scour is not added to it to get the total scour.

At each abutment the non-scourable layer elevation used in Tables 5 and 6 are the lower of the two elevations recorded along each abutment location as designed. The scour safe foundation elevations are given as the higher elevation between columns 5 and 6. For both abutments the notes indicate the bottom of scour elevation is not restricted by bedrock.

Figures 6 and 7 are the scour plots for the 100- and 500-year profiles, respectively. The orientation in Figures 6 and 7 is looking downstream and all elevations in the scour plots are in NAVD 88 vertical datum. The ground surface elevations shown in Figures 6 and 7 are from the HEC-RAS internal bridge section on upstream side. The ground surface elevations in the first column of Tables 5 and 6 refer to the top elevation of Class I riprap. The 500-year scour depths are larger than the 100-year values. Therefore, the 500-year profile is used for deciding which foundation elevation is safe against scour. The

Received by VMRC September 1, 2020 /blh

abutment lowest foundation elevations shown in Figure 7 correspond to the scour-safe elevations summarized in Table 6 for the 500-year profile.

Based on the 500-year scour results in Table 6 and Figure 7 the following summarizes foundation elevation recommendations for the proposed bridge:

Abutment A (Left Abutment Looking downstream)

The scour-safe foundation elevation is approximately at 286.9' based on the expectation that non-scourable rock will not be encountered above this elevation. If during the construction of this abutment the non-scourable rock is observed at a higher elevation the foundation may be adjusted to that elevation. This determination must be documented and approved by the project geotechnical engineer.

Abutment B (Right Abutment Looking downstream)

The scour-safe foundation elevation is approximately at 291.6' based on the expectation that non-scourable rock will not be encountered above this elevation. If during the construction of this abutment the non-scourable rock is observed at a higher elevation the foundation may be adjusted to that elevation. This determination must be documented and approved by the project geotechnical engineer.

When the bridge foundations are constructed as recommended above there will be no need for scour countermeasures to protect the abutments against scour. However, Riprap Class I will be provided at abutment slopes to provide slope protection but is not considered a scour countermeasure.

Received by VMRC September 1, 2020 /blh

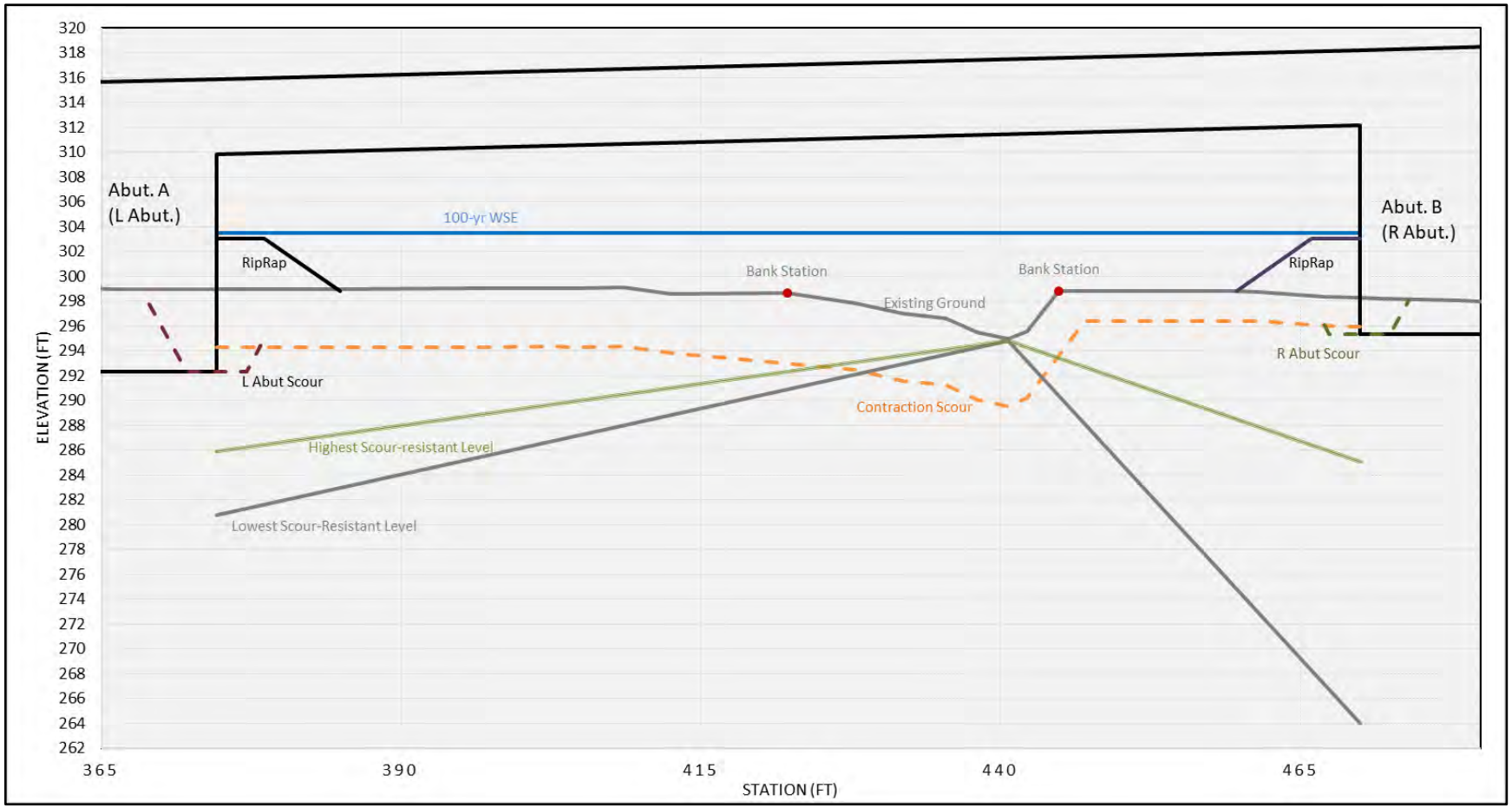

Figure 6. 100-year Scour Plot.

Received by VMRC September 1, 2020 /blh

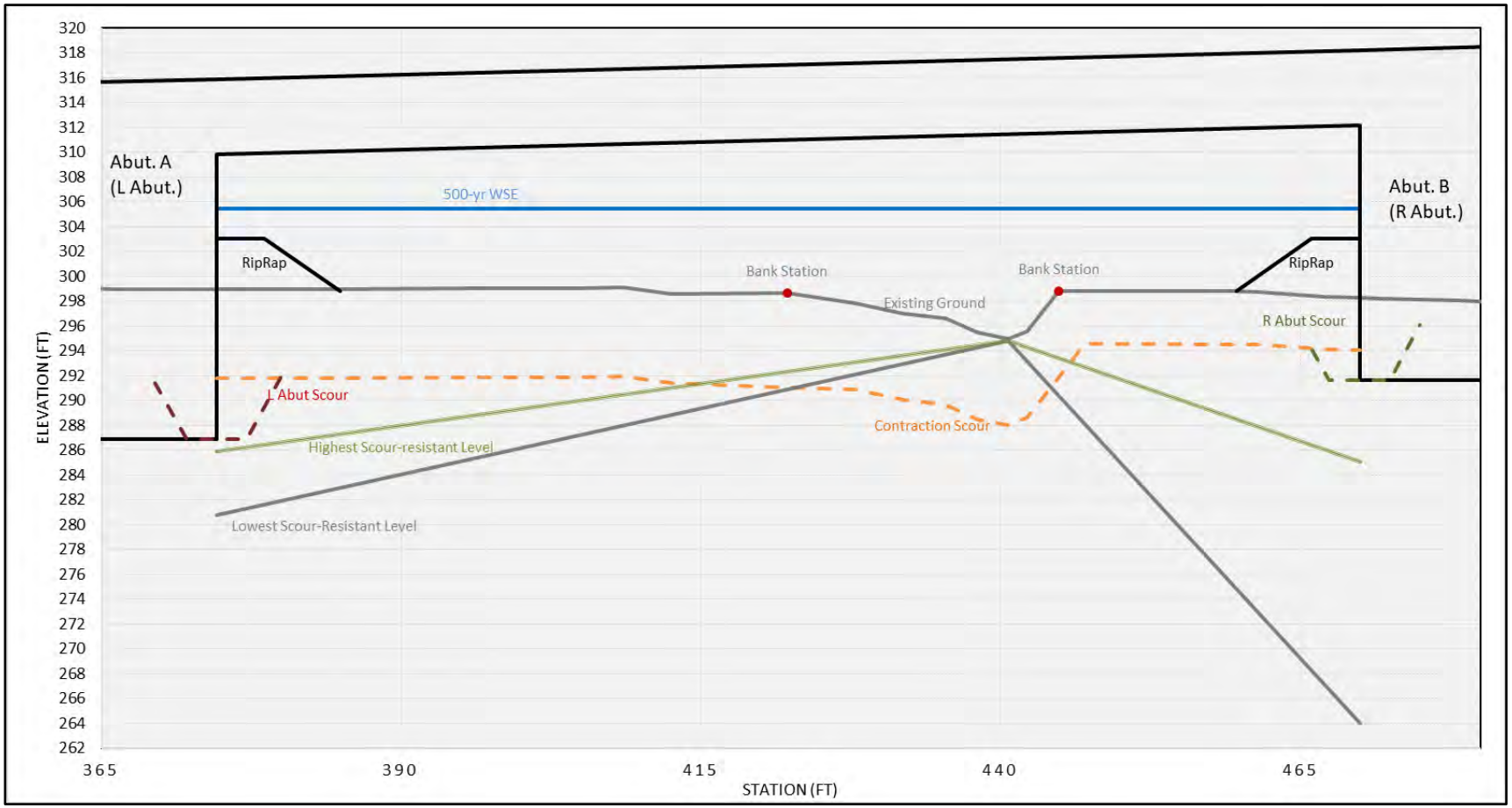

Figure 7. 500-year Scour Plot.

Received by VMRC September 1, 2020 /blh

References

FPAL-2020-0003, (2020) “Floodplain Alteration, Hartland North Fork Broad Run”, Submitted by Dewberry to Loudoun County.

Geotechnical Solutions Inc, (2020), “Subsurface Exploration and Geotechnical Recommendations”, Hartland Drive Public Improvements- Phase 1A and 1B, Loudoun County Virginia, December 23, 2019, Revised March 26, 2020.

HEC-18, “Evaluating Scour at Bridges”, Fifth Edition, Publication No. FHWA-HIF-12-003, Hydraulic Engineering Circular No. 18, Federal Highway Administration, U.S. Department of Transportation, April 2012.

Received by VMRC September 1, 2020 /blh

Appendix – A

Geotechical Data

Received by VMRC September 1, 2020 /blh

Geotechnical Solutions, Inc.

www.geotechnical-solutions.com

PROJECT: Hartland Drive Bridges **PROJECT NO.:** GP-192603-A
CLIENT: Timber Ridge at Hartland, LLC **BORING NO.:** SB-1
PROJECT LOCATION: Loudoun County, VA
LOCATION: South Bridge - North Abutment **ELEVATION:** 298.78 ft. MSL
DRILLER: Recon Drilling, Inc, (C. Gudiel) **LOGGED BY:** J. Kline
DRILLING METHOD: 3.25" I.D. HSA w/Autohammer & NQ Core Bit (Diedrich **DATE:** 11/07/2019
DEPTH TO - WATER> INITIAL: 3 ft. **AFTER 24 HOURS:** 3 ft. **CAVING>** C 4.5
GRID COORDINATES: N 7035998.29 **E** 11745856.45

This information pertains only to this boring and should not be interpreted as being indicitive of the site.

Depth/Elevation (feet)	Graphic	Description	USCS Class.	Sample No.	Blow Counts	Recovery (in.)	Moisture Content (%)	Liquid Limit	Plasticity Index	%<#200
0 / 297.5		3 inches of TOPSOIL (0.25)	TOPS							
		Alluvium - Brown CLAYEY SAND WITH GRAVEL, loose, moist	CL	S1	1 3 2 3	21	24.7			
2.5 / 295				S2	2 1 3 9	20	20.8	29	9	47.1
		Residual - Red-brown SANDY LEAN CLAY, contains siltstone fragments, medium stiff, moist (3.5)	CL	S3	12 31 50/2"	10	10.5			
5 / 292.5		IGM - Highly weathered, moderately hard, medium bedded red-brown SILTSTONE (5.0)	IGM	S4	50/5"	1	3.9			
7.5 / 290				S5	50/2"	2	4.3			
10 / 287.5										
12.5 / 285				S6	50/2"	2	5.5			
15 / 282.5										

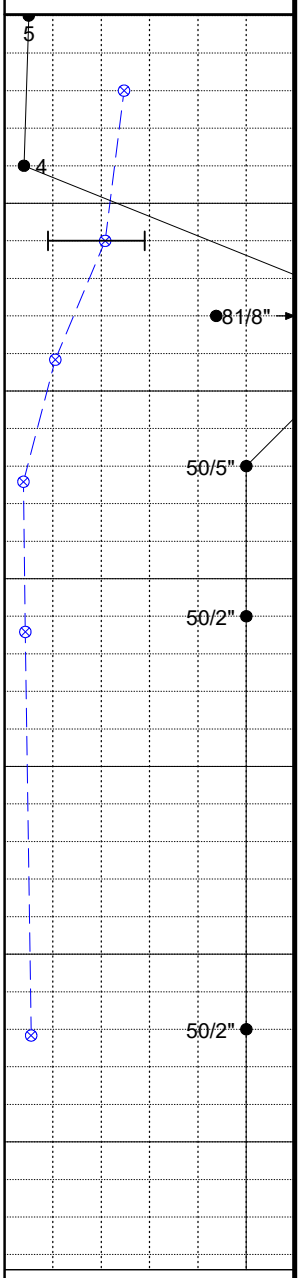

Boring backfilled after 24 hour water level observation.

Received by VMRC September 1, 2020 /blh

Geotechnical Solutions, Inc.

www.geotechnical-solutions.com

PROJECT: Hartland Drive Bridges **PROJECT NO.:** GP-192603-A
CLIENT: Timber Ridge at Hartland, LLC **BORING NO.:** SB-1
PROJECT LOCATION: Loudoun County, VA
LOCATION: South Bridge - North Abutment **ELEVATION:** 298.78 ft. MSL
DRILLER: Recon Drilling, Inc, (C. Gudiel) **LOGGED BY:** J. Kline
DRILLING METHOD: 3.25" I.D. HSA w/Autohammer & NQ Core Bit (Diedrich **DATE:** 11/07/2019
DEPTH TO - WATER> INITIAL: 3 ft. **AFTER 24 HOURS:** 3 ft. **CAVING>** C 4.5
GRID COORDINATES: N 7035998.29 **E** 11745856.45

This information pertains only to this boring and should not be interpreted as being indicitive of the site.

Depth/Elevation (feet)	Graphic	Description	USCS Class.	Sample No.	Blow Counts	Recovery (in.)	Moisture Content (%)	Liquid Limit	Plasticity Index	%<#200	PI — LL; Water Content - ⊗; Penetration - ● (10 20 30 40 50)
17.5 / 280		18.0	ROCK	S7	50/0"	NR					50/0"
20 / 277.5		Slightly weathered, moderately hard, thin-bedded reddish brown argillaceous indurated and interbedded SILTSTONE and SANDSTONE, highly to intensely fractured, slightly rough, with <0.2 in. separation, hard wall rock, continuous at moderate to high angle, highly to intensely jointed, slightly rough with <0.2 in. separation, hard wall rock, continuous at low to moderate angle Mud seam from 20.1 to 20.8 feet Core Run Length - 5 feet Recovery = 84.2% RQD = 84.2 = Good Quality		R1		51					
22.5 / 275		23.0									
		24.45-25.25 ft. - Rock Unconfined Compressive Strength - 6,720 psi									
25 / 272.5		Slightly weathered, moderately hard, thin-bedded reddish brown argillaceous indurated, interbedded and vuggy SILTSTONE and SANDSTONE, moderately to highly fractured, slightly rough, with <0.05 in. separation, hard wall rock, continuous at moderate to high angle, moderately to highly jointed, slightly rough with no separation, hard wall rock, continuous at low to moderate angle Core Run Length - 5 feet Recovery = 100.0% RQD = 90.6 = Excellent Quality		R2		60					
27.5 / 270		28.0									
30 / 267.5		Slightly weathered, moderately hard, thin-bedded reddish brown argillaceous indurated, cross-bedded and interbedded SILTSTONE and SANDSTONE, moderately to intensely fractured, slightly rough, with <0.2 in. separation, hard wall		R3		60					
32.5											

Boring backfilled after 24 hour water level observation.

Received by VMRC September 1, 2020 /blh

Geotechnical Solutions, Inc.

www.geotechnical-solutions.com

PROJECT: Hartland Drive Bridges **PROJECT NO.:** GP-192603-A
CLIENT: Timber Ridge at Hartland, LLC **BORING NO.:** SB-1
PROJECT LOCATION: Loudoun County, VA
LOCATION: South Bridge - North Abutment **ELEVATION:** 298.78 ft. MSL
DRILLER: Recon Drilling, Inc, (C. Gudiel) **LOGGED BY:** J. Kline
DRILLING METHOD: 3.25" I.D. HSA w/Autohammer & NQ Core Bit (Diedrich **DATE:** 11/07/2019
DEPTH TO - WATER> INITIAL: 3 ft. **AFTER 24 HOURS:** 3 ft. **CAVING>** 4.5
GRID COORDINATES: N 7035998.29 **E** 11745856.45

This information pertains only to this boring and should not be interpreted as being indicitive of the site.

Depth/Elevation (feet)	Graphic	Description	USCS Class.	Sample No.	Blow Counts	Recovery (in.)	Moisture Content (%)	Liquid Limit	Plasticity Index	%<#200	PI — LL; Water Content - ⊗; Penetration - ● (10 20 30 40 50)
265		rock, continuous at moderate to high angle, moderately to intensely jointed, slightly rough with <0.2 in. separation, hard wall rock, continuous at low to moderate angle Core Run Length - 5 feet Recovery = 100.0% RQD = 92.3 = Excellent Quality		R4		60					
35		33.0									
262.5		Slightly weathered, moderately hard, thin-bedded reddish brown argillaceous indurated, cross-bedded and interbedded SILTSTONE and SANDSTONE, moderately to intensely fractured, slightly rough, with <0.2 in. separation, hard wall rock, continuous at moderate to high angle, moderately to intensely jointed, slightly rough with <0.2 in. separation, hard wall rock, continuous at low to moderate angle Core Run Length - 5 feet Recovery = 100.0% RQD = 89.8 = Good Quality									
37.5											
260											
40											
257.5											
42.5		Auger refusal at 18 feet. Rock core terminated at 33 feet.									
255											
45											
252.5											
47.5											
250											
50											

Boring backfilled after 24 hour water level observation.

Received by VMRC September 1, 2020 /blh

Geotechnical Solutions, Inc.

www.geotechnical-solutions.com

PROJECT: Hartland Drive Bridges **PROJECT NO.:** GP-192603-A
CLIENT: Timber Ridge at Hartland, LLC **BORING NO.:** SB-2
PROJECT LOCATION: Loudoun County, VA
LOCATION: South Bridge - North Abutment **ELEVATION:** 299.47 ft. MSL
DRILLER: Recon Drilling, Inc, (C. Gudiel) **LOGGED BY:** J. Kline
DRILLING METHOD: 3.25" I.D. HSA w/Autohammer & NQ Core Bit (Diedrich **DATE:** 11/08/2019
DEPTH TO - WATER> INITIAL: ▽ 10 ft. **AFTER 24 HOURS:** ▼ 10 ft. **CAVING>** C 12 ft.
GRID COORDINATES: N 7036009.31 **E** 11745812.39

This information pertains only to this boring and should not be interpreted as being indicitive of the site.

Depth/Elevation (feet)	Graphic	Description	USCS Class.	Sample No.	Blow Counts	Recovery (in.)	Moisture Content (%)	Liquid Limit	Plasticity Index	%<#200
0 / 297.5		3 inches of TOPSOIL	TOPS	Bulk			27.2	40	19	71.9
		0.25 Alluvium - Brown SANDY LEAN CLAY, soft moist,	CL	S1	2 2 3 2	24	23.3			
2.5 / 295		2.5 Residual - Red-brown SANDY LEAN CLAY, contains siltstone fragments, medium stiff, moist	CL	S2	2 7 14 19	24	11.4			
5 / 292.5		5.0 IGM - Highly weathered, moderately hard, medium bedded red-brown SILTSTONE	IGM	S3	9 18 30 50	24	8.8			
				S4	50/2"	1	3.8			
7.5				S5	50/1"	1	4.0			
10 / 290										
12.5 / 287.5										
15 / 285		13.6 Slightly weathered, moderately hard, thin-bedded reddish brown argillaceous indurated and interbedded SILTSTONE and SANDSTONE, highly fractured, slightly rough, with <0.05 in. separation, hard wall rock,	ROCK	S6	50/1"	NR				
				R1		50				

13.9-14.7 ft. - Rock Unconfined Compressive Strength - 8,890 psi

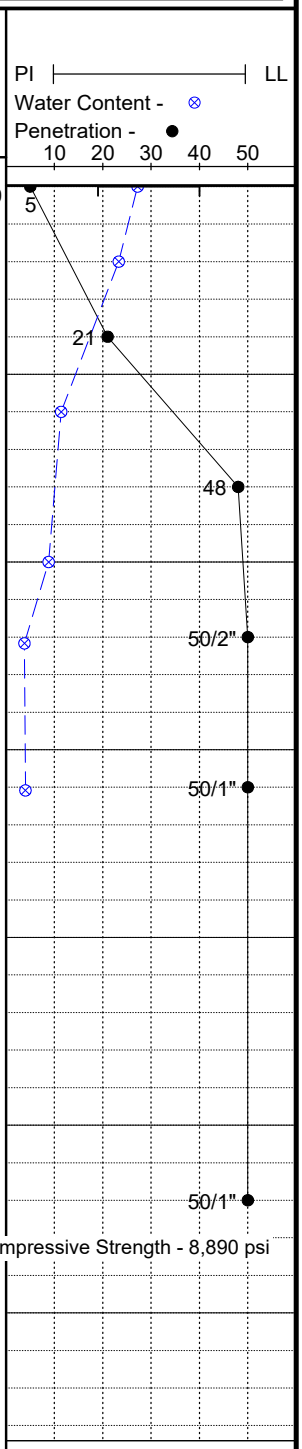

Boring backfilled after 24 hour water level observation.

Received by VMRC September 1, 2020 /blh

Geotechnical Solutions, Inc.

www.geotechnical-solutions.com

PROJECT: Hartland Drive Bridges **PROJECT NO.:** GP-192603-A
CLIENT: Timber Ridge at Hartland, LLC **BORING NO.:** SB-2
PROJECT LOCATION: Loudoun County, VA
LOCATION: South Bridge - North Abutment **ELEVATION:** 299.47 ft. MSL
DRILLER: Recon Drilling, Inc, (C. Gudiel) **LOGGED BY:** J. Kline
DRILLING METHOD: 3.25" I.D. HSA w/Autohammer & NQ Core Bit (Diedrich **DATE:** 11/08/2019
DEPTH TO - WATER> INITIAL: 10 ft. **AFTER 24 HOURS:** 10 ft. **CAVING>** C 12 ft.
GRID COORDINATES: N 7036009.31 **E** 11745812.39

This information pertains only to this boring and should not be interpreted as being indicitive of the site.

Depth/Elevation (feet)	Graphic	Description	USCS Class.	Sample No.	Blow Counts	Recovery (in.)	Moisture Content (%)	Liquid Limit	Plasticity Index	%<#200	PI — LL; Water Content - ⊗; Penetration - ● (10 20 30 40 50)
282.5 / 17.5		continuous at moderate to high angle, moderately to highly jointed, slightly rough with <0.2 in. separation, hard wall rock, continuous at low to moderate angle Core Run Length - 5 feet Recovery = 83.3% RQD = 62.5 = Fair Quality									
280 / 20		18.6 Slightly weathered, moderately hard, thin-bedded reddish brown argillaceous indurated and interbedded SILTSTONE and SANDSTONE, moderately to highly fractured, slightly rough, with <0.05 in. separation, hard wall rock, continuous at moderate to high angle, moderately to highly jointed, slightly rough with <0.2 in. separation, hard wall rock, continuous at low to moderate angle Core Run Length - 5 feet Recovery = 100.0% RQD = 90.0 = Excellent Quality		R2		60					
277.5 / 22.5		23.6 Slightly weathered, moderately hard, thin-bedded reddish brown argillaceous indurated and interbedded SILTSTONE and SANDSTONE, moderately fractured, slightly rough, with no separation, hard wall rock, continuous at moderate to high angle, moderately jointed, slightly rough with no separation, hard wall rock, continuous at low to moderate angle Core Run Length - 5 feet Recovery = 96.7% RQD = 96.5 = Excellent Quality		R3		58					
275 / 25											
272.5 / 27.5											
270 / 30		28.6 Slightly weathered, moderately hard, thin-bedded reddish brown argillaceous indurated and		R4		60					
267.5 / 32.5											

Boring backfilled after 24 hour water level observation.

Received by VMRC September 1, 2020 /blh

Geotechnical Solutions, Inc.

www.geotechnical-solutions.com

PROJECT: Hartland Drive Bridges **PROJECT NO.:** GP-192603-A
CLIENT: Timber Ridge at Hartland, LLC **BORING NO.:** SB-2
PROJECT LOCATION: Loudoun County, VA
LOCATION: South Bridge - North Abutment **ELEVATION:** 299.47 ft. MSL
DRILLER: Recon Drilling, Inc, (C. Gudiel) **LOGGED BY:** J. Kline
DRILLING METHOD: 3.25" I.D. HSA w/Autohammer & NQ Core Bit (Diedrich **DATE:** 11/08/2019
DEPTH TO - WATER> INITIAL: ▽ 10 ft. **AFTER 24 HOURS:** ▼ 10 ft. **CAVING>** C 12 ft.
GRID COORDINATES: N 7036009.31 **E** 11745812.39

This information pertains only to this boring and should not be interpreted as being indicitive of the site.

Depth/Elevation (feet)	Graphic	Description	USCS Class.	Sample No.	Blow Counts	Recovery (in.)	Moisture Content (%)	Liquid Limit	Plasticity Index	%<#200	PI — LL; Water Content - ⊗; Penetration - ● (10 20 30 40 50)
265 / 35		interbedded SILTSTONE and SANDSTONE, moderately fractured, slightly rough, with no separation, hard wall rock, continuous at moderate to high angle, moderately jointed, slightly rough with no separation, hard wall rock, continuous at low to moderate angle Core Run Length - 5 feet Recovery = 100.0% RQD = 100.0 = Excellent Quality									
262.5 / 37.5		Auger refusal at 13.6 feet. Rock core terminated at 33.6 feet.									
260 / 40											
257.5 / 42.5											
255 / 45											
252.5 / 47.5											
250 / 50											

Boring backfilled after 24 hour water level observation.

Received by VMRC September 1, 2020 /blh

Geotechnical Solutions, Inc.

www.geotechnical-solutions.com

PROJECT: Hartland Drive Bridges **PROJECT NO.:** GP-192603-A
CLIENT: Timber Ridge at Hartland, LLC **BORING NO.:** SB-3
PROJECT LOCATION: Loudoun County, VA
LOCATION: South Bridge - South Abutment **ELEVATION:** 298.73 ft. MSL
DRILLER: Recon Drilling, Inc, (C. Gudiel) **LOGGED BY:** J. Kline
DRILLING METHOD: 3.25" I.D. HSA w/Autohammer & NQ Core Bit (Diedrich **DATE:** 11/11/2019
DEPTH TO - WATER> INITIAL: 5 ft. **AFTER 24 HOURS:** 6 ft. **CAVING>** C 13 ft.
GRID COORDINATES: N 7035906.92 **E** 11745787.42

This information pertains only to this boring and should not be interpreted as being indicitive of the site.

Depth/Elevation (feet)	Graphic	Description	USCS Class.	Sample No.	Blow Counts	Recovery (in.)	Moisture Content (%)	Liquid Limit	Plasticity Index	%<#200
0 / 297.5		2 inches of TOPSOIL	TOPS	Bulk			15.4	32	13	86.0
		0.16 Alluvium - Brown SANDY LEAN CLAY, soft moist,	CL	S1	2 2 2 2	20	28.8			
2.5 / 295		2.5 Residual - Red-brown SANDY LEAN CLAY, contains siltstone fragments, medium stiff, moist	CL	S2	3 4 4 5	24	21.9	36	19	70.7
5 / 292.5				S3	3 3 4 5	24	23.3			
		6.5 IGM - Highly weathered, moderately hard, medium bedded red-brown SILTSTONE	IGM	S4	18 50/5"	11	9.9			
7.5 / 290				S5	50/2"	1	3.8			
10 / 287.5										
12.5 / 285		13.7 Slightly weathered, moderately hard, thin-bedded reddish brown argillaceous indurated, cross-bedded and interbedded SILTSTONE and SANDSTONE, moderately to highly fractured, slightly rough, with no separation, hard wall rock,	ROCK	S6	50/2"	1	4.2			
15 / 282.5				R1		60				

15.3-16.0 ft. - Rock Unconfined Compressive Strength - 5,900 psi

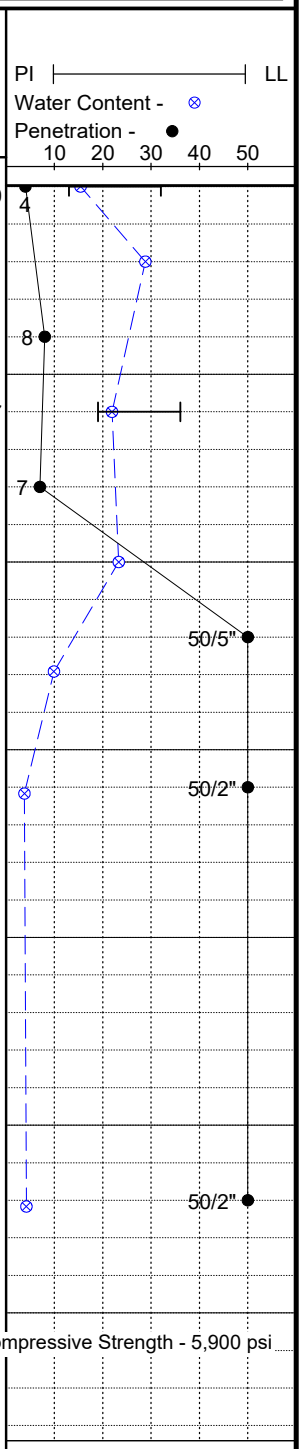

Boring backfilled after 24 hour water level observation.

Received by VMRC September 1, 2020 /blh

Geotechnical Solutions, Inc.

www.geotechnical-solutions.com

PROJECT: Hartland Drive Bridges **PROJECT NO.:** GP-192603-A
CLIENT: Timber Ridge at Hartland, LLC **BORING NO.:** SB-3
PROJECT LOCATION: Loudoun County, VA
LOCATION: South Bridge - South Abutment **ELEVATION:** 298.73 ft. MSL
DRILLER: Recon Drilling, Inc, (C. Gudiel) **LOGGED BY:** J. Kline
DRILLING METHOD: 3.25" I.D. HSA w/Autohammer & NQ Core Bit (Diedrich **DATE:** 11/11/2019
DEPTH TO - WATER> INITIAL: 5 ft. **AFTER 24 HOURS:** 6 ft. **CAVING>** C 13 ft.
GRID COORDINATES: N 7035906.92 **E** 11745787.42

This information pertains only to this boring and should not be interpreted as being indicitive of the site.

Depth/Elevation (feet)	Graphic	Description	USCS Class.	Sample No.	Blow Counts	Recovery (in.)	Moisture Content (%)	Liquid Limit	Plasticity Index	%<#200	PI — LL; Water Content - ⊗; Penetration - ● (10 20 30 40 50)
17.5 / 280		continuous at moderate to high angle, moderately to highly jointed, slightly rough with no separation, hard wall rock, continuous at low to moderate angle Core Run Length - 5 feet Recovery = 100.0% RQD = 93.1 = Excellent Quality									
20 / 277.5		18.7 Slightly weathered, moderately hard, thin-bedded reddish brown argillaceous indurated, cross-bedded and interbedded SILTSTONE and SANDSTONE, moderately to highly fractured, slightly rough, with no separation, hard wall rock, continuous at moderate to high angle, moderately to highly jointed, slightly rough with <0.2 in. separation, hard wall rock, continuous at low to moderate angle Core Run Length - 5 feet Recovery = 100.0% RQD = 95.8 = Excellent Quality		R2		60					
22.5 / 275		23.7 Slightly weathered, moderately hard, thin-bedded reddish brown argillaceous indurated, cross-bedded and interbedded SILTSTONE and SANDSTONE, moderately to highly fractured, slightly rough, with no separation, hard wall rock, continuous at moderate to high angle, moderately to highly jointed, slightly rough with no separation, hard wall rock, continuous at low to moderate angle Core Run Length - 5 feet Recovery = 100.0% RQD = 100.0 = Excellent Quality		R3		60					
25 / 272.5		28.7 Slightly weathered, moderately hard, thin-bedded reddish brown		R4		60					
27.5 / 270											
30 / 267.5											
32.5											

Boring backfilled after 24 hour water level observation.

Received by VMRC September 1, 2020 /blh

Geotechnical Solutions, Inc.

www.geotechnical-solutions.com

PROJECT: Hartland Drive Bridges **PROJECT NO.:** GP-192603-A
CLIENT: Timber Ridge at Hartland, LLC **BORING NO.:** SB-3
PROJECT LOCATION: Loudoun County, VA
LOCATION: South Bridge - South Abutment **ELEVATION:** 298.73 ft. MSL
DRILLER: Recon Drilling, Inc, (C. Gudiel) **LOGGED BY:** J. Kline
DRILLING METHOD: 3.25" I.D. HSA w/Autohammer & NQ Core Bit (Diedrich **DATE:** 11/11/2019
DEPTH TO - WATER> INITIAL: 5 ft. **AFTER 24 HOURS:** 6 ft. **CAVING>** C 13 ft.
GRID COORDINATES: N 7035906.92 **E** 11745787.42

This information pertains only to this boring and should not be interpreted as being indicitive of the site.

Depth/Elevation (feet)	Graphic	Description	USCS Class.	Sample No.	Blow Counts	Recovery (in.)	Moisture Content (%)	Liquid Limit	Plasticity Index	%<#200	PI — LL; Water Content - ⊗; Penetration - ● (10 20 30 40 50)
265		argillaceous indurated, cross-bedded and interbedded SILTSTONE and SANDSTONE, moderately to highly fractured, slightly rough, with <0.2 in. separation, hard wall rock, continuous at moderate to high angle, moderately to highly jointed, slightly rough with no separation, hard wall rock, continuous at low to moderate angle Core Run Length - 5 feet Recovery = 100.0% RQD = 100.0 = Excellent Quality									
35											
262.5											
37.5											
260		Auger refusal at 13.7 feet. Rock core terminated at 33.7 feet.									
40											
257.5											
42.5											
255											
45											
252.5											
47.5											
250											
50											

Boring backfilled after 24 hour water level observation.

Received by VMRC September 1, 2020 /blh

Geotechnical Solutions, Inc.

www.geotechnical-solutions.com

PROJECT: Hartland Drive Bridges **PROJECT NO.:** GP-192603-A
CLIENT: Timber Ridge at Hartland, LLC **BORING NO.:** SB-4
PROJECT LOCATION: Loudoun County, VA
LOCATION: South Bridge - Upstream Stream Channel **ELEVATION:** 298.81 ft.
DRILLER: Recon Drilling, Inc, (C. Gudiel) **LOGGED BY:** J. Kline
DRILLING METHOD: 3.25" I.D. HSA w/Autohammer & NQ Core Bit (Diedrich **DATE:** 11/11/2019
DEPTH TO - WATER> INITIAL: 0 ft. **AFTER 24 HOURS:** 0 ft. **CAVING>** C 3 ft.
GRID COORDINATES: N 7035956.47 **E** 11745804.29

This information pertains only to this boring and should not be interpreted as being indicitive of the site.

Depth/Elevation (feet)	Graphic	Description	USCS Class.	Sample No.	Blow Counts	Recovery (in.)	Moisture Content (%)	Liquid Limit	Plasticity Index	%<#200
0 / 297.5		Alluvium - Brown SANDY LEAN CLAY, very soft, moist	CL	S1	3 1 2 3	24	20.5			
				Bulk		48	22.1	32	15	64.6
2.5				S2	10 14 23 50/3"	21	12.0			
295		3.5 IGM - Highly weathered, moderately hard, medium bedded red-brown SILTSTONE	IGM							
5 / 292.5		4.0 Slightly weathered, moderately hard, thin-bedded reddish brown argillaceous indurated, cross-bedded and interbedded SILTSTONE and SANDSTONE, highly to intensely fractured, slightly rough, with <0.05 in. separation, hard wall rock, continuous at moderate to high angle, highly to intensely jointed, slightly rough with no separation, hard wall rock, continuous at low to moderate angle Core Run Length - 5 feet Recovery = 98.3% RQD = 62.3 = Fair Quality	ROCK	R1		60				
7.5 / 290										
10										
287.5		9.0 Slightly weathered, moderately hard, thin-bedded reddish brown argillaceous and indurated SILTSTONE, moderately to highly fractured, slightly rough, with <0.05 in. separation, hard wall rock, continuous at moderate to high angle, highly to intensely jointed, slightly rough with <0.2 in. separation, hard wall rock, continuous at low to moderate angle Core Run Length - 5 feet Recovery = 98.3%		R2		60				
12.5 / 285										
15 / 282.5										

10.95-11.6 ft. - Rock Unconfined Compressive Strength - 3,700 psi

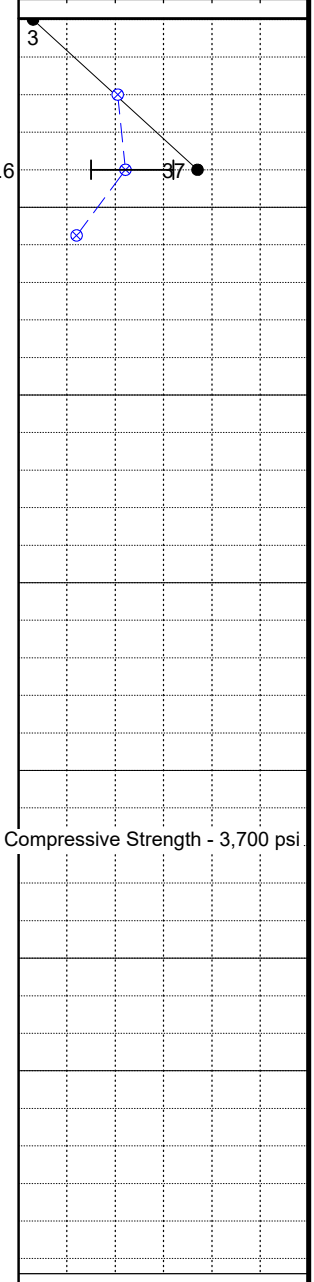

Boring backfilled after 24 hour water level observation.

Figure PAGE 1 of 2

Received by VMRC September 1, 2020 /blh

Geotechnical Solutions, Inc.

www.geotechnical-solutions.com

PROJECT: Hartland Drive Bridges **PROJECT NO.:** GP-192603-A
CLIENT: Timber Ridge at Hartland, LLC **BORING NO.:** SB-4
PROJECT LOCATION: Loudoun County, VA
LOCATION: South Bridge - Upstream Stream Channel **ELEVATION:** 298.81 ft.
DRILLER: Recon Drilling, Inc, (C. Gudiel) **LOGGED BY:** J. Kline
DRILLING METHOD: 3.25" I.D. HSA w/Autohammer & NQ Core Bit (Diedrich **DATE:** 11/11/2019
DEPTH TO - WATER> INITIAL: 0 ft. **AFTER 24 HOURS:** 0 ft. **CAVING>** C 3 ft.
GRID COORDINATES: N 7035956.47 **E** 11745804.29

This information pertains only to this boring and should not be interpreted as being indicitive of the site.

Depth/Elevation (feet)	Graphic	Description	USCS Class.	Sample No.	Blow Counts	Recovery (in.)	Moisture Content (%)	Liquid Limit	Plasticity Index	%<#200	PI — LL; Water Content - ⊗; Penetration - ● (10 20 30 40 50)
17.5 / 280		RQD = 72.3 = Fair Quality Auger refusal at 4 feet. Rock core terminated at 14 feet.									
20 / 277.5											
22.5 / 275											
25 / 272.5											
27.5 / 270											
30 / 267.5											
32.5											

Boring backfilled after 24 hour water level observation.

Received by VMRC September 1, 2020 /blh

Geotechnical Solutions, Inc.

www.geotechnical-solutions.com

PROJECT: Hartland Drive Bridges **PROJECT NO.:** GP-192603

CLIENT: Willowsford Operations, LLC c/o Willowsford Management, **BORING NO.:** BR-5

PROJECT LOCATION:

LOCATION: Hartland Drive Station 89+76, CL **ELEVATION:** 299.04 ft. MSL

DRILLER: Recon Drilling, Inc, (C. Gudiel) **LOGGED BY:** J. Kline

DRILLING METHOD: 3.25" I.D. HSA w/Autohammer (Diedrich D-50 ATV Rig) **DATE:** 05/11/2019

DEPTH TO WATER> INITIAL: ▽ 5 ft. **AFTER 24 HOURS:** ▼ 5 ft. **CAVING>** ⌒ 30 ft.

This information pertains only to this boring and should not be interpreted as being indicitive of the site.

Depth/Elevation (feet)	Graphic	Description	USCS Class.	Sample No.	Blow Counts	Recovery (in.)	Moisture Content (%)	Liquid Limit	Plasticity Index	%<#200
0		3 inches of TOPSOIL (0.25)	TOPS							
		Brown, moist, soft to medium stiff sandy Lean CLAY (Alluvium)	CL	S1	1 2 2 2	23	33.5			
297										
3				S2	5 2 2 3	15	23.2	33	13	83.8
294				S3	3 4 4 6	24	23.5			
6		Reddish brown, moist, very hard Weathered ROCK (Siltstone) (6.0)	IGM	S4	19 33 50/3"	13	8.1			
291				S5	50/3"	1	2.1			
9										
288										
12										
285				S6	50/1"	1	2.4			
15										
282										
18				S7	50/1"	1	5.1			
279										

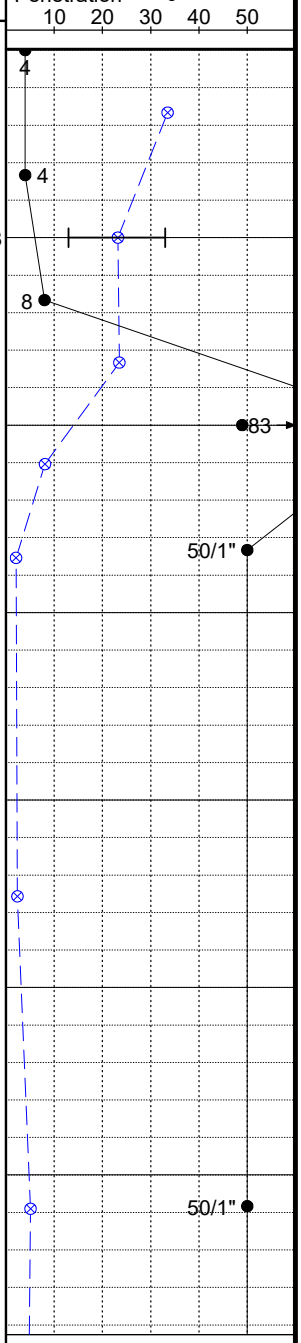

Boring backfilled after 24-hour water observations.

Received by VMRC September 1, 2020 /blh

Geotechnical Solutions, Inc.

www.geotechnical-solutions.com

PROJECT: Hartland Drive Bridges **PROJECT NO.:** GP-192603

CLIENT: Willowsford Operations, LLC c/o Willowsford Management, **BORING NO.:** BR-5

PROJECT LOCATION:

LOCATION: Hartland Drive Station 89+76, CL **ELEVATION:** 299.04 ft. MSL

DRILLER: Recon Drilling, Inc, (C. Gudiel) **LOGGED BY:** J. Kline

DRILLING METHOD: 3.25" I.D. HSA w/Autohammer (Diedrich D-50 ATV Rig) **DATE:** 05/11/2019

DEPTH TO WATER> INITIAL: ▽ 5 ft. **AFTER 24 HOURS:** ▼ 5 ft. **CAVING>** ⌒ 30 ft.

This information pertains only to this boring and should not be interpreted as being indicitive of the site.

Depth/Elevation (feet)	Graphic	Description	USCS Class.	Sample No.	Blow Counts	Recovery (in.)	Moisture Content (%)	Liquid Limit	Plasticity Index	%<#200
21 / 276										
24 / 273				S8	50/1"	1	4.5			
27 / 270				S9	50/1"	1	5.4			
30 / 267										
33				S10	50/0"	NR				
264		35.0	ROCK							
36 / 261		Slightly weathered, moderately hard, thin-bedded reddish brown indurated and argillaceous, SANDSTONE, highly to moderately fractured, slightly rough, with <0.2 in. separation, partially calcite-filled, hard wall rock, continuous at low to moderate angle, Core Run Length - 5 feet Recovery - 93.3% RQD = 78.75 = Good Quality		R1		56				
39 / 258		40.0 Slightly weathered, moderately hard,								

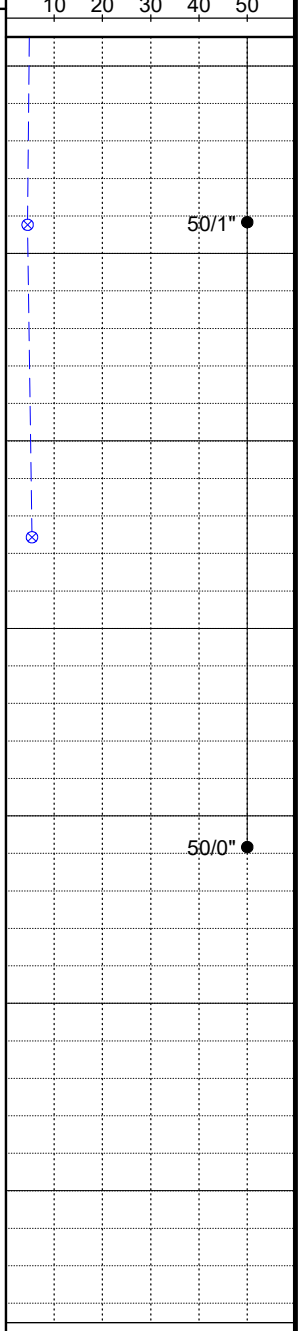

Boring backfilled after 24-hour water observations.

Received by VMRC September 1, 2020 /blh

Geotechnical Solutions, Inc.

www.geotechnical-solutions.com

PROJECT: Hartland Drive Bridges **PROJECT NO.:** GP-192603
CLIENT: Willowsford Operations, LLC c/o Willowsford Management, **BORING NO.:** BR-5
PROJECT LOCATION:
LOCATION: Hartland Drive Station 89+76, CL **ELEVATION:** 299.04 ft. MSL
DRILLER: Recon Drilling, Inc, (C. Gudiel) **LOGGED BY:** J. Kline
DRILLING METHOD: 3.25" I.D. HSA w/Autohammer (Diedrich D-50 ATV Rig) **DATE:** 05/11/2019
DEPTH TO WATER> INITIAL: 5 ft. **AFTER 24 HOURS:** 5 ft. **CAVING>** 30 ft.

This information pertains only to this boring and should not be interpreted as being indicitive of the site.

Depth/Elevation (feet)	Graphic	Description	USCS Class.	Sample No.	Blow Counts	Recovery (in.)	Moisture Content (%)	Liquid Limit	Plasticity Index	%<#200	PI — LL; Water Content - ⊗; Penetration - ● (10 20 30 40 50)
42 / 255		thin-bedded reddish brown indurated, interbedded and argillaceous, SILTSTONE and SANDSTONE, highly to moderately fractured, slightly rough, with <0.2 in. separation, partially calcite-filled, hard wall rock, continuous at low to moderate angle, Core Run Length - 5 feet Recovery - 96.7% RQD = 93.1 = Excellent Quality		R2		57					
45 / 252		45.0 Slightly weathered, moderately hard, thin-bedded reddish brown and gray indurated and argillaceous, SILTSTONE and SANDSTONE, series of upward-fining layers from 45.7 to 48.3 feet, highly fractured, slightly rough, with <0.2 in. separation, partially calcite-filled, hard wall rock, continuous at low to moderate angle, Core Run Length - 5 feet Recovery - 95% RQD = 86.9 = Good Quality		R3	46.4-47.1 ft. - Rock Unconfined Compressive Strength - 1,330 psi	56					
48 / 249											
51 / 246		50.0 Slightly weathered, moderately hard, thin-bedded reddish brown and gray indurated and argillaceous, SANDSTONE, highly to moderately fractured, slightly rough, with <0.2 in. separation, partially calcite-filled, hard wall rock, continuous at low to moderate angle, Core Run Length - 5 feet Recovery - 96.7% RQD = 65.6 = Fair Quality		R4		60					
54 / 243											
57 / 240		Auger refusal at 35 feet, rock core terminated at 55 feet.									
60											

Boring backfilled after 24-hour water observations.

Received by VMRC September 1, 2020 /blh

Particle Size Distribution Report

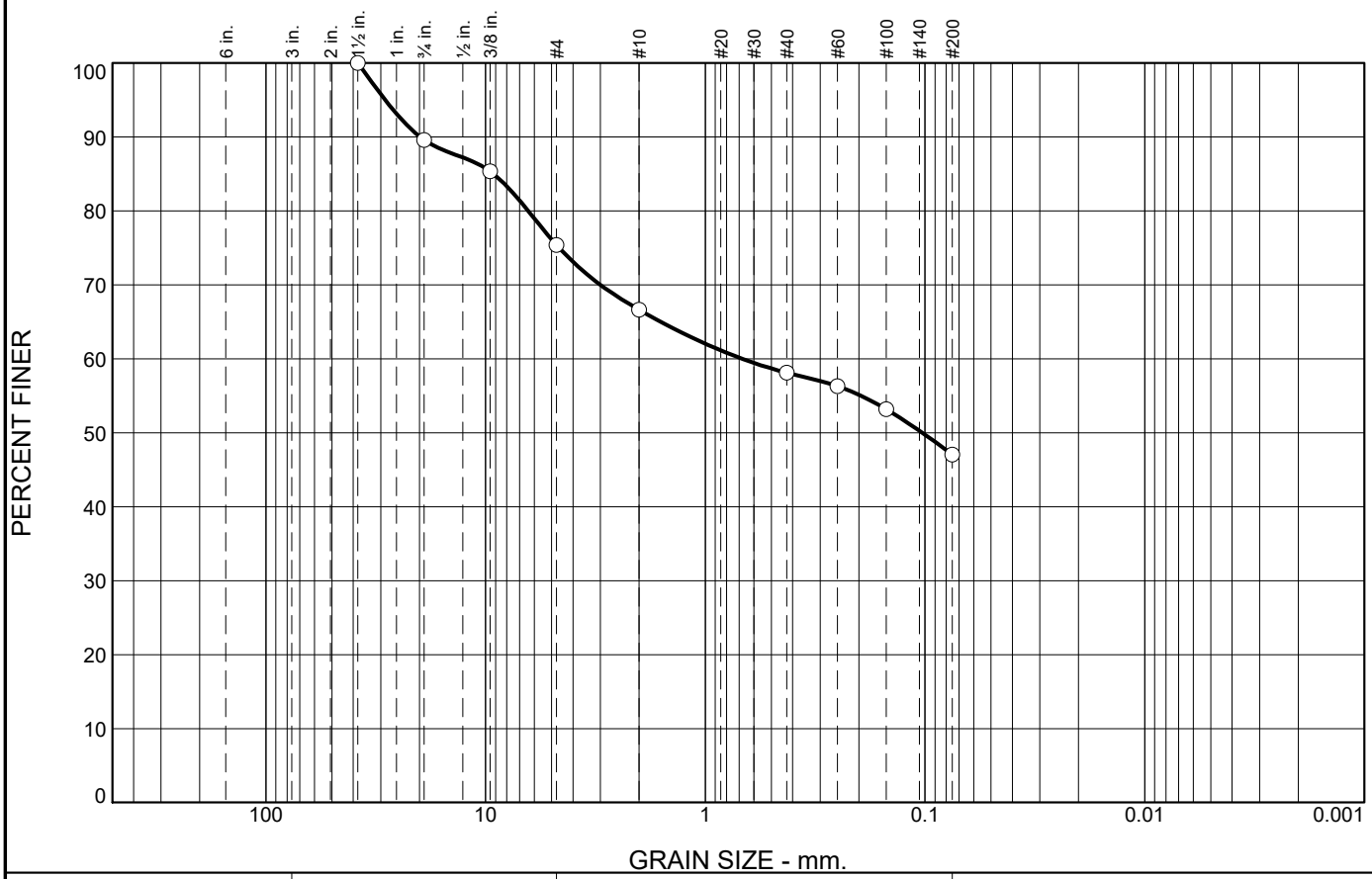

% +3"	% Gravel		% Sand			% Fines	
	Coarse	Fine	Coarse	Medium	Fine	Silt	Clay
0.0	10.4	14.2	8.8	8.5	11.0	47.1	

SIEVE SIZE	PERCENT FINER	SPEC.* PERCENT	PASS? (X=NO)
1.5	100.0		
3/4	89.6		
3/8	85.3		
#4	75.4		
#10	66.6		
#40	58.1		
#60	56.3		
#100	53.2		
#200	47.1		

* (no specification provided)

Soil Description

Reddish brown clayey sand with gravel

Atterberg Limits

PL= 20 LL= 29 PI= 9

Coefficients

D_{90}= 19.8899 D_{85}= 9.2119 D_{60}= 0.6800
D_{50}= 0.1030 D_{30}= D_{15}=
D_{10}= C_u= C_c=

Classification

USCS= SC AASHTO= A-4(1)

Remarks

Natural moisture content: 20.8%

Source of Sample: SB-1 **Depth:** 2
Sample Number: S2 **Date:** 12-9-19

Geotechnical Solutions, Inc.
Chantilly, Virginia

Client: Timber Ridge at Hartland, LLC
Project: Hartland Drive Bridges
Project No: GP-192603-A **Figure**

Received by VMRC September 1, 2020 /blh

Particle Size Distribution Report

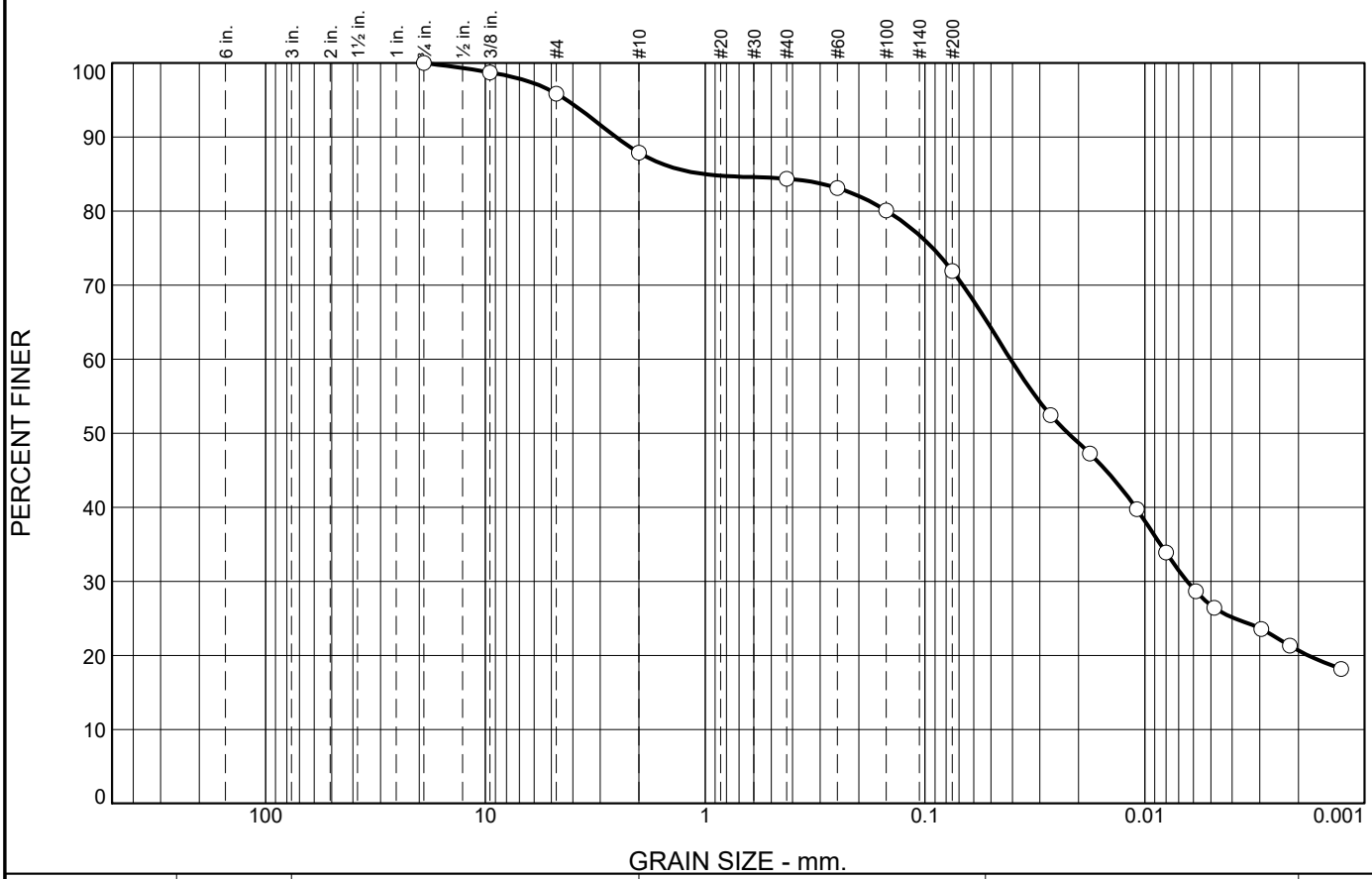

% Stones	% +3"	% Gravel			% Sand					% Silt		% Clay
		Coarse	Medium	Fine	V. Crs.	Crs.	Med.	Fine	V. Fine	Crs.	Fine	
0.0	0.0	0.0	4.2	7.9	2.9	0.5	1.4	7.1	10.6	16.7	28.0	20.7

SIEVE SIZE	PERCENT FINER	SPEC.* PERCENT	PASS? (X=NO)
0.75	100.0		
0.375	98.7		
#4	95.8		
#10	87.9		
#40	84.4		
#60	83.1		
#100	80.1		
#200	71.9		
0.0268 mm.	52.5		
0.0177 mm.	47.2		
0.0108 mm.	39.7		
0.0080 mm.	33.9		
0.0059 mm.	28.7		
0.0048 mm.	26.4		
0.0029 mm.	23.6		
0.0022 mm.	21.3		
0.0013 mm.	18.2		

* (no specification provided)

Soil Description

Brown lean CLAY with sand

Atterberg Limits

PL= 21 LL= 40 PI= 19

Coefficients

D_{90}= 2.5498 D_{85}= 1.0180 D_{60}= 0.0408
D_{50}= 0.0223 D_{30}= 0.0064 D_{15}=
D_{10}= C_u= C_c=

Classification

USCS= CL AASHTO= A-6(13)

Remarks

Natural moisture content 27.2%

USDA Classification: Silt loam

Source of Sample: SB-2 **Depth:** 0-5'
Sample Number: Bulk **Date:** 12-5-2019

Geotechnical Solutions, Inc.
Chantilly, Virginia

Client: Timber Ridge at Hartland, LLC
Project: Hartland Drive Bridges
Project No: GP-192603-A **Figure**

Received by VMRC September 1, 2020 /blh

Particle Size Distribution Report

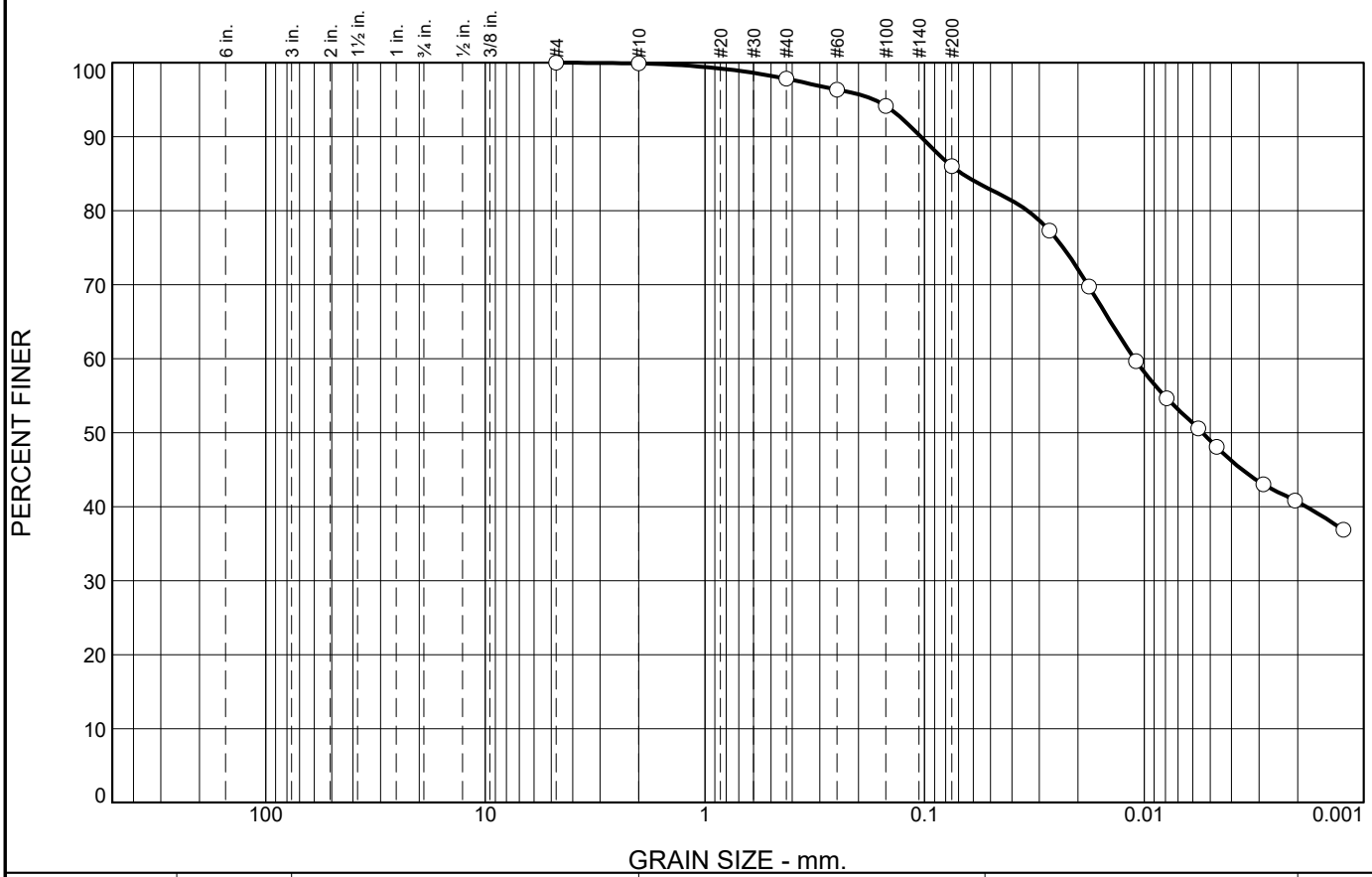

% Stones	% +3"	% Gravel			% Sand					% Silt		% Clay
		Coarse	Medium	Fine	V. Crs.	Crs.	Med.	Fine	V. Fine	Crs.	Fine	
0.0	0.0	0.0	0.0	0.1	0.5	1.2	1.9	6.8	6.3	11.1	31.5	40.6

SIEVE SIZE	PERCENT FINER	SPEC.* PERCENT	PASS? (X=NO)
#4	100.0		
#10	99.9		
#40	97.8		
#60	96.3		
#100	94.2		
#200	86.0		
0.0270 mm.	77.3		
0.0178 mm.	69.7		
0.0109 mm.	59.7		
0.0079 mm.	54.6		
0.0057 mm.	50.5		
0.0047 mm.	48.1		
0.0029 mm.	43.0		
0.0021 mm.	40.8		
0.0012 mm.	36.9		

* (no specification provided)

Soil Description

Reddish brown lean CLAY

Atterberg Limits

PL= 19 LL= 32 PI= 13

Coefficients

D_{90}= 0.1040 D_{85}= 0.0675 D_{60}= 0.0111
D_{50}= 0.0054 D_{30}= D_{15}=
D_{10}= C_u= C_c=

Classification

USCS= CL AASHTO= A-6(10)

Remarks

Natural moisture content 15.4%

USDA Classification: Silty clay

Source of Sample: SB-3 **Depth:** 0-5
Sample Number: Bulk

Date: 12-10-2019

Geotechnical Solutions, Inc.
Chantilly, Virginia

Client: Timber Ridge at Hartland, LLC
Project: Hartland Drive Bridges
Project No: GP-192603-A **Figure**

Received by VMRC September 1, 2020 /blh

Particle Size Distribution Report

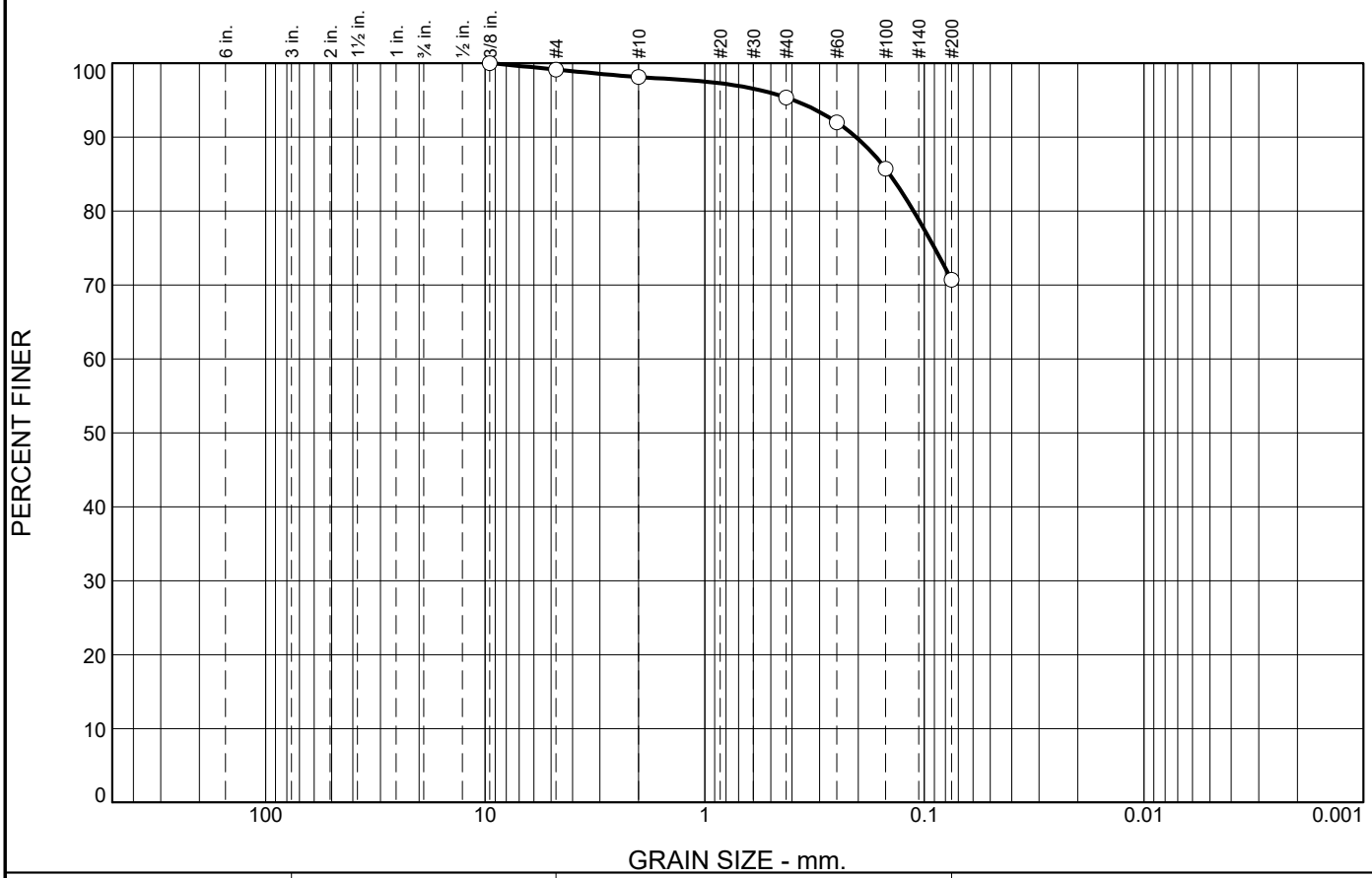

% +3"	% Gravel		% Sand			% Fines	
	Coarse	Fine	Coarse	Medium	Fine	Silt	Clay
0.0	0.0	0.9	1.0	2.8	24.6	70.7	

SIEVE SIZE	PERCENT FINER	SPEC.* PERCENT	PASS? (X=NO)
3/8	100.0		
#4	99.1		
#10	98.1		
#40	95.3		
#60	92.0		
#100	85.7		
#200	70.7		

* (no specification provided)

Soil Description

Reddish brown lean clay with sand

Atterberg Limits

PL= 17 LL= 36 PI= 19

Coefficients

D_{90}= 0.2045 D_{85}= 0.1440 D_{60}=
D_{50}= D_{30}= D_{15}=
D_{10}= C_u= C_c=

Classification

USCS= CL AASHTO= A-6(12)

Remarks

Natural moisture content: 21.9%

Source of Sample: SB-3 **Depth:** 2
Sample Number: S2 **Date:** 12-9-19

Geotechnical Solutions, Inc.
Chantilly, Virginia

Client: Timber Ridge at Hartland, LLC
Project: Hartland Drive Bridges
Project No: GP-192603-A **Figure**

Received by VMRC September 1, 2020 /blh

Particle Size Distribution Report

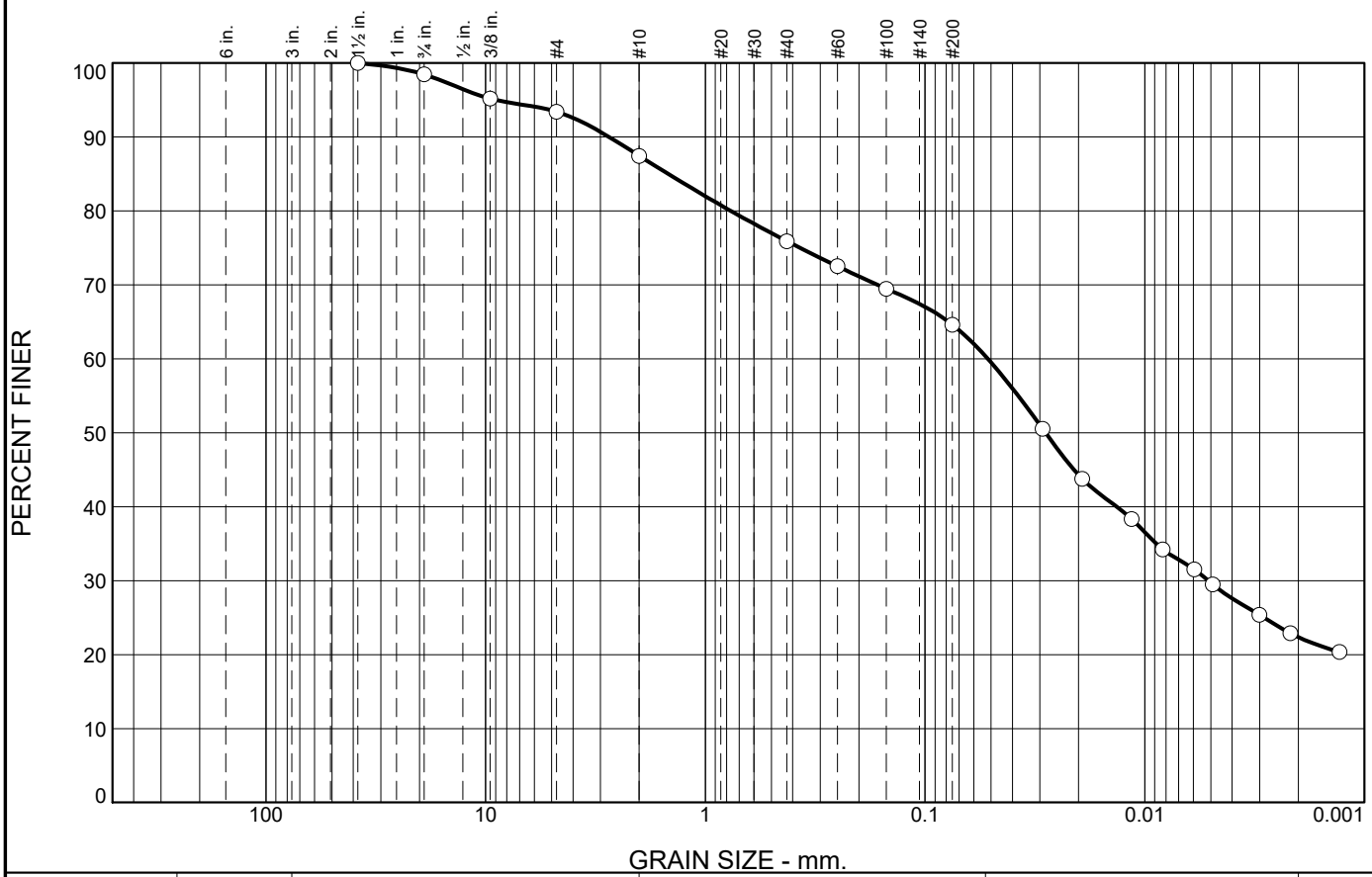

% Stones	% +3"	% Gravel			% Sand					% Silt		% Clay
		Coarse	Medium	Fine	V. Crs.	Crs.	Med.	Fine	V. Fine	Crs.	Fine	
0.0	0.0	1.6	5.0	6.0	5.4	5.0	4.5	5.5	6.7	16.0	21.9	22.4

SIEVE SIZE	PERCENT FINER	SPEC.* PERCENT	PASS? (X=NO)
1.5	100.0		
0.75	98.4		
0.375	95.2		
#4	93.4		
#10	87.4		
#40	75.9		
#60	72.5		
#100	69.5		
#200	64.6		
0.0291 mm.	50.5		
0.0192 mm.	43.7		
0.0115 mm.	38.3		
0.0083 mm.	34.2		
0.0059 mm.	31.5		
0.0049 mm.	29.5		
0.0030 mm.	25.4		
0.0022 mm.	22.9		
0.0013 mm.	20.3		

* (no specification provided)

Soil Description

Reddish brown sandy lean CLAY

Atterberg Limits

PL= 17 LL= 32 PI= 15

Coefficients

D_{90}= 2.7457 D_{85}= 1.4777 D_{60}= 0.0518
D_{50}= 0.0283 D_{30}= 0.0051 D_{15}=
D_{10}= C_u= C_c=

Classification

USCS= CL AASHTO= A-6(7)

Remarks

Natural moisture content 22.1%

USDA Classification: Loam

Source of Sample: SB-4 **Depth:** 0-4'
Sample Number: Bulk **Date:** 12-10-2019

Geotechnical Solutions, Inc.
Chantilly, Virginia

Client: Timber Ridge at Hartland, LLC
Project: Hartland Drive Bridges
Project No: GP-192603-A **Figure**

Received by VMRC September 1, 2020 /blh

4.7 Scour Recommendations

Scour analysis was performed using the Rock Erodibility Index method. The following conservative rock parameters were utilized to compute the Rock Erodibility Index for the siltstone rock of Stratum IV.

Table 7 – Rock Erodibility Index

Parameter	North Bridge	South Bridge
Mass strength Number, M_s	17.7	8.39
Rock joint set number, J_n	1.83	1.83
Rock Quality Designation (RQD)	79.7	86.8
Joint Roughness Number, J_r	1.5	1.5
Joint Alteration Number, J_a	2.0	2.0
Relative Orientation Parameter, J_s	0.69	0.69
K_b=RQD/J_n	43.55	47.43
K_d=J_r/J_a	0.75	0.75
The Rock Erodibility Index, K = M_s* K_b* K_d* J_s	398.91	205.93

It is our opinion that the rock of Stratum IV is highly resistant to scour. The IGM of Stratum III is considered scourable.

Where the foundation of any structural element, such as wing walls, does not extend to the rock of Stratum IV, scour protection shall be provided.

Received by VMRC September 1, 2020 /blh

Appendix B

Detailed Scour Calculations

Received by VMRC September 1, 2020 /blh

100-year Scour Calculations

100-year Hydraulic parameters Table

	User-defined Scour Table HEC-RAS output for the Profile and the Bridge under analysis																Design Discharge Return Period 100-Year	
	Reach	River Sta	Profile	W.S. Elev	Hydr Depth C	Hydr Depth L	Hydr Depth R	Vel Chnl	Vel Left	Vel Right	Q Channel	Q Left	Q Right	Top W Act Chan	Top W Act Left	Top W Act Right	Top Wdth Act	E.G. Slope
Section Location				(ft)	(ft)	(ft)	(ft)	(ft/s)	(ft/s)	(ft/s)	(cfs)	(cfs)	(cfs)	(ft)	(ft)	(ft)	(ft)	(ft/ft)
Approach Sec.	Reach1US	2400.2	100YR	304.65	6.64	3.41	5.66	3.79	1.11	1.55	1002.06	369.92	819.02	39.8	97.76	93.16	230.7	0.001088
U/S of Bridge Sec.	Reach1US	2293.7	100YR	304.42	6.88	4.3	5.34	5.14	1.75	2.07	801.89	54.52	1334.59	22.69	7.27	121	151	0.002078
BR inside U/S Sec.	Reach1US	2199.95 BR U	100YR	303.51	6.57	4.01	3.52	8.52	3.26	3.39	1269.41	622.26	299.33	22.69	47.59	25.05	95.33	0.006088
BR inside D/S Sec.	Reach1US	2199.95 BR D	100YR	302.38	5.44	3.28	3.12	11.1	4.01	4.25	1363.45	560.97	266.58	22.69	42.67	20.13	85.48	0.013167
D/s of Bridge Sec.	Reach1US	2120.49	100YR	302.23	5.55	3.55	3.51	7.82	2.76	2.74	985.54	368.36	837.11	22.69	37.63	87.01	147.3	0.006417

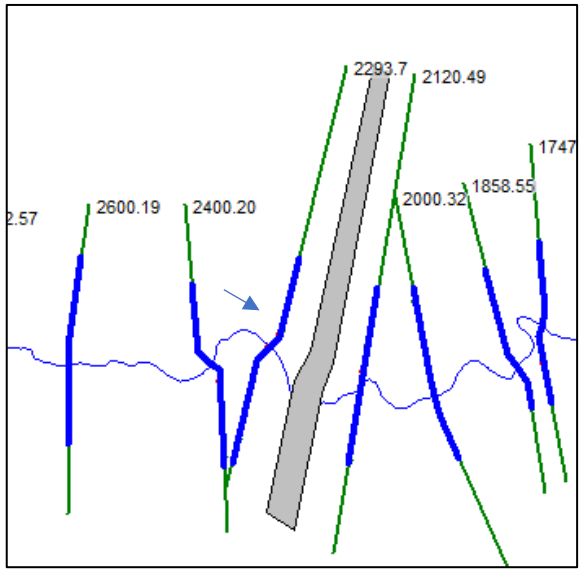

Received by VMRC September 1, 2020 /blh

Flow Tubes for Xsec just u/s of bridge

Plan: Prop Trib 1 NF BRD RN Reach1US RS: 2293.7 Profile: 100YR

	Pos	Left Sta	Right St	Flow	Area	W.P.	Percent	Hydr	Velocity	Shear	Power
		(ft)	(ft)	(cfs)	(sq ft)	(ft)	Conv	Depth(ft)	(ft/s)	(lb/sq ft)	(lb/ft s)
1	LOB	231.33	254.5	0	0.13	1.36	0	0.1	0	0.01	0
2	LOB	254.47	277.6	0	23.53	23.21	0	1.02	0	0.13	0
3	LOB	277.6	300.7	0	54.5	23.18	0	2.36	0	0.3	0
4	LOB	300.73	323.9	0	71.35	23.17	0	3.08	0	0.4	0
5	LOB	323.87	347	0	89.68	23.21	0	3.88	0	0.5	0
6	LOB	347	354.3	54.52	31.24	7.55	2.49	4.3	1.75	0.54	0.94
7	Chan	354.27	377	801.89	156.1	24.77	36.6	6.88	5.14	0.82	4.2
8	ROB	376.96	389.1	118.71	60.25	12.11	5.42	4.98	1.97	0.65	1.27
9	ROB	389.06	401.2	115.41	59.31	12.15	5.27	4.9	1.95	0.63	1.23
10	ROB	401.17	413.3	119.94	60.68	12.14	5.47	5.01	1.98	0.65	1.28
11	ROB	413.27	425.4	124.81	62.1	12.12	5.7	5.13	2.01	0.66	1.34
12	ROB	425.38	437.5	132.01	64.23	12.12	6.03	5.31	2.06	0.69	1.41
13	ROB	437.48	449.6	144.35	67.76	12.11	6.59	5.6	2.13	0.73	1.55
14	ROB	449.58	461.7	141.72	67.01	12.11	6.47	5.54	2.11	0.72	1.52
15	ROB	461.69	473.8	141.06	66.81	12.11	6.44	5.52	2.11	0.72	1.51
16	ROB	473.79	485.9	145.56	68.1	12.11	6.64	5.63	2.14	0.73	1.56
17	ROB	485.9	498	151.01	69.62	12.12	6.89	5.75	2.17	0.75	1.62
18	ROB	498	511.3	0	75.74	13.29	0	5.71	0	0.74	0
19	ROB	511.25	524.5	0	79.69	13.38	0	6.01	0	0.77	0
20	ROB	524.51	537.8	0	24.63	10.23	0	2.8	0	0.31	0

Plan: Prop Trib 1 NF BRD RN Reach1US RS: 2199.95 BR U Profile: 100YR

	Pos	Left Sta	Right St	Flow	Area	W.P.	Percent	Hydr	Velocity	Shear	Power	
		(ft)	(ft)	(cfs)	(sq ft)	(ft)	Conv	Depth(ft)	(ft/s)	(lb/sq ft)	(lb/ft s)	
1	LOB	365.8	385	63.79	17.11	11.72	2.91	1.71	3.73	0.55	2.07	L Abut
2	LOB	384.6	403	267.5	84.62	18.8	12.21	4.5	3.16	1.71	5.41	
3	LOB	403.39	422	291	89.1	18.83	13.28	4.74	3.27	1.8	5.87	
4	Chan	422.19	445	1269	149	24.77	57.94	6.57	8.52	2.29	19.47	
5	ROB	444.88	456	157.7	50.18	10.62	7.2	4.72	3.14	1.8	5.64	
6	ROB	455.5	466	138.5	36.12	11.91	6.32	3.4	3.83	1.15	4.42	
7	ROB	466.13	477	3.2	1.95	4.31	0.15	0.51	1.64	0.17	0.28	R Abut

Received by VMRC September 1, 2020 /blh

Flow Tubes for Approach Xsec

Plan: Prop Trib 1 NF BRD RN Reach1US RS: 2400.20 Profile: 100YR

	Pos	Left Sta	Right St	Flow	Area	W.P.	Percent	Hydr	Velocity	Shear	Power	
		(ft)	(ft)	(cfs)	(sq ft)	(ft)	Conv	Depth(ft)	(ft/s)	(lb/sq ft)	(lb/ft s)	
1	LOB	92.89	106	0.1	0.8	4.89	0	0.16	0.13	0.01	0	Inactive
2	LOB	106.15	119	5.05	12.34	13.33	0.23	0.93	0.41	0.06	0.03	Inactive
3	LOB	119.42	133	20.74	28.82	13.32	0.95	2.17	0.72	0.15	0.11	Inactive
4	LOB	132.69	146	39.65	42.49	13.3	1.81	3.2	0.93	0.22	0.2	Active
5	LOB	145.96	159	50.96	49.37	13.28	2.33	3.72	1.03	0.25	0.26	Active
6	LOB	159.23	173	65.61	57.46	13.29	2.99	4.33	1.14	0.29	0.34	Active
7	LOB	172.5	186	83.71	66.5	13.29	3.82	5.01	1.26	0.34	0.43	Active
8	LOB	185.77	199	104.1	75.81	13.29	4.75	5.71	1.37	0.39	0.53	Active
9	Chan	199.04	239	1002	264.3	40.67	45.74	6.64	3.79	0.44	1.67	Active
10	ROB	238.84	252	103.5	69.95	13.31	4.72	5.26	1.48	0.36	0.53	Active
11	ROB	252.15	265	107.8	71.69	13.31	4.92	5.39	1.5	0.37	0.55	Active
12	ROB	265.46	279	112.1	73.38	13.31	5.12	5.51	1.53	0.37	0.57	Active
13	ROB	278.77	292	118.1	75.7	13.31	5.39	5.69	1.56	0.39	0.6	Active
14	ROB	292.07	305	123.6	77.81	13.31	5.64	5.85	1.59	0.4	0.63	Active
15	ROB	305.38	319	128.7	79.73	13.31	5.88	5.99	1.61	0.41	0.66	Active
16	ROB	318.69	332	125.2	78.92	13.54	5.71	5.93	1.59	0.4	0.63	Active
17	ROB	332	344	0	36.94	12.74	0	3.01	0	0.2	0	Inactive
18	ROB	344.25	357	0	1.59	2.81	0	0.64	0	0.04	0	Inactive

Received by VMRC September 1, 2020 /blh

Projection of abutments upstream

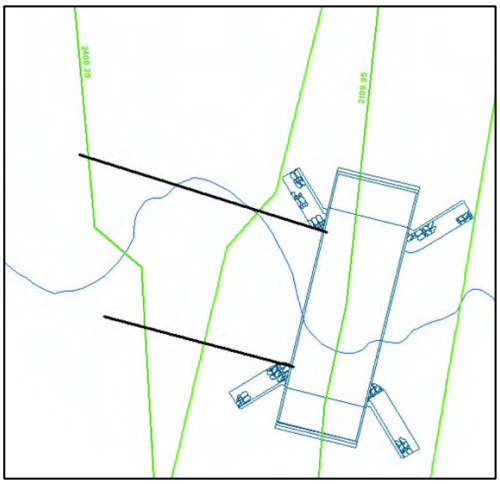

Table of overbank flow obstruction

	Approach Section	
	LOB	ROB
water edge	101.28	332
Projected station of Abut to approach	148	258
Flow in approach section overbank obstructed by abutment	73.37	655.06
Flow area of approach section overbank obstructed by abutment	92.04	455.57913
Length of embankment projected normal to the flow	46.72	74
Length of active flow obstructed by abutment projected into flow	15.31	74

Cross Section Output for BR U

Plan: Prop Trib 1 NF BRD RN Reach1US RS: 2199.95 BR U Profile: 100YR					
E.G. Elev (ft)	304.24	Element	Left OB	Channel	Right OB
Vel Head (ft)	0.72	Wt. n-Val.	0.094	0.045	0.086
W.S. Elev (ft)	303.51	Reach Len. (ft)	47.6	47.6	47.6
Crit W.S. (ft)	302	Flow Area (sq ft)	190.83	148.99	88.25
E.G. Slope (ft/ft)	0.00609	Area (sq ft)	190.83	148.99	88.25
Q Total (cfs)	2191	Flow (cfs)	622.26	1269.4	299.33
Top Width (ft)	95.33	Top Width (ft)	47.59	22.69	25.05
Vel Total (ft/s)	5.12	Avg. Vel. (ft/s)	3.26	8.52	3.39
Max Chl Dpth (ft)	8.55	Hydr. Depth (ft)	4.01	6.57	3.52
Conv. Total (cfs)	28081.4	Conv. (cfs)	7975.4	16270	3836.4
Length Wtd. (ft)	47.6	Wetted Per. (ft)	49.35	24.77	26.84
Min Ch El (ft)	294.96	Shear (lb/sq ft)	1.47	2.29	1.25
Alpha	1.78	Stream Power (lb/ft s)	4.79	19.47	4.24
Frctn Loss (ft)	0.41	Cum Volume (acre-ft)	12.66	8.57	12.09
C & E Loss (ft)	0.17	Cum SA (acres)	4.43	1.52	3.8

Received by VMRC September 1, 2020 /blh

Project Name:	Hartland	Discharge Tr:	100-Year
Structure Name:	South Bridge	Engineer:	K.Z.
Stream Name:	North Fork- Broad Run, Trib 1	Date:	02/13/20

Type of Contraction Scour

$$V_c = 11.17 \times y_1^{1/6} \times D_{50}^{1/3}$$

APPROACH MAIN CHANNEL		
Description of Variable	Symbol	Value
User Entered Variables		
Median diameter of bed material, mm	D_{50} =	0.028
Average depth (hydraulic depth) of flow in the main channel of the approach section, ft	y_1 =	6.64
Average velocity of flow in the main channel, ft/s	V_1 =	3.79
Calculated Results		
Maximum between Median diameter of bed material and lower limit (0.2 mm), ft	D_{50} =	0.000656
Critical velocity of bed material, ft/s	V_c =	1.33
Type of contraction scour for main channel		**Live Bed Scour**
APPROACH LEFT OVERBANK		
User Entered Variables		
Median diameter of bed material, mm	D_{50} =	0.022
Average depth (hydraulic depth) of flow in the left overbank of the approach section, ft	y_1 =	3.41
Average velocity of flow in the left overbank, ft/s	V_1 =	1.11
Calculated Results		
Maximum between Median diameter of bed material and lower limit (0.2 mm), ft	D_{50} =	0.000656
Critical velocity of bed material, ft/s	V_c =	1.19
Type of contraction scour for left overbank		**Clear Water Scour**
APPROACH RIGHT OVERBANK		
User Entered Variables		
Median diameter of bed material, mm	D_{50} =	0.005
Average depth (hydraulic depth) of flow in the right overbank of the approach section, ft	y_1 =	5.66
Average velocity of flow in the right overbank, ft/s	V_1 =	1.55
Calculated Results		
Maximum between Median diameter of bed material and lower limit (0.2 mm), ft	D_{50} =	0.000656
Critical velocity of bed material, ft/s	V_c =	1.30
Type of contraction scour for right overbank		**Live Bed Scour**

Comments (specify cross sections used, parameters estimated, assumptions, etc.):

D50 channel =0.0.28 mm from SB-4, D50 LOB= 0.022 from SB-2, D50 ROB= 0.005 from SB-3.
Minimum D50 of 0.2 mm used in calculations.
Approach Section is XS 2400.2. All y1 and V1 values from Hydraulic Parameters Table.

Received by VMRC September 1, 2020 /blh

Project Name:	Hartland	Discharge Tr:	100-Year
Structure Name:	South Bridge	Engineer:	K.Z.
Stream Name:	North Fork- Broad Run, Trib 1	Date:	02/13/20

Live Bed Contraction Scour - Modified Laursen

MAIN CHANNEL SECTION

$$y_s = y_1 \times \left(\frac{Q_2}{Q_1}\right)^{6/7} \times \left(\frac{W_1}{W_2}\right)^{k_1} - y_o$$

	Description of Variable	Symbol	Value
User Entered Variables			
Approach Section	Slope of energy gradeline of main channel of approach section, ft/ft	S_1 =	0.001088
	Median diameter of bed material, mm	D_{50} =	0.028
	Discharge in the main channel of the approach section, cfs	Q_1 =	1002.06
	Average depth (hydraulic depth) of flow in the main channel of the approach section, ft	y_1 =	6.64
	Bottom (or Top) width of approach main channel, ft	W_1 =	39.80
Bridge Section	Bottom (or Top) width of main channel in bridge section minus piers, ft	W_2 =	22.69
	Discharge in the main channel of the bridge section, cfs	Q_2 =	1269.41
	Existing average depth (hydraulic depth) in the main channel of bridge before scour, ft	y_o =	6.57
Calculated Variables			
	Fall velocity of channel bed material, fps (based on curve fitting to Figure 6.8 for 20° C)	ω =	0.00
	Shear velocity in the approach section main channel, ft/s	V_* =	0.48
	Mode of bed material transport coefficient for the main channel	k_1 =	0.69
Calculated Results			
	Average depth in the main channel of the bridge section after scour, ft	y_2 =	11.98
	Average depth of scour in the main channel of the bridge section, ft	y_s =	**5.41**

Comments (specify cross sections used, parameters estimated, assumptions, etc.):

D50 channel =0.0.28 mm from SB-4. XS 2400.2 is approach section. 2199.95 BR U was used as bridge section.

Top widths used in calculations.
S1,Q1,y1,W1,Q2 ,W2, y0 from Hydraulic Parameters Table. W2 has no piers within it.

Received by VMRC September 1, 2020 /blh

Project Name:	Hartland	Discharge Tr:	100-Year
Structure Name:	South Bridge	Engineer:	K.Z.
Stream Name:	North Fork- Broad Run, Trib 1	Date:	02/13/20

Clear Water Contraction Scour - Laursen

BRIDGE LEFT OVERBANK SETBACK AREA

$$y_s = \left[\frac{0.0077 \times Q_{left}^{\ 2}}{(1.25 \times D_{50})^{2/3} \times W_{contracted}^{\ 2}} \right]^{3/7} - y_o$$

Description of Variable	Symbol	Value
User Entered Variables		
Median diameter of bed material, ft	D_{50} =	0.000656
Discharge in left overbank through bridge, cfs	Q_{left} =	622.26
Bottom width of left overbank flow area at bridge minus pier width(s), ft	$W_{contracted}$ =	47.59
Average depth (hydraulic depth) of flow in the left overbank before scour, ft	y_o =	4.01
Calculated Results		
Average depth of flow in the left overbank of the bridge section after scour, ft	y_2 =	8.57
Average depth of scour in the left overbank of the bridge section, ft	y_s =	**4.56**

Comments (specify cross sections used, parameters estimated, assumptions, etc.):

D50 LOB= 0.022 mm from SB-2. XS 2400.2 is approach section. 2199.95 BR U was used as bridge section.

Top widths used in calculations.

Qleft, Wcontracted (no pier within it), y0 from Hydraulic Parameters Table.

Results not used for scour results velocity was border line and because Live-bed gave larger scour depth.

Received by VMRC September 1, 2020 /blh

Project Name:	Hartland	Discharge Tr:	100-Year
Structure Name:	South Bridge	Engineer:	K.Z.
Stream Name:	North Fork- Broad Run, Trib 1	Date:	02/13/20

Live Bed Contraction Scour - Modified Laursen

LEFT OVERBANK (Check Option for 100-year profile)

$$y_s = y_1 \times \left(\frac{Q_2}{Q_1}\right)^{6/7} \times \left(\frac{W_1}{W_2}\right)^{k_1} - y_o$$

	Description of Variable	Symbol	Value
User Entered Variables			
Approach Section	Slope of energy gradeline of LOB of approach section, ft/ft	S_1 =	0.001088
Approach Section	Median diameter of bed material, mm	D_{50} =	0.0223
Approach Section	Discharge in the LOB of the approach section, cfs	Q_1 =	369.92
Approach Section	Average depth (hydraulic depth) of flow in the LOB of the approach section, ft	y_1 =	3.41
Approach Section	Bottom (or Top) width of approach LOB, ft	W_1 =	97.76
Bridge Section	Bottom (or Top) width of LOB in bridge section minus piers, ft	W_2 =	47.59
Bridge Section	Discharge in the LOB of the bridge section, cfs	Q_2 =	622.26
Bridge Section	Existing average depth (hydraulic depth) of flow in the LOB of bridge before scour, ft	y_o =	4.01
Calculated Variables			
Fall velocity of LOB material, fps (based on curve fitting to Figure 6.8 for 20° C)		ω =	0.00
Shear velocity in the approach section LOB, ft/s		V_* =	0.35
Mode of bed material transport coefficient for the LOB		k_1 =	0.69
Calculated Results			
Average depth in the LOB of the bridge section after scour, ft		y_2 =	8.75
Average depth of scour in the LOB of the bridge section, ft		y_s =	**4.74**

Comments (specify cross sections used, parameters estimated, assumptions, etc.):

D50 LOB= 0.0223 mm from SB-2. XS 2400.2 is approach section. 2199.95 BR U was used as bridge section.

Top widths used in calculations.
S1,Q1,y1,W1,Q2 ,W2, y0 from Hydraulic Parameters Table. W2 has no piers within it. Results used in final results.

Received by VMRC September 1, 2020 /blh

Project Name:	Hartland	Discharge Tr:	100-Year
Structure Name:	South Bridge	Engineer:	K.Z.
Stream Name:	North Fork- Broad Run, Trib 1	Date:	02/13/20

Live Bed Contraction Scour - Modified Laursen

RIGHT OVERBANK

$$y_s = y_1 \times \left(\frac{Q_2}{Q_1}\right)^{6/7} \times \left(\frac{W_1}{W_2}\right)^{k_1} - y_o$$

	Description of Variable	Symbol	Value
User Entered Variables			
Approach Section	Slope of energy gradeline of ROB of approach section, ft/ft	S_1 =	0.001088
	Median diameter of bed material, mm	D_{50} =	0.0054
	Discharge in the ROB of the approach section, cfs	Q_1 =	819.02
	Average depth (hydraulic depth) of flow in the ROB of the approach section, ft	y_1 =	5.66
	Bottom (or Top) width of approach ROB, ft	W_1 =	93.16
Bridge Section			
	Bottom (or Top) width of ROB in bridge section minus piers, ft	W_2 =	25.05
	Discharge in the ROB of the bridge section, cfs	Q_2 =	299.33
	Existing average depth (hydraulic depth) of flow in the ROB of bridge before scour, ft	y_o =	3.52
Calculated Variables			
Fall velocity of ROB material, fps (based on curve fitting to Figure 6.8 for 20° C)		ω =	0.00
Shear velocity in the approach section ROB, ft/s		V_* =	0.45
Mode of bed material transport coefficient for the ROB		k_1 =	0.69
Calculated Results			
Average depth in the ROB of the bridge section after scour, ft		y_2 =	5.91
Average depth of scour in the ROB of the bridge section, ft		y_s =	**2.39**

Comments (specify cross sections used, parameters estimated, assumptions, etc.):

D50 ROB= 0.0054 from SB-3. XS 2400.2 is approach section. 2199.95 BR U was used as bridge section.

Top widths used in calculations.
S1,Q1,y1,W1,Q2 ,W2, y0 from Hydraulic Parameters Table. W2 has no piers within it.

Received by VMRC September 1, 2020 /blh

Project Name:	Hartland	Discharge Tr:	100-Year
Structure Name:	South Bridge	Engineer:	K.Z.
Stream Name:	North Fork- Broad Run, Trib 1	Date:	02/13/20

NCHRP 24-20 Abutment Scour for Conditions (a) & (b)

Left Abutment

$$y_{\max} = \alpha_A y_c \quad or \quad y_{\max} = \alpha_B y_c \quad and \quad y_s = y_{\max} - y_0$$

Description of Variable	Symbol	Value
Common User Entered Variables		
Projected length of left embankment on approach Section, ft	L=	46.72
Width of the left floodplain of approach section, ft	B_f=	97.76
L/Bf <0.75, so scour condition (b) & clear-water contraction scour apply ; provide input variables for Condition (b)		
Condition (b) User Entered Variables	Wingwall	
Left overbank median particle size (a minimum of 0.2 mm is used in calculations), mm	D_{50}=	0.02
Discharge in the LOB of the approach section, cfs	Q_{ob}=	369.92
Unit discharge in the constricted opening accounting for non-uniform flow distribution, cfs/ft	q_{2f} =	13.08
Left abutment flow depth before scour (bridge section at abutment location), ft	y_o=	1.71
Select between spill-through and wingwall abutmenst for clear-water conditions	Wingwall	
Common Calculated Variables		
Ratio of L to B_f	L/B_f=	0.48
Condition (b) Calculated Variables		
Unit discharge in LOB of approach section, cfs/ft	q_f =	3.78
Flow depth including clear-water contraction scour, ft	y_c=	9.29
Ratio of the unit discharges, to enter X-axis on Figure 8.11 or 8.12	q_{2f}/q_f=	3.46
Scour Amplification factor from Figure 8.11 or 8.12	α_B=	1.33
Maximum flow depth resulting from abutment scour, ft	y_{max} =	12.37
Left Abutment scour depth, ft	y_s =	10.66
Final Results		
Maximum flow depth resulting from abutment scour, ft	y_{max} =	12.37
Left Abutment scour depth, ft	**y_s =**	**10.66**

Comments (specify cross sections used, parameters estimated, assumptions, etc.):

D50 LOB= 0.0223 mm from SB-2. XS 2400.2 is approach section.

XS 2199.95 BR U = bridge sec. L from Table of overbank flow obstruction, Bf & Qob from Hydraulic Parameters table.

Set-back L= L bank st.- abut. st. (422.19-374.6), bank stations in model = 47.59'.

Chann Hyd. Depth for BR inside U/S Sec. (XS 2199.95 BR U) in Hydraulic Parameters table = 6.57'.

SBR=Set-back Length/chann Hyd Depth = 47.59/6.57 (from above)= 7.24.

SBR> 5 for both abuts.: Case b (Fig. 8.15 in HEC-18) applies for estimating q2f.

q2f= Overbank (Q/A) x floodplain Hyd. Depth= (622.26/190.83) x 4.01= 13.08 cfs/ft.

"A" from table of Cross Section Output for RS: 2199.95 BR U , Q and Hydr Depth L from Hydraulic Parameters table.

y0 from Flow Tube 1 (adjacent to Abut) for RS: 2199.95 BR U= 1.71'.

Received by VMRC September 1, 2020 /blh

Project Name:	Hartland	Discharge Tr:	100-Year
Structure Name:	South Bridge	Engineer:	K.Z.
Stream Name:	North Fork- Broad Run, Trib 1	Date:	02/13/20

NCHRP 24-20 Abutment Scour for Conditions (a) & (b)

Right Abutment

$$y_{\max} = \alpha_A y_c \quad or \quad y_{\max} = \alpha_B y_c \quad and \quad y_s = y_{\max} - y_0$$

Description of Variable	Symbol	Value
Common User Entered Variables		
Projected length of right embankment on approach Section, ft	L=	74.00
Width of the right floodplain of approach section, ft	B_f=	93.16
L/Bf >=0.75, so scour condition (a) & live-bed contraction scour apply; provide input variables for Condition (a)		
Condition (a) User Entered Variables		
Channel Discharge in the approach section, cfs	Q_1=	1002.06
Average depth (hydraulic depth) of channel flow in the approach section, ft	y_1=	6.64
Channel top width of approach section, ft	W_1 =	39.80
Total Discharge in the bridge opening, cfs	Q=	2191.00
Width of the bridge opening, ft	W=	95.33
Unit discharge in the constricted opening accounting for non-uniform flow distribution, cfs/ft	q_{2c}=	31.70
Average depth (hydraulic depth) of channel flow in the bridge section prior to scour, ft	y_o=	6.57
Select between spill-through and wingwall abutmenst for live-bed conditions	Wingwall	
Common Calculated Variables	Wingwall	
Ratio of L to B_f	L/B_f=	0.79
Condition (a) Calculated Variables		
Unit channel discharge in approach section, cfs/ft	q_1 =	25.18
Flow depth including live-bed contraction scour, ft	y_c=	8.09
Ratio of the unit discharges, to enter X-axis on Figure 8.9 or 8.10	q_2/q_1=	1.26
Scour Amplification factor from Figure 8.9 or 8.10	α_A=	1.76
Maximum flow depth resulting from abutment scour, ft	y_{max} =	14.21
Right Abutment scour depth, ft	y_s =	7.64
Final Results		
Maximum flow depth resulting from abutment scour, ft	y_{max} =	14.21
Right Abutment scour depth, ft	**y_s =**	**7.64**

Comments (specify cross sections used, parameters estimated, assumptions, etc.):

XS 2400.2 is approach section. 2199.95 BR U was used as bridge section.

L from Table of overbank flow obstruction, Bf & Qob from Hydraulic Parameters table.

Set-back L= R Abut Sta- R Bank Sta (469.93-444.88), bank stations in model = 25.05'.

From RD 2199.95 BR U: Q= Qchan+QLOB+QROB=1269.41+622.26+299.33 = 2191 cfs

Chann Hyd. Depth for BR inside U/S Sec. (XS 2199.95 BR U) in Hydraulic Parameters table = 6.57'.

SBR=Set-back Length/chann Hyd Depth = 25.05/6.57 (from above)= 3.81.

SBR<5 so Case c (Fig. 8.16 in HEC-18) applies for estimating q2c.

Q/A= u/s chan Q+ROB Q/(bridge chan A+ ROB A)= (801.89+1334.59)/(148.99+88.25)= 9.0 ft/s.

u/s chan Q & ROB Q from Hydraulic Parameters Table, bridge chan A & ROB A from Cross Section Output for

RS: 2199.95 BR U. q2c= (Q/A) R Hydraulic Depth= 9.01*3.52= 31.70 cfs/ft.

3.52 is the ROB hydraulic depth at RS 2199.95 BR U from Hydraulic Parameters table.

y0 is hydraulic depth at RS 2199.95 BR U from Hydraulic Parameters table= 6.57'.

Received by VMRC September 1, 2020 /blh

500-year Scour Calculations

500-year Hydraulic parameters Table

	User-defined Scour Table HEC-RAS output for the Profile and the Bridge under analysis																Design Discharge Return Period (T 500-Year	
	Reach	River Sta	Profile	W.S. Elev	Hydr Depth C	Hydr Depth L	Hydr Depth R	Vel Chnl	Vel Left	Vel Right	Q Channel	Q Left	Q Right	Top W Act Chan	Top W Act Left	Top W Act Right	Top Wdth Act	E.G. Slope
Section Location				(ft)	(ft)	(ft)	(ft)	(ft/s)	(ft/s)	(ft/s)	(cfs)	(cfs)	(cfs)	(ft)	(ft)	(ft)	(ft)	(ft/ft)
Approach Sec.	Reach1US	2400.2	500YR	306.84	8.83	4.58	7.85	4.56	1.34	1.92	1602.4	777.75	1404.8	39.8	126.63	93.16	259.6	0.001076
U/S of Bridge Sec.	Reach1US	2293.7	500YR	306.55	9.01	6.43	7.47	6.29	2.34	2.64	1285.9	109.12	2390	22.69	7.27	121.04	151	0.002174
BR inside U/S Sec.	Reach1US	2199.95 BR U	500YR	305.42	8.48	5.92	5.43	10.2	4.28	4.57	1957.8	1204.65	622.53	22.69	47.59	25.05	95.33	0.00618
BR inside D/S Sec.	Reach1US	2199.95 BR D	500YR	303.76	6.81	4.26	3.77	13.9	5.41	5.66	2152.8	1097.13	535.03	22.69	47.59	25.05	95.33	0.015473
D/s of Bridge Sec.	Reach1US	2120.49	500YR	303.78	7.1	5.09	5.06	9.43	3.6	3.58	1519.7	689.68	1575.6	22.69	37.63	87.01	147.3	0.006719

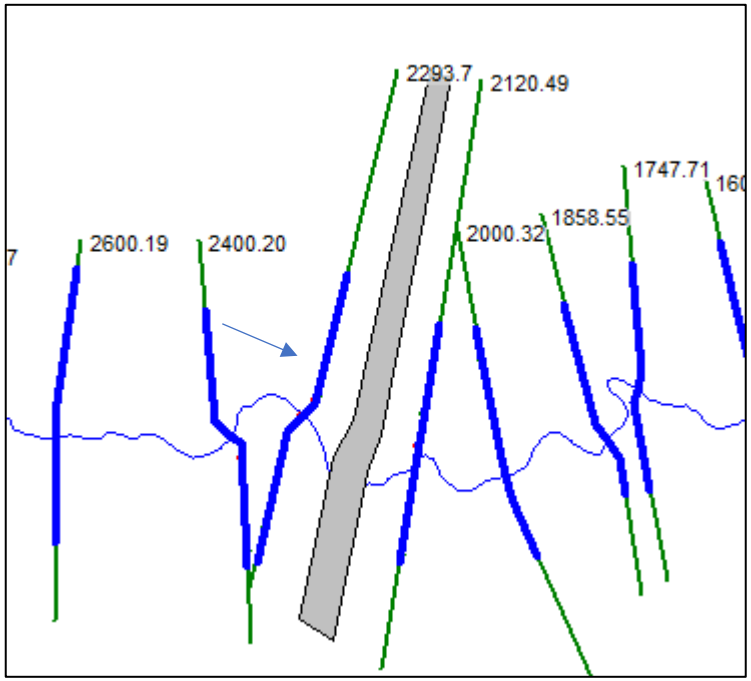

Received by VMRC September 1, 2020 /blh

Flow Tubes for Xsec just u/s of bridge

Plan: Prop Trib 1 NF BRD RN Reach1US RS: 2293.7 Profile: 500YR

	Pos	Left Sta	Right Sta	Flow	Area	W.P.	Percent	Hydr	Velocity	Shear	Power
		(ft)	(ft)	(cfs)	(sq ft)	(ft)	Conv	Depth(ft)	(ft/s)	lb/sq ft	(lb/ft s)
1	LOB	208.2	231.33	0	4.37	11.68	0	0.38	0	0.05	0
2	LOB	231.33	254.47	0	33.02	23.23	0	1.43	0	0.19	0
3	LOB	254.47	277.6	0	72.82	23.21	0	3.15	0	0.43	0
4	LOB	277.6	300.73	0	103.8	23.18	0	4.49	0	0.61	0
5	LOB	300.73	323.87	0	120.7	23.17	0	5.22	0	0.71	0
6	LOB	323.87	347	0	139	23.21	0	6.01	0	0.81	0
7	LOB	347	354.27	109.12	46.73	7.55	2.88	6.43	2.34	0.84	1.96
8	Chan	354.27	376.96	1285.9	204.5	24.77	33.97	9.01	6.29	1.12	7.04
9	ROB	376.96	389.06	220.09	86.04	12.11	5.81	7.11	2.56	0.96	2.47
10	ROB	389.06	401.17	215.68	85.1	12.15	5.7	7.03	2.53	0.95	2.41
11	ROB	401.17	413.27	221.6	86.47	12.14	5.85	7.14	2.56	0.97	2.48
12	ROB	413.27	425.38	227.96	87.89	12.12	6.02	7.26	2.59	0.98	2.55
13	ROB	425.38	437.48	237.24	90.02	12.12	6.27	7.44	2.64	1.01	2.66
14	ROB	437.48	449.58	252.99	93.55	12.11	6.68	7.73	2.7	1.05	2.83
15	ROB	449.58	461.69	249.65	92.8	12.11	6.6	7.67	2.69	1.04	2.8
16	ROB	461.69	473.79	248.84	92.6	12.11	6.57	7.65	2.69	1.04	2.79
17	ROB	473.79	485.9	254.52	93.89	12.11	6.72	7.76	2.71	1.05	2.85
18	ROB	485.9	498	261.41	95.41	12.12	6.91	7.88	2.74	1.07	2.93
19	ROB	498	511.25	0	104	13.29	0	7.85	0	1.06	0
20	ROB	511.25	524.51	0	107.9	13.38	0	8.14	0	1.09	0
21	ROB	524.51	537.76	0	46.9	14.23	0	3.85	0	0.45	0

Plan: Prop Trib 1 NF BRD RN Reach1US RS: 2199.95 BR U Profile: 500YR

	Pos	Left Sta	Right Sta	Flow	Area	W.P.	Percent	Hydr	Velocity	Shear	Power	
		(ft)	(ft)	(cfs)	(sq ft)	(ft)	Conv	Depth(ft)	(ft/s)	lb/sq ft	(lb/ft s)	
1	LOB	365.8	384.6	202.8	36.21	13.63	5.36	3.62	5.6	1.03	5.74	L Abut
2	LOB	384.6	403.39	486.1	120.5	18.8	12.84	6.41	4.03	2.47	9.98	
3	LOB	403.39	422.19	515.8	125	18.83	13.63	6.65	4.13	2.56	10.57	
4	Chan	422.19	444.88	1958	192.4	24.77	51.73	8.48	10.18	3	30.49	
5	ROB	444.88	455.5	281.3	70.48	10.62	7.43	6.63	3.99	2.56	10.22	
6	ROB	455.5	466.13	307.4	56.42	11.91	8.12	5.31	5.45	1.83	9.96	
7	ROB	466.13	476.75	33.82	9.21	6.23	0.89	2.42	3.67	0.57	2.1	R Abut

Received by VMRC September 1, 2020 /blh

Flow Tubes for Approach Xsec

Plan: Prop Trib 1 NF BRD RN Reach1US RS: 2400.20 Profile: 500YR

	Pos	Left Sta	Right Sta	Flow	Area	W.P.	Percent	Hydr	Velocity	Shear	Power	
		(ft)	(ft)	(cfs)	(sq ft)	(ft)	Conv	Depth(ft)	(ft/s)	lb/sq ft	(lb/ft s)	
1	LOB	66.35	79.62	0.46	2.32	7.24	0.01	0.32	0.2	0.02	0	Inactive
2	LOB	79.62	92.89	6.17	14.11	13.3	0.16	1.06	0.44	0.07	0.03	Inactive
3	LOB	92.89	106.15	18.4	27.19	13.31	0.49	2.05	0.68	0.14	0.09	Inactive
4	LOB	106.15	119.42	37.03	41.39	13.33	0.98	3.12	0.89	0.21	0.19	Inactive
5	LOB	119.42	132.69	64.75	57.86	13.32	1.71	4.36	1.12	0.29	0.33	Active
6	LOB	132.69	145.96	92.29	71.54	13.3	2.44	5.39	1.29	0.36	0.47	Active
7	LOB	145.96	159.23	107.7	78.41	13.28	2.84	5.91	1.37	0.4	0.54	Active
8	LOB	159.23	172.5	126.8	86.5	13.29	3.35	6.52	1.47	0.44	0.64	Active
9	LOB	172.5	185.77	149.6	95.55	13.29	3.95	7.2	1.57	0.48	0.76	Active
10	LOB	185.77	199.04	174.6	104.9	13.29	4.61	7.9	1.67	0.53	0.88	Active
11	Chan	199.04	238.84	1602	351.4	40.67	42.34	8.83	4.56	0.58	2.65	Active
12	ROB	238.84	252.15	184	99.09	13.31	4.86	7.45	1.86	0.5	0.93	Active
13	ROB	252.15	265.46	189.4	100.8	13.31	5.01	7.58	1.88	0.51	0.96	Active
14	ROB	265.46	278.77	194.8	102.5	13.31	5.15	7.7	1.9	0.52	0.98	Active
15	ROB	278.77	292.07	202.1	104.8	13.31	5.34	7.88	1.93	0.53	1.02	Active
16	ROB	292.07	305.38	209	106.9	13.31	5.52	8.04	1.95	0.54	1.05	Active
17	ROB	305.38	318.69	215.3	108.9	13.31	5.69	8.18	1.98	0.55	1.09	Active
18	ROB	318.69	332	210.2	108.1	13.54	5.55	8.12	1.95	0.54	1.04	Active
19	ROB	332	344.25	0	63.76	12.74	0	5.2	0	0.34	0	Inactive
20	ROB	344.25	356.51	0	11.87	7.77	0	1.71	0	0.1	0	Inactive

Received by VMRC September 1, 2020 /blh

Projection of abutments upstream

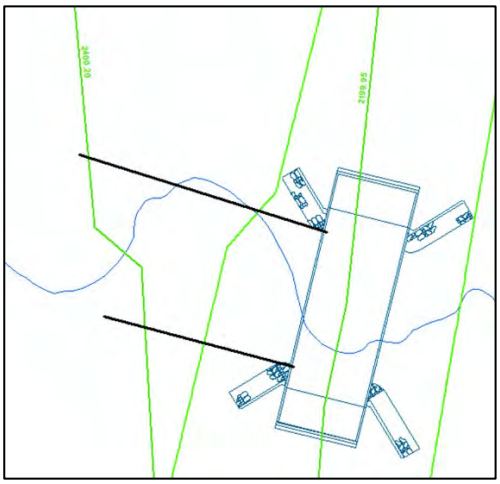

Table of overbank flow obstruction

	Approach Section	
	LOB	ROB
water edge	72.41	332
Projected station of Abut to approach	148	258
Flow in approach section overbank obstructed by abutment	235.65	1114.623
Flow area of approach section overbank obstructed by abutment	226.46	651.1767
Length of embankment projected normal to the flow	75.59	74
Length of active flow obstructed by abutment projected into flow	28.58	74

Cross Section Output for BR U

Plan: Prop Trib 1 NF BRD RN Reach1US RS: 2199.95 BR U Profile: 500YR					
E.G. Elev (ft)	306.4	Element	Left OB	Channel	Right OB
Vel Head (ft)	0.98	Wt. n-Val.	0.09	0.045	0.079
W.S. Elev (ft)	305.42	Reach Len. (ft)	47.6	47.6	47.6
Crit W.S. (ft)	303.64	Flow Area (sq ft)	281.77	192.35	136.11
E.G. Slope (ft/ft)	0.00618	Area (sq ft)	281.77	192.35	136.11
Q Total (cfs)	3785	Flow (cfs)	1204.65	1957.82	622.53
Top Width (ft)	95.33	Top Width (ft)	47.59	22.69	25.05
Vel Total (ft/s)	6.2	Avg. Vel. (ft/s)	4.28	10.18	4.57
Max Chl Dpth (ft)	10.46	Hydr. Depth (ft)	5.92	8.48	5.43
Conv. Total (cfs)	48145.3	Conv. (cfs)	15323.2	24903.5	7918.6
Length Wtd. (ft)	47.6	Wetted Per. (ft)	51.26	24.77	28.75
Min Ch El (ft)	294.96	Shear (lb/sq ft)	2.12	3	1.83
Alpha	1.63	Stream Power (lb/ft s)	9.07	30.49	8.35
Frctn Loss (ft)	0.44	Cum Volume (acre-ft)	19.96	10.85	18.02
C & E Loss (ft)	0.28	Cum SA (acres)	5.29	1.52	4.11

Received by VMRC September 1, 2020 /blh

Project Name:	Hartland	Discharge Tr:	500-Year
Structure Name:	South Bridge	Engineer:	K.Z.
Stream Name:	North Fork- Broad Run, Trib 1	Date:	02/13/20

Type of Contraction Scour

$$V_c = 11.17 \times y_1^{1/6} \times D_{50}^{1/3}$$

Description of Variable	Symbol	Value
APPROACH MAIN CHANNEL		
User Entered Variables		
Median diameter of bed material, mm	D_{50} =	0.028
Average depth (hydraulic depth) of flow in the main channel of the approach section, ft	y_1 =	8.83
Average velocity of flow in the main channel, ft/s	V_1 =	4.56
Calculated Results		
Maximum between Median diameter of bed material and lower limit (0.2 mm), ft	D_{50} =	0.000656
Critical velocity of bed material, ft/s	V_c =	1.40
Type of contraction scour for main channel		**Live Bed Scour**
APPROACH LEFT OVERBANK		
User Entered Variables		
Median diameter of bed material, mm	D_{50} =	0.022
Average depth (hydraulic depth) of flow in the left overbank of the approach section, ft	y_1 =	4.58
Average velocity of flow in the left overbank, ft/s	V_1 =	1.34
Calculated Results		
Maximum between Median diameter of bed material and lower limit (0.2 mm), ft	D_{50} =	0.000656
Critical velocity of bed material, ft/s	V_c =	1.25
Type of contraction scour for left overbank		**Live Bed Scour**
APPROACH RIGHT OVERBANK		
User Entered Variables		
Median diameter of bed material, mm	D_{50} =	0.005
Average depth (hydraulic depth) of flow in the right overbank of the approach section, ft	y_1 =	7.85
Average velocity of flow in the right overbank, ft/s	V_1 =	1.92
Calculated Results		
Maximum between Median diameter of bed material and lower limit (0.2 mm), ft	D_{50} =	0.000656
Critical velocity of bed material, ft/s	V_c =	1.37
Type of contraction scour for right overbank		**Live Bed Scour**

Comments (specify cross sections used, parameters estimated, assumptions, etc.):

D50 channel =0.0.28 mm from SB-4, D50 LOB= 0.022 from SB-2, D50 ROB= 0.005 from SB-3.
Minimum D50 of 0.2 mm used in calculations.
Approach Section is XS 2400.2. All y1 and V1 values from Hydraulic Parameters Table.

Received by VMRC September 1, 2020 /blh

Project Name:	Hartland	Discharge Tr:	500-Year
Structure Name:	South Bridge	Engineer:	K.Z.
Stream Name:	North Fork- Broad Run, Trib 1	Date:	02/13/20

Live Bed Contraction Scour - Modified Laursen

MAIN CHANNEL SECTION

$$y_s = y_1 \times \left(\frac{Q_2}{Q_1}\right)^{6/7} \times \left(\frac{W_1}{W_2}\right)^{k_1} - y_o$$

	Description of Variable	Symbol	Value
	User Entered Variables		
Approach Section	Slope of energy gradeline of main channel of approach section, ft/ft	S_1 =	0.001076
Approach Section	Median diameter of bed material, mm	D_{50} =	0.028
Approach Section	Discharge in the main channel of the approach section, cfs	Q_1 =	1602.42
Approach Section	Average depth (hydraulic depth) of flow in the main channel of the approach section, ft	y_1 =	8.83
Approach Section	Bottom (or Top) width of approach main channel, ft	W_1 =	39.80
Bridge Section	Bottom (or Top) width of main channel in bridge section minus piers, ft	W_2 =	22.69
Bridge Section	Discharge in the main channel of the bridge section, cfs	Q_2 =	1957.82
Bridge Section	Existing average depth (hydraulic depth) in the main channel of bridge before scour, ft	y_o =	8.48
	Calculated Variables		
	Fall velocity of channel bed material, fps (based on curve fitting to Figure 6.8 for 20° C)	ω =	0.00
	Shear velocity in the approach section main channel, ft/s	V_* =	0.55
	Mode of bed material transport coefficient for the main channel	k_1 =	0.69
	Calculated Results		
	Average depth in the main channel of the bridge section after scour, ft	y_2 =	15.45
	Average depth of scour in the main channel of the bridge section, ft	y_s =	**6.97**

Comments (specify cross sections used, parameters estimated, assumptions, etc.):

D50 channel =0.0.28 mm from SB-4. XS 2400.2 is approach section. 2199.95 BR U was used as bridge section.

Top widths used in calculations.
S1,Q1,y1,W1,Q2 ,W2, y0 from Hydraulic Parameters Table. W2 has no piers within it.

Received by VMRC September 1, 2020 /blh

Project Name:	Hartland	Discharge Tr:	500-Year
Structure Name:	South Bridge	Engineer:	K.Z.
Stream Name:	North Fork- Broad Run, Trib 1	Date:	02/13/20

Live Bed Contraction Scour - Modified Laursen

LEFT OVERBANK

$$y_s = y_1 \times \left(\frac{Q_2}{Q_1}\right)^{6/7} \times \left(\frac{W_1}{W_2}\right)^{k_1} - y_o$$

	Description of Variable	Symbol	Value
User Entered Variables			
Approach Section	Slope of energy gradeline of LOB of approach section, ft/ft	S_1 =	0.001076
Approach Section	Median diameter of bed material, mm	D_{50} =	0.0223
Approach Section	Discharge in the LOB of the approach section, cfs	Q_1 =	777.75
Approach Section	Average depth (hydraulic depth) of flow in the LOB of the approach section, ft	y_1 =	4.58
Approach Section	Bottom (or Top) width of approach LOB, ft	W_1 =	126.63
Bridge Section	Bottom (or Top) width of LOB in bridge section minus piers, ft	W_2 =	47.59
Bridge Section	Discharge in the LOB of the bridge section, cfs	Q_2 =	1204.65
Bridge Section	Existing average depth (hydraulic depth) of flow in the LOB of bridge before scour, ft	y_o =	5.92
Calculated Variables			
	Fall velocity of LOB material, fps (based on curve fitting to Figure 6.8 for 20° C)	ω =	0.00
	Shear velocity in the approach section LOB, ft/s	V_* =	0.40
	Mode of bed material transport coefficient for the LOB	k_1 =	0.69
Calculated Results			
	Average depth in the LOB of the bridge section after scour, ft	y_2 =	13.09
	Average depth of scour in the LOB of the bridge section, ft	y_s =	**7.17**

Comments (specify cross sections used, parameters estimated, assumptions, etc.):

D50 LOB= 0.0223 mm from SB-2. XS 2400.2 is approach section. 2199.95 BR U was used as bridge section.

Top widths used in calculations.

S1,Q1,y1,W1,Q2 ,W2, y0 from Hydraulic Parameters Table. W2 has no piers within it.

Received by VMRC September 1, 2020 /blh

Project Name:	Hartland	Discharge Tr:	500-Year
Structure Name:	South Bridge	Engineer:	K.Z.
Stream Name:	North Fork- Broad Run, Trib 1	Date:	02/13/20

Live Bed Contraction Scour - Modified Laursen

RIGHT OVERBANK

$$y_s = y_1 \times \left(\frac{Q_2}{Q_1}\right)^{6/7} \times \left(\frac{W_1}{W_2}\right)^{k_1} - y_o$$

	Description of Variable	Symbol	Value
	User Entered Variables		
Approach Section	Slope of energy gradeline of ROB of approach section, ft/ft	S_1 =	0.001076
Approach Section	Median diameter of bed material, mm	D_{50} =	0.0054
Approach Section	Discharge in the ROB of the approach section, cfs	Q_1 =	1404.83
Approach Section	Average depth (hydraulic depth) of flow in the ROB of the approach section, ft	y_1 =	7.85
Approach Section	Bottom (or Top) width of approach ROB, ft	W_1 =	93.16
Bridge Section			
Bridge Section	Bottom (or Top) width of ROB in bridge section minus piers, ft	W_2 =	25.05
Bridge Section	Discharge in the ROB of the bridge section, cfs	Q_2 =	622.53
Bridge Section	Existing average depth (hydraulic depth) of flow in the ROB of bridge before scour, ft	y_o =	5.43
	Calculated Variables		
	Fall velocity of ROB material, fps (based on curve fitting to Figure 6.8 for 20° C)	ω =	0.00
	Shear velocity in the approach section ROB, ft/s	V_* =	0.52
	Mode of bed material transport coefficient for the ROB	k_1 =	0.69
	Calculated Results		
	Average depth in the ROB of the bridge section after scour, ft	y_2 =	9.67
	Average depth of scour in the ROB of the bridge section, ft	y_s =	**4.24**

Comments (specify cross sections used, parameters estimated, assumptions, etc.):

D50 ROB= 0.0054 from SB-3. XS 2400.2 is approach section. 2199.95 BR U was used as bridge section.

Top widths used in calculations.

S1,Q1,y1,W1,Q2 ,W2, y0 from Hydraulic Parameters Table. W2 has no piers within it.

Received by VMRC September 1, 2020 /blh

Project Name:	Hartland	Discharge Tr:	500-Year
Structure Name:	South Bridge	Engineer:	K.Z.
Stream Name:	North Fork- Broad Run, Trib 1	Date:	02/13/20

NCHRP 24-20 Abutment Scour for Conditions (a) & (b)

Left Abutment

$$y_{\max} = \alpha_A y_c \quad or \quad y_{\max} = \alpha_B y_c \quad and \quad y_s = y_{\max} - y_0$$

Description of Variable	Symbol	Value
Common User Entered Variables		
Projected length of left embankment on approach Section, ft	L=	75.59
Width of the left floodplain of approach section, ft	B_f=	126.63
L/Bf <0.75, so scour condition (b) & clear-water contraction scour apply ; provide input variables for Condition (b)		
Condition (b) User Entered Variables	Wingwall	
Left overbank median particle size (a minimum of 0.2 mm is used in calculations), mm	D_{50}=	0.02
Discharge in the LOB of the approach section, cfs	Q_{ob}=	777.75
Unit discharge in the constricted opening accounting for non-uniform flow distribution, cfs/ft	q_{2f} =	25.31
Left abutment flow depth before scour (bridge section at abutment location), ft	y_o=	3.62
Select between spill-through and wingwall abutmenst for clear-water conditions	Wingwall	
Common Calculated Variables		
Ratio of L to B_f	L/B_f=	0.60
Condition (b) Calculated Variables		
Unit discharge in LOB of approach section, cfs/ft	q_f =	6.14
Flow depth including clear-water contraction scour, ft	y_c=	16.36
Ratio of the unit discharges, to enter X-axis on Figure 8.11 or 8.12	q_{2f}/q_f=	4.12
Scour Amplification factor from Figure 8.11 or 8.12	α_B=	1.21
Maximum flow depth resulting from abutment scour, ft	y_{max} =	19.73
Left Abutment scour depth, ft	y_s =	16.11
Final Results		
Maximum flow depth resulting from abutment scour, ft	y_{max} =	19.73
Left Abutment scour depth, ft	**y_s =**	**16.11**

Comments (specify cross sections used, parameters estimated, assumptions, etc.):

D50 LOB= 0.0223 mm from SB-2. XS 2400.2 is approach section.

XS 2199.95 BR U = bridge sec. L from Table of overbank flow obstruction, Bf & Qob from Hydraulic Parameters table.

Set-back L= L bank st.- abut. st. (422.19-374.6), bank stations in model = 47.59'.

Chann Hyd. Depth for BR inside U/S Sec. (XS 2199.95 BR U) in Hydraulic Parameters table = 8.48'.

SBR=Set-back Length/chann Hyd Depth = 47.59/8.48 (from above)= 5.61.

SBR> 5 for both abuts.: Case b (Fig. 8.15 in HEC-18) applies for estimating q2f.

q2f= Overbank (Q/A) x floodplain Hyd. Depth= (1204.65/281.77) x 5.92= 25.31 cfs/ft.

"A" from table of Cross Section Output for RS: 2199.95 BR U , Q and Hydr Depth L from Hydraulic Parameters table.

y0 from Flow Tube 1 (adjacent to Abut) for RS: 2199.95 BR U= 3.62'.

Received by VMRC September 1, 2020 /blh

Project Name:	Hartland	Discharge Tr:	500-Year
Structure Name:	South Bridge	Engineer:	K.Z.
Stream Name:	North Fork- Broad Run, Trib 1	Date:	02/13/20

NCHRP 24-20 Abutment Scour for Conditions (a) & (b)

Right Abutment

$$y_{\max} = \alpha_A y_c \quad or \quad y_{\max} = \alpha_B y_c \quad and \quad y_s = y_{\max} - y_0$$

Description of Variable	Symbol	Value
Common User Entered Variables		
Projected length of right embankment on approach Section, ft	L=	74.00
Width of the right floodplain of approach section, ft	B_f=	93.16
L/Bf >=0.75, so scour condition (a) & live-bed contraction scour apply; provide input variables for Condition (a)		
Condition (a) User Entered Variables		
Channel Discharge in the approach section, cfs	Q_1=	1602.42
Average depth (hydraulic depth) of channel flow in the approach section, ft	y_1=	8.83
Channel top width of approach section, ft	W_1 =	39.80
Total Discharge in the bridge opening, cfs	Q=	3785.00
Width of the bridge opening, ft	W=	95.33
Unit discharge in the constricted opening accounting for non-uniform flow distribution, cfs/ft	q_{2c}=	60.77
Average depth (hydraulic depth) of channel flow in the bridge section prior to scour, ft	y_o=	8.48
Select between spill-through and wingwall abutmenst for live-bed conditions	Wingwall	
Common Calculated Variables	Wingwall	
Ratio of L to B_f	L/B_f=	0.79
Condition (a) Calculated Variables		
Unit channel discharge in approach section, cfs/ft	q_1 =	40.26
Flow depth including live-bed contraction scour, ft	y_c=	12.57
Ratio of the unit discharges, to enter X-axis on Figure 8.9 or 8.10	q_2/q_1=	1.51
Scour Amplification factor from Figure 8.9 or 8.10	α_A=	1.58
Maximum flow depth resulting from abutment scour, ft	y_{max} =	19.88
Right Abutment scour depth, ft	y_s =	11.40
Final Results		
Maximum flow depth resulting from abutment scour, ft	y_{max} =	19.88
Right Abutment scour depth, ft	**y_s =**	**11.40**

Comments (specify cross sections used, parameters estimated, assumptions, etc.):

XS 2400.2 is approach section. 2199.95 BR U was used as bridge section.

L from Table of overbank flow obstruction, Bf & Qob from Hydraulic Parameters table.

Set-back L= R Abut Sta- R Bank Sta (469.93-444.88), bank stations in model = 25.05'.

From RD 2199.95 BR U: Q= Qchan+QLOB+QROB=1957.82+1204.65+622.53= 3785 cfs

Chann Hyd. Depth for BR inside U/S Sec. (XS 2199.95 BR U) in Hydraulic Parameters table =8.48'.

SBR=Set-back Length/chann Hyd Depth = 25.05/8.48 (from above)= 2.95.

SBR<5 so Case c (Fig. 8.16 in HEC-18) applies for estimating q2c.

Q/A= u/s chan Q+ROB Q/(bridge chan A+ ROB A)= (1285.9+2389.98)/(192.35+136.11)= 11.19 ft/s.

u/s chan Q & ROB Q from Hydraulic Parameters Table, bridge chan A & ROB A from Cross Section Output for

RS: 2199.95 BR U. q2c= (Q/A) R Hydraulic Depth= 11.19*5.43= 60.77 cfs/ft.

5.43 is the ROB hydraulic depth at RS 2199.95 BR U from Hydraulic Parameters table.

y0 is hydraulic depth of channel at RS 2199.95 BR U from Hydraulic Parameters table= 8.48'.

Received by VMRC September 1, 2020 /blh